Vigilohm IM10 and IM20

Insulation monitoring device

User manual

VIGED310022EN-06
11/2025

www.se.com

Legal Information

The information provided in this document contains general descriptions, technical characteristics and/or recommendations related to products/solutions.

This document is not intended as a substitute for a detailed study or operational and site-specific development or schematic plan. It is not to be used for determining suitability or reliability of the products/solutions for specific user applications. It is the duty of any such user to perform or have any professional expert of its choice (integrator, specifier or the like) perform the appropriate and comprehensive risk analysis, evaluation and testing of the products/solutions with respect to the relevant specific application or use thereof.

The Schneider Electric brand and any trademarks of Schneider Electric SE and its subsidiaries referred to in this document are the property of Schneider Electric SE or its subsidiaries. All other brands may be trademarks of their respective owner.

This document and its content are protected under applicable copyright laws and provided for informative use only. No part of this document may be reproduced or transmitted in any form or by any means (electronic, mechanical, photocopying, recording, or otherwise), for any purpose, without the prior written permission of Schneider Electric.

Schneider Electric does not grant any right or license for commercial use of the document or its content, except for a non-exclusive and personal license to consult it on an "as is" basis.

Schneider Electric reserves the right to make changes or updates with respect to or in the content of this document or the format thereof, at any time without notice.

To the extent permitted by applicable law, no responsibility or liability is assumed by Schneider Electric and its subsidiaries for any errors or omissions in the informational content of this document, as well as any non-intended use or misuse of the content thereof.

Safety information

Important information

Read these instructions carefully and look at the equipment to become familiar with the device before trying to install, operate, service, or maintain it. The following special messages may appear throughout this manual or on the equipment to warn of potential hazards or to call attention to information that clarifies or simplifies a procedure.

The addition of either symbol to a “Danger” or “Warning” safety label indicates that an electrical hazard exists which will result in personal injury if the instructions are not followed.

This is the safety alert symbol. It is used to alert you to potential personal injury hazards. Obey all safety messages that accompany this symbol to avoid injury or death.

⚠⚠DANGER

DANGER indicates a hazardous situation which, if not avoided, **will result in** death or serious injury.

Failure to follow these instructions will result in death or serious injury.

⚠WARNING

WARNING indicates a hazardous situation which, if not avoided, **could result in** death or serious injury.

⚠CAUTION

CAUTION indicates a hazardous situation which, if not avoided, **could result in** minor or moderate injury.

NOTICE

NOTICE is used to address practices not related to physical injury.

Please note

Electrical equipment should be installed, operated, serviced, and maintained only by qualified personnel. No responsibility is assumed by Schneider Electric for any consequences arising out of the use of this equipment. A qualified person is one who has skills and knowledge related to the construction, installation, and operation of electrical equipment and has received safety training to recognize and avoid the hazards involved.

About the document

This manual discusses features of the Vigilohm IM10 and IM20 insulation monitoring devices (IMDs) and provides installation, commissioning, and configuration instructions.

This manual is intended for use by designers, panel builders, installers, system integrators, and maintenance technicians who are related with ungrounded electrical distribution systems featuring insulation monitoring devices (IMDs).

Throughout the manual, the term “IMD” and “device” refers to Vigilohm IM10 and IM20. All differences between the models, such as a feature specific to one model, are indicated with the appropriate model number or description.

This manual assumes you have an understanding of insulation monitoring and are familiar with the equipment and power system in which your device is installed.

Please contact your local Schneider Electric representative to learn what additional training opportunities are available for your devices.

Make sure you are using the most up-to-date version of your device’s firmware in order to access the latest features.

The most up-to-date documentation for your device is available for download from www.se.com.

Validity note

The characteristics of the products described in this document are intended to match the characteristics that are available on www.se.com. As part of our corporate strategy for constant improvement, we may revise the content over time to enhance clarity and accuracy. If you see a difference between the characteristics in this document and the characteristics on www.se.com, consider www.se.com to contain the latest information.

Product related information

Refer to the chapter Safety precautions for the product related safety messages.

General Cybersecurity Information

In recent years, the growing number of networked machines and production plants has seen a corresponding increase in the potential for cyber threats, such as unauthorized access, data breaches, and operational disruptions. You must, therefore, consider all possible cybersecurity measures to help protect assets and systems against such threats.

To help keep your Schneider Electric products secure and protected, it is in your best interest to implement the cybersecurity best practices as described in the Cybersecurity Best Practices document.

Schneider Electric provides additional information and assistance:

- Subscribe to the Schneider Electric security newsletter.
- Visit the Cybersecurity Support Portal web page to:
  - Find Security Notifications.
  - Report vulnerabilities and incidents.
- Visit the Schneider Electric Cybersecurity and Data Protection Posture web page to:
  - Learn more about cybersecurity in the Cybersecurity Academy.
  - Explore the cybersecurity services from Schneider Electric.

Product related cybersecurity information

To help reduce the threat of cyber attacks on your (equipment/devices) systems, organizations, and networks from cyber attack threats requires multi-layered cyber risk mitigation measures, early detection of incidents, and appropriate response and recovery plans when incidents occur. For more information about cybersecurity, refer to the Cybersecurity Guidelines.

⚠ WARNING

POTENTIAL COMPROMISE OF SYSTEM AVAILABILITY, INTEGRITY, AND CONFIDENTIALITY

- Change default passwords/passcodes/PIN codes to help prevent unauthorized access to device settings and information.
- Disable unused ports/services and default accounts, where possible, to minimize pathways for malicious attacks.
- Place networked devices behind multiple layers of cyber defenses (such as firewalls, network segmentation, and network intrusion detection and protection).
- Use cybersecurity best practices (for example: least privilege, separation of duties) to help prevent unauthorized exposure, loss, modification of data and logs, interruption of services, or unintended operation.

Failure to follow these instructions can result in death, serious injury, or equipment damage.

Environmental data

For product compliance and environmental information, refer to the Schneider Electric Environmental Data Program.

Available languages of the document

This document is available in these languages:

- English: VIGED310022EN
- French: VIGED310022FR
- Spanish: VIGED310022ES
- German: VIGED310022DE
- Italian: VIGED310022IT
- Portuguese: VIGED310022PT
- Russian: VIGED310022RU
- Chinese: VIGED310022ZH

Related documents

Document	Number
Instruction Sheet: Vigilohm IM10 Insulation Monitoring Device	BBV35440
Instruction Sheet: Vigilohm IM20 Insulation Monitoring Device	BBV35475
Vigilohm Catalog	PLSED310020EN, PLSED310020FR
The IT earthing system: a solution to improve industrial electrical network availability - Application guide	PLSED110006EN
Système de liaison à la terre IT - Une solution pour améliorer la disponibilité des réseaux électriques dans l'industrie - Guide d'application	PLSED110006FR
System earthings in LV Les schémas des liaisons à la terre en BT (régimes du neutre)	Cahier technique n° 172
The IT system earthing (unearthed neutral) in LV Le schéma IT (à neutre isolé) des liaisons à la terre en BT	Cahier technique n° 178

To find documents online, visit the Schneider Electric download center (www.se.com/ww/en/download/).

Trademarks

Schneider Electric is a trademark or registered trademark of Schneider Electric in France, the USA, and other countries.

Table of Contents

Safety precautions 9
Cybersecurity 11
- Overview 11
- Product defense-in-depth 11
- Protected environment assumptions 11
- Hardening 12
- Reporting a security incident or vulnerability 12
- Firmware upgrades 12
- Secure boot 12
- Secure disposal guidelines 13

Introduction 14
- Ungrounded power system overview 14
- Insulation resistance (R) monitoring 14
- Leakage capacitance (C) monitoring 14
- Device overview 15
- Device features 15
- Hardware overview 15
- Supplemental information 16
- Accessories 17

Description 20
- Dimensions 20
- Flush-mounting and dismounting 20
- DIN rail mounting and dismounting 22
- Wiring diagram 23
- Example application: Ungrounded power system insulation monitoring 24
- Example application: Ungrounded power system insulation monitoring and the alarm output is sent to a supervisor 25
- Example application for IM20: Ungrounded power system insulation monitoring connected to a communication network 25

Functions 27
- Insulation measurements 27
- Monitoring system insulation 29
- Insulation alarm relay acknowledgement (**Ack Al. Relay**) 33
- Additional setup parameters for IM20 34
- Injection exclusion 34
- Example: injection exclusion with multiple interconnected incoming feeders 36
- Reset 37
- Self-test 38

Human Machine Interface (HMI) 39
- Vigilohm IM10 menu 39
- Vigilohm IM20 menu 39
- Display interface 40
- Navigation buttons and icons 41
- Information icons 41
- Status screens 42

Parameter modification using the display....44
Date/Time....45
Log....45
Communication....47
Communication parameters....47
Modbus functions....47
Modbus register table format....48
Modbus registers table....48
Alarm event records....53
Date and time (TI081 format)....55
Configuring IM20 series device using PowerLogic™ ION Setup....57
Overview....57
Setting up a network site....57
Adding IM20 series device to a site....58
IM20 series configuration screens....58
Configuring the clock parameters (Date/Time)....58
Configuring the front panel display settings....59
Configuring the I/O configuration parameters....60
Configuring the insulation alarm setup....60
Generating the device configuration reports....60
Configuring the device resets....61
Configuring the transformer setup....61
Maintenance....62
Disconnected injection detection....62
ON light indicator....63
Troubleshooting....63
Specifications....64
China Standard Compliance....66

Safety precautions

Installation, wiring, testing and service must be performed in accordance with all local and national electrical codes.

Specific hazard associated with Insulation Monitoring Devices (IMDs)

Insulation monitoring devices are connected to the system via an injection wire, which must be disconnected before carrying out any kind of work on the product.

⚠⚠DANGER

HAZARD OF ELECTRIC SHOCK, EXPLOSION, OR ARC FLASH

Disconnect the injection wire from the device to the monitored system before working on the device or equipment.

Failure to follow these instructions will result in death or serious injury.

Other safety measures

⚠⚠DANGER

HAZARD OF ELECTRIC SHOCK, EXPLOSION, OR ARC FLASH

- Apply appropriate Personal Protective Equipment (PPE) and follow safe electrical work practices. See NFPA 70E, CSA Z462 or other local standards.
- Turn off all power supplying this device and the equipment in which it is installed before working on or in the equipment.
- Always use a properly rated voltage sensing device to confirm that all power is off.
- Assume communications and I/O wiring are hazardous live until determined otherwise.
- Do not exceed the maximum ratings of this device.
- Disconnect all the device's input and output wires before performing dielectric (hi-pot) or Megger testing.
- Never shunt an external fuse or circuit breaker.

Failure to follow these instructions will result in death or serious injury.

NOTE: See IEC 60950-1, Annex W for more information on communications and I/O wiring connected to multiple devices.

⚠WARNING

UNINTENDED OPERATION

Do not use this device for critical control or protection of persons, animals, property or equipment.

Failure to follow these instructions can result in death, serious injury, or equipment damage.

NOTICE

EQUIPMENT DAMAGE

- Do not open the device case.
- Do not attempt to repair any components of the device.

Failure to follow these instructions can result in equipment damage.

Cybersecurity

Overview

Modbus is an unencrypted communication protocol. RS-485 cannot transmit encrypted data using communication protocol.

⚠ WARNING

POTENTIAL COMPROMISE OF SYSTEM AVAILABILITY, INTEGRITY, AND CONFIDENTIALITY

- Do not allow unauthorized users to access your network.
- All transmitted information is encrypted.
- Regularly update and patch your network security systems.
- Monitor network activity for any suspicious behavior.

Failure to follow these instructions can result in death, serious injury, or equipment damage.

To avoid malicious use of the sensitive information that will be transmitted through an internal network, follow the instructions:

- Segment the network physically or logically..
- Restrict access to the network using standard controls such as firewalls.
- For transmitting data over an external network, encrypt protocol transmissions over all external connections using an encrypted tunnel, TLS wrapper or a similar solution.

Product defense-in-depth

Use a layered network approach with multiple security and defense controls in your IT and control system to minimize data protection gaps, helps reduce single-point-of-failure and create a strong cybersecurity posture. The more layers of security in your network, the harder it is to breach defenses, take digital assets or cause disruption.

Place the device behind a secure firewall to protect against unauthorized access and potential cyber threats.

Protected environment assumptions

- Cybersecurity governance – available and up-to-date guidance on governing the use of information and technology assets in your company.
- Perimeter security – installed devices, and devices that are not in service, are in an access-controlled or monitored location.
- Emergency power – the control system provides the capability to switch to and from an emergency power supply without affecting the existing security state or a documented degraded mode.
- Firmware upgrades – device upgrades are implemented consistently to the current version of firmware.
- Controls against malware – detection, prevention, and recovery controls to help protect against malware are implemented and combined with appropriate user awareness.

- Physical network segmentation – the control system provides the capability to:
  - Physically segment control system networks from non-control system networks.
  - Physically segment critical control system networks from non-critical control system networks.

Hardening

Recommendations to optimize cybersecurity in a protected environment:

- Harden the device according to your company policies and standards.
- Review assumptions about protected environments and address potential risks and mitigation strategies.
- Least functionality can be applied to prohibit and restrict the use of unnecessary functions, protocols and/or services.
- Change the communication protocol ports from their default values. This lowers the predictability of port use.
- Disable communication protocol ports when they are not in use. This reduces the attack surface.

Reporting a security incident or vulnerability

To report suspicious activity or a cybersecurity incident, go to the Schneider Electric Report an Incident website.

To report a security vulnerability affecting your product or solution, go to the Schneider Electric Report a Vulnerability website.

Firmware upgrades

When device firmware is upgraded - security configuration remains the same until changed, including user names and passwords/passcodes. It is recommended to review security configuration after an upgrade to analyze privileges for new or changed device features and revoke or apply them according to your company policies and standards.

Secure boot

Secure boot is a security feature built to ensures that only trusted and authenticated software is allowed to run during the system startup process.

- Secure boot verifies the digital signatures of firmware drivers, bootloaders, and operating system components before executing them. It allows only software signed with trusted keys to run.
- Secure boot blocks unauthorized or malicious code at the firmware level and helps prevent rootkits and pre-boot malware attacks.

Signed firmware update

Signed firmware update is a security mechanism which ensures that only verified and authorized firmware updates are installed.

Secure disposal guidelines

Use the *Secure disposal checklist* when disposing a device to help prevent potential disclosure of data.

Introduction

Ungrounded power system overview

Ungrounded power system is an earthing system, which increases continuity of service of power systems and protection of people and property.

This system must be monitored with specific device to meet specific applications, such as hospital, naval applications and others where safety and continuity of service must be ensured even in case of earth fault. Lastly, this system is chosen in certain cases because it can facilitate preventive and corrective maintenance operations.

The system transformer's neutral is isolated from earth, while the electrical load frames are earthed. First fault occurs there is no loop for shorting current to flow, allowing the system to continue to operate normally without hazard to people and equipment. However, the faulty circuit must be detected and repaired before a second fault occurs. Because this system can tolerate an initial fault, maintenance operations have to be conducted as soon as possible to prevent the system trip in case a second earth fault occurs.

Insulation resistance (R) monitoring

Ungrounded power system require insulation monitoring to identify when the first insulation fault has occurred.

The installation must either be ungrounded or must be grounded through the specific ZX impedence (Commercial Reference: 50159).

In the event of only one earth fault, the fault current is very low and interruption is unnecessary. However, given that a second fault could potentially cause the circuit breaker to trip, an insulation monitoring device has to be installed to indicate the initial fault. This device triggers an audible and/or a visual signal.

By constantly monitoring the insulation resistance, you can keep track of the system quality, which is a form of preventive maintenance.

Leakage capacitance (C) monitoring

Ungrounded power systems is adversely affected by leakage capacitance.

Ungrounded power system must meet the following conditions to ensure protection from indirect contact:

$R_A \times I_d \leq 50$ V AC and $R_A \times I_d < 120$ V DC

- R_A is the resistance value of the equipment grounding connection, in Ohms.
- I_d is the ground fault current, in Amps.
- 50 V is the maximum acceptable voltage for indirect contacts.

For a three-phase ungrounded power system, the indirect contact fault current I_d is:

$I_d = 2\pi \times F \times C \times V$

- F is the frequency of the power system.
- C is the earth leakage capacitance.
- V is the phase-to-neutral voltage.

Combining these, the ungrounded power system must meet the following condition:

$2\pi \times F \times C \times V \times R_A \leq 50$ V

It is important that the equipment grounds have low resistance, and that the ungrounded power system leakage capacitance must be monitored and kept to a low value.

For more information, see Cahier Technique No. 178.

Device overview

The device is a digital insulation monitoring device (IMD) for low-voltage ungrounded power systems. The device monitors the insulation of a power system and notifies any insulation faults as soon as they occur.

IMD applies low-frequency AC voltage between the power system and the ground to provide accurate insulation monitoring in complex applications. The insulation is then assessed on the basis of the current value returned. This method is used for all power system types - AC, DC, combined, rectified, with a variable speed drive, etc.

IM10 and IM20 offers the following features:

- Insulation resistance display (R)
- Detection of insulation faults in accordance with a configurable threshold

IM20 offers these additional features:

- Leakage capacitance display (C) with associated impedance (Zc)
- Communication via the Modbus RS-485 protocol
- Injection inhibition via logic input
- Insulation fault log

Device features

The features supported depend on the device model.

Function	IM10	IM20
Measurement and display of ungrounded system insulation resistance	√	√
Measurement and display of leakage capacitance (C)	–	√
Calculation of impedance Zc associated with C	–	√
Time-tagged insulation fault log	–	√
Communication via Modbus RS-485	–	√
Injection inhibition input	–	√
High-voltage adapter compatibility	–	√

Hardware overview

IM10 and IM20 feature 3 and 5 terminal blocks respectively (identifiers A to E).

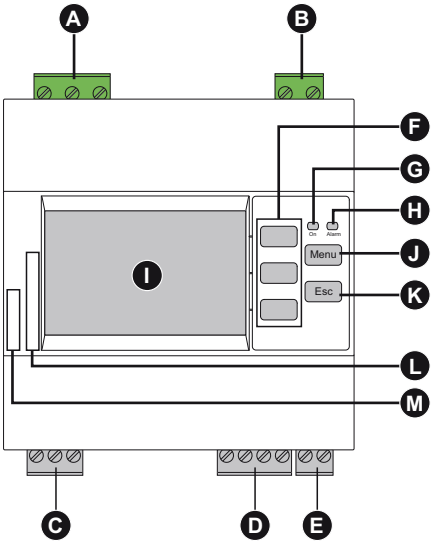

A	Injection connection terminal block
B	Auxiliary power supply connection terminal block
C	Insulation alarm relay terminal block
D	Modbus communication terminal block (IM20)
E	Injection inhibition input terminal block (IM20)
F	Contextual menu buttons
G	Operating LED
H	Insulation alarm LED
I	Display
J	**Menu** button to go to the main menu
K	**Esc** button to return to the previous menu or cancel a parameter entry
L	Serial number
M	Product catalog number (IMD-IM10 or IMD-IM20)

Device commercial reference

Model	Commercial reference
IM10	IMD-IM10
IM20	IMD-IM20

Supplemental information

This document should be used along with the instruction sheet included in the box with your device and accessories.

See your device's instruction sheet for information related to installation.

See your product's catalog pages at www.se.com for information about your device, its options, and accessories.

You can download updated documentation from www.se.com or contact your local Schneider Electric representative for the latest information about your product.

Accessories

Accessories are required depending on the type of installation on which the device is installed.

Accessories list

Accessory	IM10	IM20	Catalog number
Cardew C “440 V” surge limiter	Yes	Yes	50171
Cardew C “660 V” surge limiter	—	Yes (1)	50172
Cardew C “1000 V” surge limiter	—	Yes (1)	50183
Cardew C base	Yes (2)	Yes (2)	50169
ZX impedance (limiting impedance)	Yes	Yes	50159
High voltage adaptor (IM20—1700)	—	Yes	IMD-IM20–1700

Cardew C surge limiter

Function	Cardew C is used if the insulation monitoring device is connected to the secondary connection of an MV/LV transformer (according to the rules and conventions that apply in the various countries). It protects the low-voltage (LV) installation against over voltage hazards. It is connected to the secondary connection of the transformer. Cardew C can be used on the following systems: • U < 1000 V AC • U < 300 V DC			
Selection table	**Un: Nominal Phase-to-Phase Voltage of AC System**		**Ui: Arcing Voltage**	**Type of Cardew C**
	Accessible neutral	Not accessible neutral		
	380 V < U ≤ 660 V	220 V < U ≤ 380 V	700 V < Ui ≤ 1,100 V	440 V
	660 V < U ≤ 1,000 V	380 V < U ≤ 660 V	1,100 V < Ui ≤ 1,600 V	660 V
	1,000 V < U ≤ 1,560 V	660 V < U ≤ 1,000 V	1,600 V < Ui ≤ 2,400 V	1,000 V
Dimensions	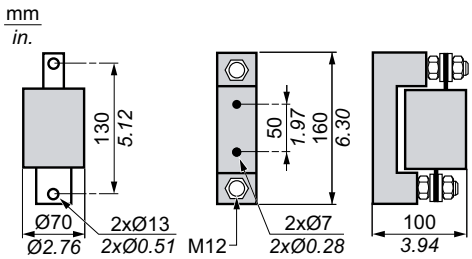			

(1) Compatible with IM20 used with a IM20-1700 high voltage adaptor.
(2) Compatible with all Cardew C catalog numbers

Mounting	• Cardew C mounted directly on busbars • Mounting with plate-mounted base
Connection	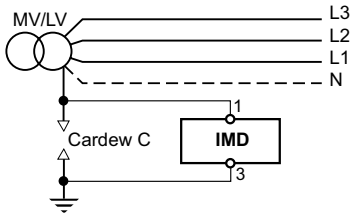

ZX limiting impedance

Function	ZX limiting impedance enables you to create an installation with a high-impedance grounded neutral system (1500 Ω at 50 Hz). ZX limiting impedance can be used on the following systems: • Umax = 480 V AC • Umax = 345 V DC
Dimensions	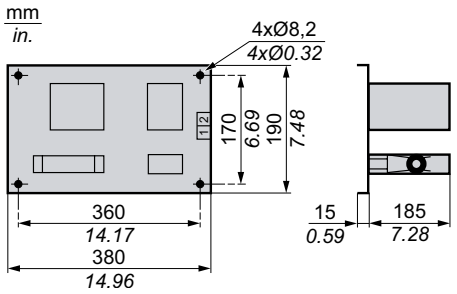
Mounting	On mounting plate
Connection	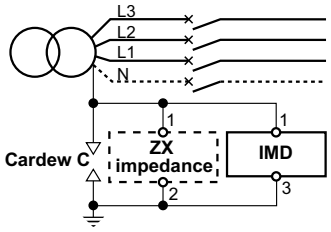

High voltage adaptor

Function	The high voltage adaptor (IMD-IM20-1700) can be used to connect a IMD to ungrounded systems higher than 480 V AC (connection with 400 V cable).
Dimensions	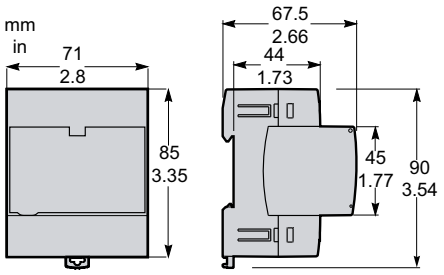
Mounting	On DIN rail

Connection	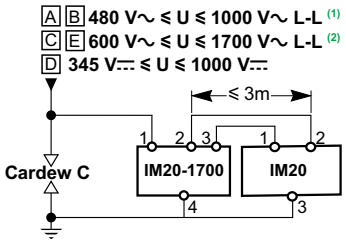
	(1) Voltage adaptor connected to a phase (2) Voltage adaptor connected to neutral

Description

Dimensions

Device dimensions and cut-out for flush mount is illustrated in the following figure:

NOTE: All dimensions are measured in mm (in).

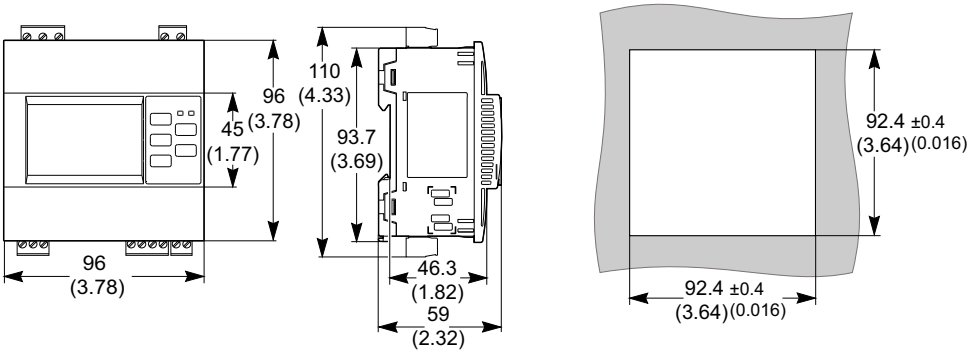

Observe the correct distances between devices for flush-mounting as per the following figure:

NOTE: All dimensions are measured in mm (in).

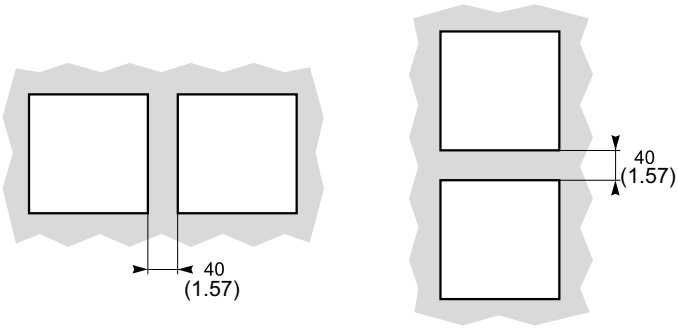

Flush-mounting and dismounting

You can attach the device to any flat, rigid vertical support using the 3 spring clips supplied. You must not tilt the device after installation. To free up space for control gear, you can attach the device to the front panel of the floor-standing or wall-mounted enclosure.

Mounting

Before installing the device, check the following:

- The mounting plate must have a thickness of between 0.8 (0.03) and 3.2 (0.13) mm (in).
- A square measuring 92 (3.62) x 92 (3.62) mm (in) must be cut out from the plate so the device can be installed.
- No terminal blocks may be connected to the unit.

1. Insert the device in the cut-out in the mounting plate by tilting the device forward slightly.

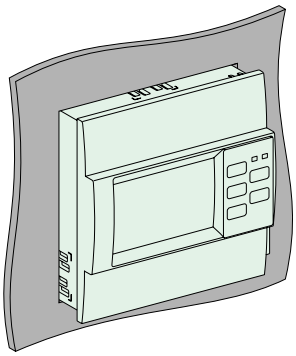

2. Depending on the thickness of the mounting plate, clip the 3 spring clips into the fixing slots on the device as follows:

Mounting plate thickness	Fixing slots to be used
0.8 mm ≤ X ≤ 2 mm (0.031 in ≤ X ≤ 0.079 in)	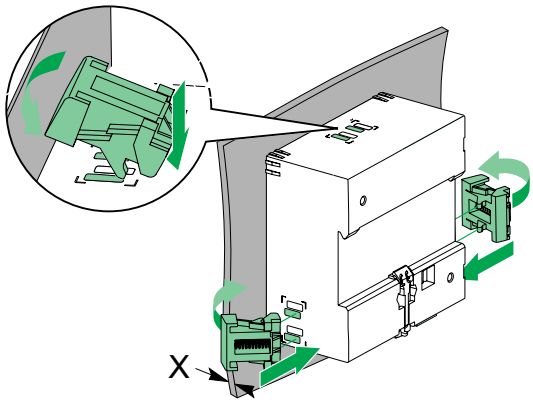
2 mm < X ≤ 3.2 mm (0.079 in < X ≤ 0.126 in)	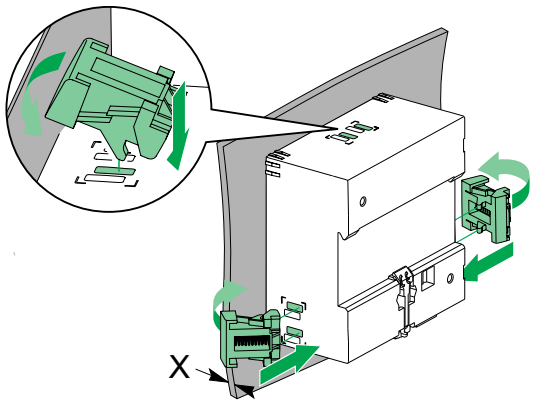

3. Do the wiring and insert the terminal blocks as shown in the relevant wiring diagram (See Wiring diagram, page 23) and as appropriate for the type of device concerned (See Hardware overview, page 15).

Dismounting

1. Disconnect the terminal blocks from the device.

2. Insert the blade of a screwdriver between the spring clip and the device and use the screwdriver as a lever to release the spring clip.

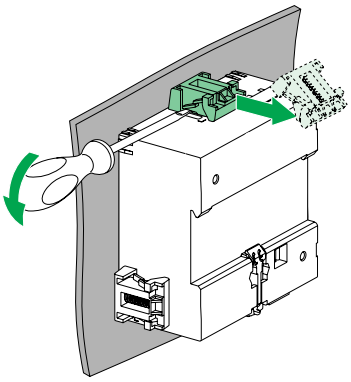

NOTE: Perform this step for remaining 2 spring clips.

3. Remove the device from the mounting plate.

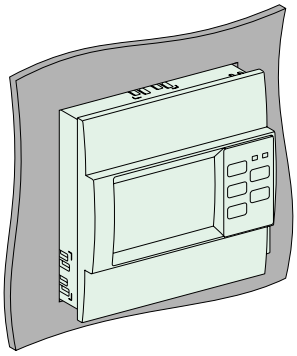

4. Reinsert the terminal blocks and make sure that the correct positions on the device are observed (See Hardware overview, page 15).

DIN rail mounting and dismounting

You can install the device on a DIN rail. The device must not be tilted after installation.

Mounting

1. Position the upper slots on the rear of the device on the DIN rail.
2. Press the device against the DIN rail until the locking mechanism engages.

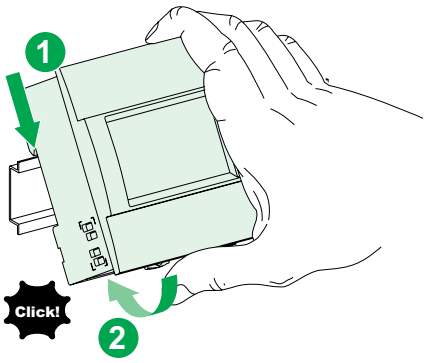

The device is fixed to the rail.

3. Do the wiring and insert the terminal blocks as shown in the relevant wiring diagram (See Wiring diagram, page 23) and as appropriate for the type of device concerned (See Hardware overview, page 15).

Dismounting

1. Disconnect the terminal blocks from the device.
2. Use a flat screwdriver (≤ 6.5 mm (0.26 in)) and push down the locking mechanism to release the device.

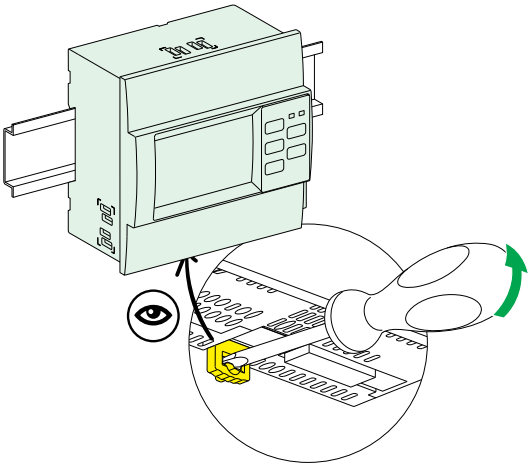

3. Lift the device up to free it from the DIN rail.

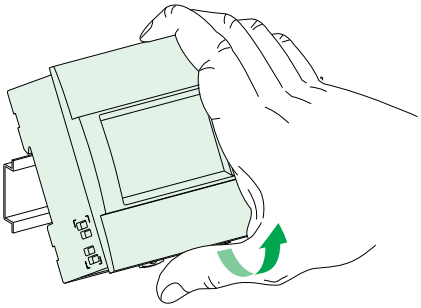

4. Reinsert the terminal blocks and make sure that the correct positions on the device are observed (See Hardware overview, page 15).

Wiring diagram

All the device wiring terminals have identical wiring capabilities. The following are the list of characteristics of the cables that can be used to connect the terminals:

- Stripped length: 7 mm (0.28 in)
- Cable cross sectional area: 0.2 to 2.5 mm^2 (24 to 14 AWG)
- Tightening torque: 0.8 N.m (7.1 lb-in)
- Type of screwdriver: Flat, 3 mm (0.12 in)

The illustration shows the connection of the device to a single-phase or three-phase 3- or 4-wire power system, or a DC power system.

Wiring diagram of IM10 / IM20:

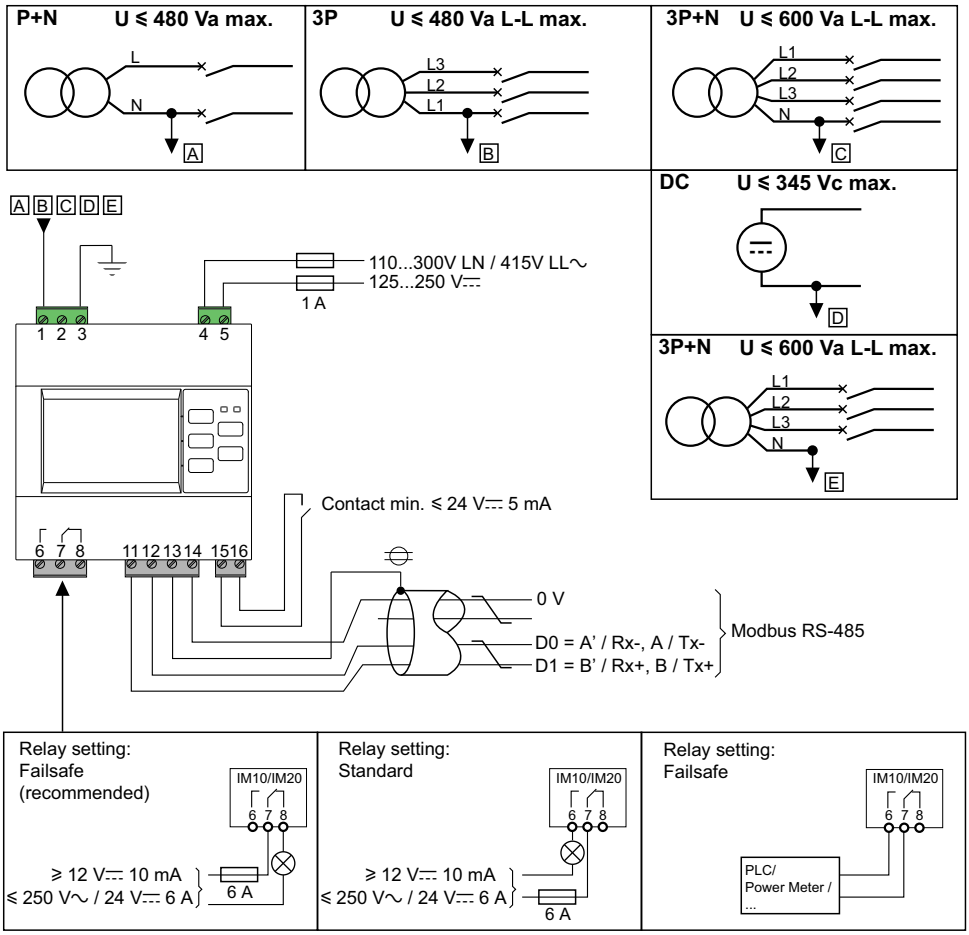

NOTE: Terminals 11 to 16 are not available on IM10.

Example application: Ungrounded power system insulation monitoring

You can use an IMD to monitor an ungrounded power system.

An ungrounded power system is a system involving the use of a transformer whose neutral is not connected to ground.

The insulation is monitored by an IMD having the following characteristics:

- It is generally powered by the system that it monitors.
- It is connected to neutral (or to one phase) and ground.
- Its only setting is the fault threshold level.
- It has a single relay output to a light or a buzzer.

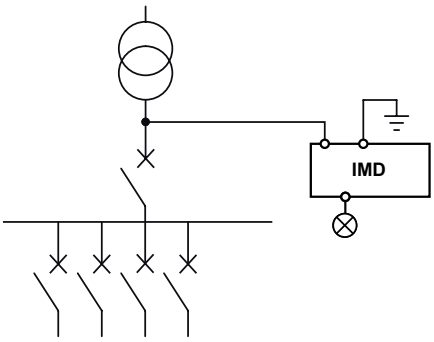

Example application: Ungrounded power system insulation monitoring and the alarm output is sent to a supervisor

You can use an IMD to monitor an ungrounded power system and send the alarm to a supervisor.

An ungrounded power system is a system involving the use of a transformer whose neutral is not connected to ground.

The insulation is monitored by an IMD whose insulation alarm output is connected to an available input on a networked device (For example: PLC). This device is connected to a supervisor via a communication network.

NOTE: In this scenario, only the insulation alarm information is available to the supervisor.

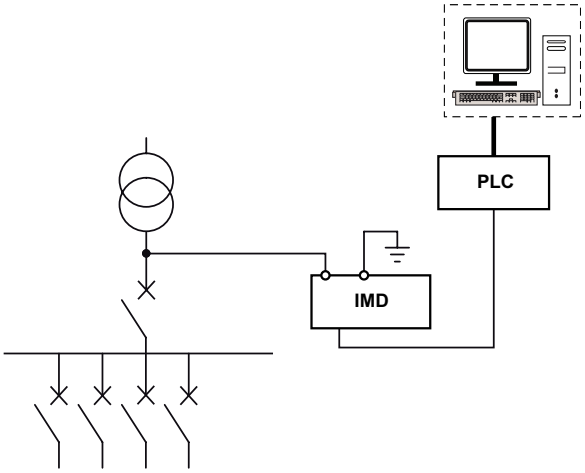

Example application for IM20: Ungrounded power system insulation monitoring connected to a communication network

You can use an IMD to monitor an ungrounded power system and remotely provide display and configuration functionality.

An ungrounded power system is a system involving the use of a transformer whose neutral is not connected to ground.

When the IMD is linked to the supervisor via a Modbus connection, the following actions are supported:

- Display: The product status, the status of the insulation alarm (active, inactive, acknowledged), details of the last 30 time-tagged events, the values for R, C and Zc in order to create tables or curves for monitoring these values over variable periods
- Configure the product remotely. All the settings can be accessed remotely, with the exception of the Modbus parameters.

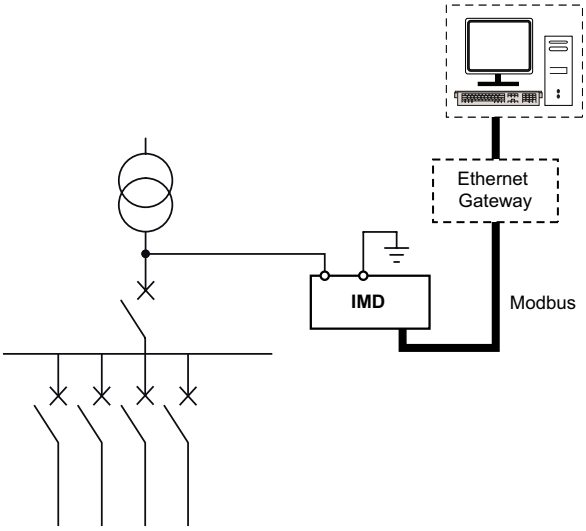

NOTE: Using an Ethernet gateway enables you to make use of an existing Ethernet network.

Functions

Insulation measurements

Your device is designed to monitor the IT system insulation and continuously measure R, which is the insulation resistance (kΩ)

The IM20 also measures C, which is the leakage capacitance to the distribution system (µF), and calculates the impedance Z_C (kΩ) associated with C.

R measurement accuracy

When measuring the insulation resistance R, a high degree of accuracy is not required because the aim is merely to detect a fault, which is identified by a very large decrease in the insulation value.

In practice, the level of accuracy remains good across the normal usage range. Although it deteriorates outside of this range, there should be no impact as far as the user is concerned.

R and C measurement scenarios

The resistance and capacitance of your power system affects your device's measurements.

The diagram below shows the insulation resistance R and the leakage capacitance C of the power system.

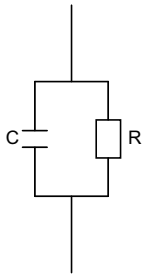

The following situations may occur on an installation. The gray arrows represent the preferred route for the IMD injection signal.

R and C value	Equivalent circuit diagram	Impact on measurements	Significance of R	Significance of C
R Weak (in the event of a fault)	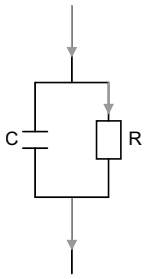	Most of the injection signal goes into R. Throughout the duration of the insulation fault, the R measurement is inaccurate. Measuring C is difficult, particularly if C is weak.	Significant measurement for the installation.	Obtaining a measurement of C is of no significance when there is an insulation fault.
Medium C, medium R	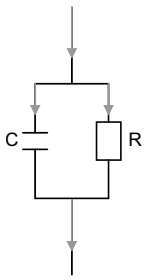	The injection signal is shared between R and C. R and C can be measured correctly.	Significant measurement for the installation.	Significant measurement for the installation.
R and C high	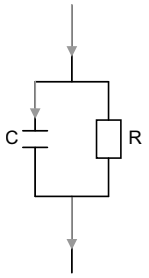	The injection signal that goes into R is weak. It becomes difficult to measure R and is completely impossible in the case of very high C values. C is measured correctly.	Obtaining an accurate measurement of R is not important, as the system is in good condition.	Significant measurement for the installation. An excessively high C value corresponds to the maximum limits of an IT system. Above 60 µF (150 µF with filtering of 160 seconds), the product is outside of its operating range and fails.

Accuracy zone

Your device's insulation resistance measurement accuracy varies based on the system's capacitance as well as temperature and humidity.

Your device's accuracy at 25°C (77°F) and 40% relative humidity.

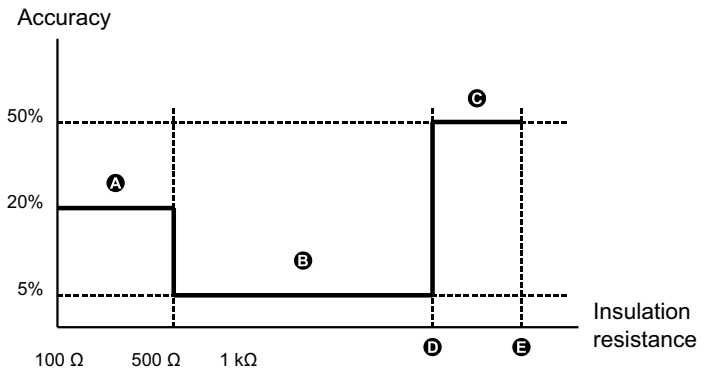

A	Zone A: Accuracy is 20% ± 1 digit
B	Zone B: Accuracy is 5% ± 1 digit
C	Zone C: Accuracy is 50% ± 1 digit
D	Resistance at accuracy zone limit τ_1
E	Resistance at accuracy zone limit τ_2 (10 MΩ maximum)

Assuming two significant digits for insulation resistance measurements the accuracy can be calculated.

- Zone A: At 250 Ω, 20% = 50, ± 1 digit = 10. Displayed value will range from 190 Ω to 310 Ω, for an overall accuracy of approximately ± 25%.
- Zone B: At 1 kΩ, 5% = 50 Ω, ± 1 digit = 100. Displayed value will range from 1.8 kΩ to 1.2 kΩ, for an overall accuracy of approximately ± 20%.

- Zone C: At 3 MΩ, 50% = 1.5 MΩ, ± 1 digit = 100 kΩ. Displayed value will range from 1.4 MΩ to 4.6 MΩ, for an overall accuracy of approximately ± 50%

Calculation of resistance for accuracy zone limits τ_1, τ_2

τ = R (MΩ) x C(µF)

The accuracy of your device transitions at specific τ values, identified by testing at different resistances and capacitances, and is also influenced by the filtering (measurement sample duration) selected.

- For filtering of 4 seconds, τ_1 = 1, τ_2 = 4
- For filtering of 40 seconds or 160 seconds, τ_1 = 2, τ_2 = 10

Resistance at τ_1 and τ_2 with 4 second filtering

τ_1 = 1	τ_2 = 4
Capacitance = 1 µF , τ_1/C = 1/1 µF = 1MΩ Resistance at τ_1 = 1 MΩ	Capacitance = 1 µF , τ_2/C = 4\1 µF = 4MΩ Resistance at τ_2 = 4MΩ
Capacitance = 10 µF , τ_1/C = 1/10 µF = 100 kΩ Resistance at τ_1 = 100 kΩ	Capacitance = 10 µF , τ_2/C = 4/10 µF = 400 kΩ Resistance at τ_2 = 400 kΩ
Accuracy zone B (5%) range is approximately	

Resistance at τ_1 and τ_2 with 40 second and 160 second filtering

τ_1 = 2	τ_2 = 10
Capacitance = 1 µF , τ_1/C = 2/1 µF = 2MΩ Resistance at τ_1 = 2MΩ	Capacitance = 1 µF , τ_2/C = 10\1 µF = 10 MΩ Resistance at τ_2 = 10 MΩ
Capacitance = 10 µF , τ_1/C = 2/10 µF = 200 kΩ Resistance at τ_1 = 200 kΩ	Capacitance = 10 µF , τ_2/C = 10/10 µF = 1 MΩ Resistance at τ_2 = 1 MΩ

Monitoring system insulation

The device monitors the ungrounded power system insulation in resistance in accordance with the following timing diagram which represents the default settings:The device monitors the ungrounded power system insulation in resistance in accordance with the following timing diagram when the locating signal is available:

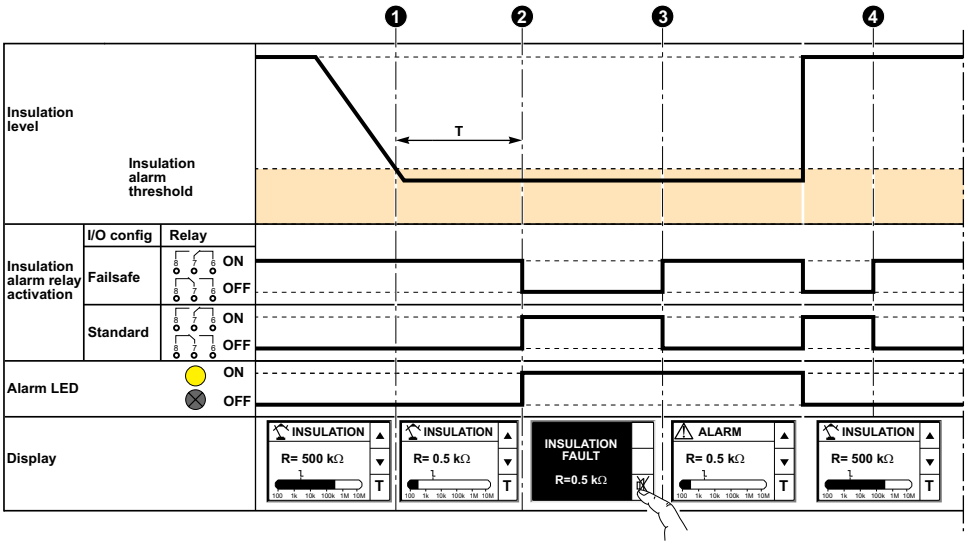

1	An insulation fault is detected in the power system.
2	Once T has elapsed (alarm time delay), the device switches to the insulation alarm status. The insulation alarm relay changes over and the alarm LED lights up.
3	Press the button to acknowledge the insulation alarm. The insulation alarm relay reverts to its initial status. See Relay Mode, page 32 for more information on relay modes. See Relay Acknowledgement, page 33 for more information on relay acknowledgement.
4	The device reverts to normal status.

If you don't acknowledge the insulation alarm state, and the insulation rises again above the insulation alarm threshold, then the insulation fault is recorded as transient.

Operating and alarm LED information

The two bi-color indicator lights on the front panel indicate the device's current status.

ON LED	Alarm LED	Description
		Device powered off
flashes slowly		Device powered on, no insulation fault detected
flashes slowly		Device powered on, prev. alarm detected
flashes slowly		Device powered on, insulation fault detected
flashes slowly	flashes	Device powered on, transient insulation fault detected
		Device powered on but malfunctioning

Insulation alarm (Ins. Alarm) and preventive insulation alarm (Prev. Alarm) thresholds

You can set the insulation alarm and preventive insulation alarm threshold values as per the level of insulation of the application you monitor.

Parameter	Allowed Values	Default Value
Ins. Alarm (Insulation alarm threshold)	**0.5...500 kΩ**	**1 kΩ**
Prev. Alarm (Preventive insulation alarm threshold)	**1 kΩ...1 MΩ**	**Inactive**

When the device is powered up, it retrieves the last preventive insulation alarm and insulation alarm threshold values recorded.

NOTE: The preventive insulation alarm threshold must always be higher than the insulation alarm threshold.

An insulation alarm is cleared when the insulation level reaches 20% above the threshold.

Insulation alarm and preventive insulation alarm threshold hysteresis

A hysteresis is applied to limit the error in the insulation alarm due to fluctuations in the measurement when approaching threshold value.

A hysteresis principle is applied:

- When the insulation value measured decreases and falls below the setting threshold, the insulation alarm or preventive insulation alarm is triggered or the countdown is started if an insulation alarm time delay has been set.
- When the insulation value measured increases and exceeds 1.2 times the set threshold (i.e. the setting threshold +20%), the insulation alarm or the preventive insulation alarm is deactivated.

The following diagrams show the behaviors:

- Without hysteresis:

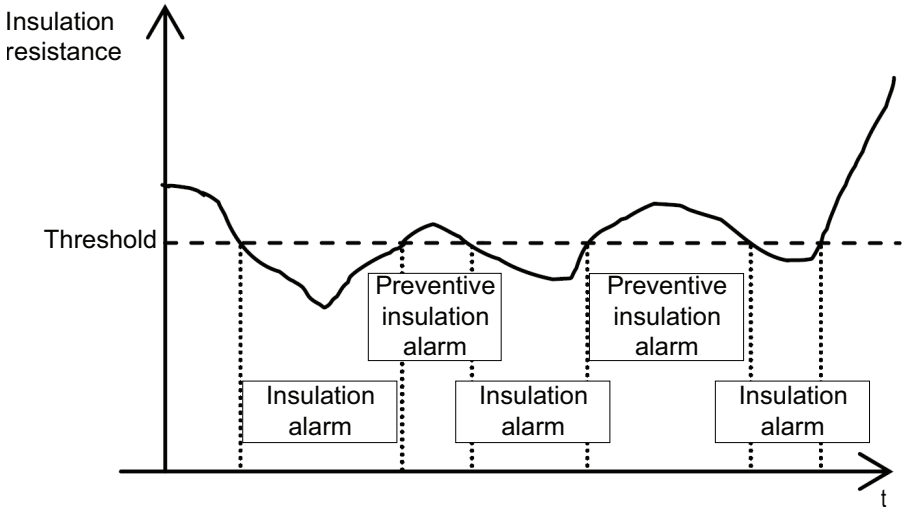

- With hysteresis:

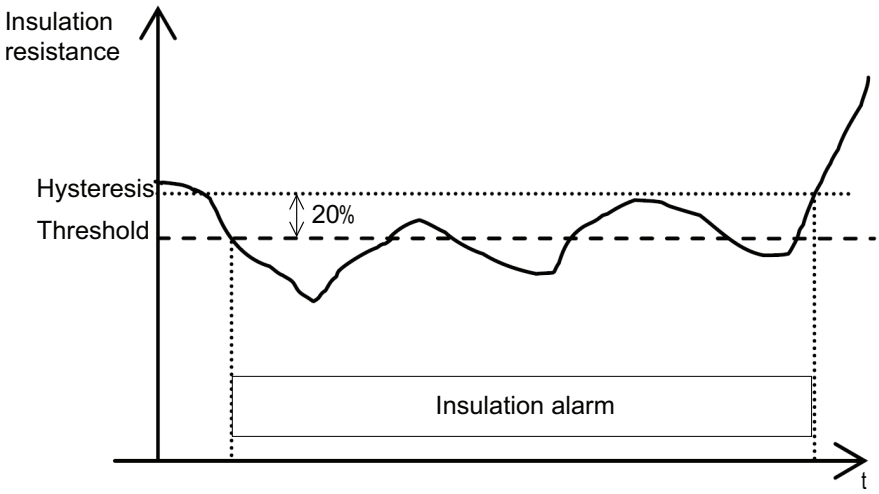

Measurement filtering

Measurement filtering averages values over a configurable period of time.

On a system, the measurement varies continuously depending on the following:

- Number of loads

- Type of loads
- Load switching
- Size of the system (effect of C)

To prevent the display from fluctuating and to avoid inappropriate alarms, the measurements are filtered for 4 s, 40 s or 160 s.

The **Filtering** parameter offers a choice between the following three modes:

Filtering	Description	Example of use	Measurement update time when monitoring the insulation	Response time required to detect an insulation fault
4 s	Optimizes the response time: • Manual fault location phase • Automatic location of a transient fault	To facilitate manual location of a fault by opening each of the circuit breakers in turn	0.8 s	4 s
40 s	Suitable for most applications	–	8 s	40 s
160 s	Suitable for highly demanding applications	To be used for severely disrupted power supply systems or for photovoltaic applications	32 s	160 s

The default value for the **Filtering** parameter is 40 s.

Insulation alarm time delay (Ins. Al. Delay)

In some applications you might want to delay the triggering of an alarm while certain machines are starting up, otherwise erroneous alarms could be triggered. You can set the threshold delay to filter these erroneous alarms.

The threshold delay is time filter. This delay can be used in harsh electrical systems to avoid false insulation alarms. The device does not report insulation fault that do not remain for a duration longer than the delay set up.

The allowed values for this parameter are from **0 s** to **120 min**. The default value is **0 s**.

Insulation alarm relay (Ins. Al. Relay)

You can set the insulation alarm relay mode depending on the status of insulation.

To access the setting, select **Menu > Settings > I/O Config**.

- Parameter: **Relay**
- Allowed values: **FS** / **Std.**
- Default: **FS**

The insulation alarm relay is deactivated (de-energized) in the following cases:

- Insulation fault has been detected.
- The product has a malfunction.
- The auxiliary voltage of the power supply is accidentally lost.
- This makes it easier to locate the fault when using the method that involves opening each of the circuit breakers in turn. Given that the circuit breakers may be located at some distance from the device, the audible signal allows you to identify and locate the fault from a distance.

Insulation alarm relay acknowledgement (Ack Al. Relay)

You can set the insulation alarm relay acknowledgment as per the usage of loads connected to the relay.

When the relays are connected to loads (for example, horns or lamps), it is advised to turn off these external signaling devices before the insulation level rises back to a level above the setup thresholds. This can be done by pressing the acknowledge button while in insulation alarm state.

In certain system configurations, it is required to prevent this type acknowledgement and only retrigger the relays when the insulation level rises above the setup thresholds. This is done by changing the corresponding parameter.

The allowed values for this parameter are **ON** and **OFF**. The default value is **ON**.

To set the acknowledge alarm relay ON, select **Menu > Settings > I/O Config > Ack Al. Relay > ON**.

To set the acknowledge alarm relay OFF, select **Menu > Settings > I/O Config > Ack Al. Relay > OFF**.

The device monitors the ungrounded power system insulation in accordance with the following timing diagram:

Acknowledge alarm relay ON

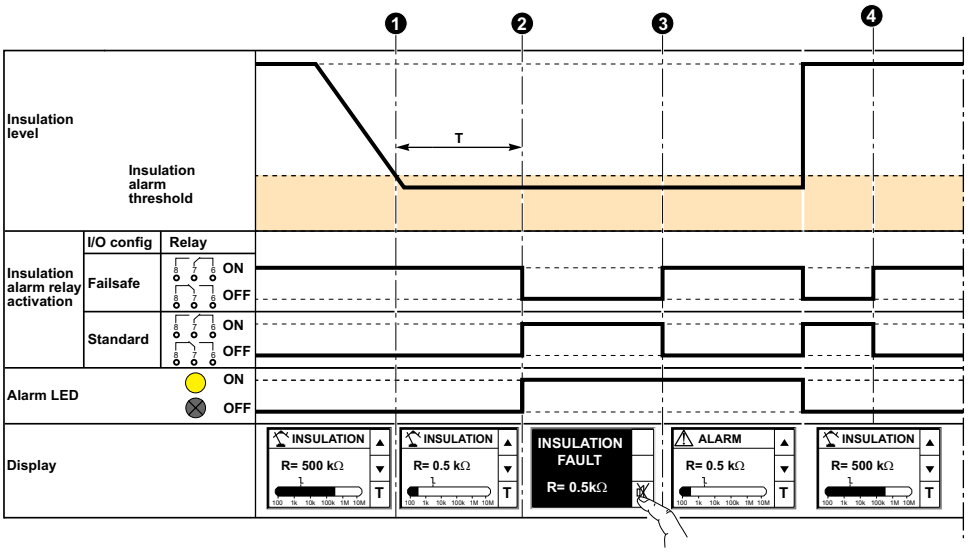

1	An insulation fault is detected in the power system.
2	Once T has elapsed (alarm time delay), the device switches to the insulation alarm status. The insulation alarm relay changes over and the alarm LED lights up.
3	Press the button to acknowledge the insulation alarm. The insulation alarm relay reverts to its initial status.
4	The device reverts to normal status.

Acknowledge alarm relay OFF

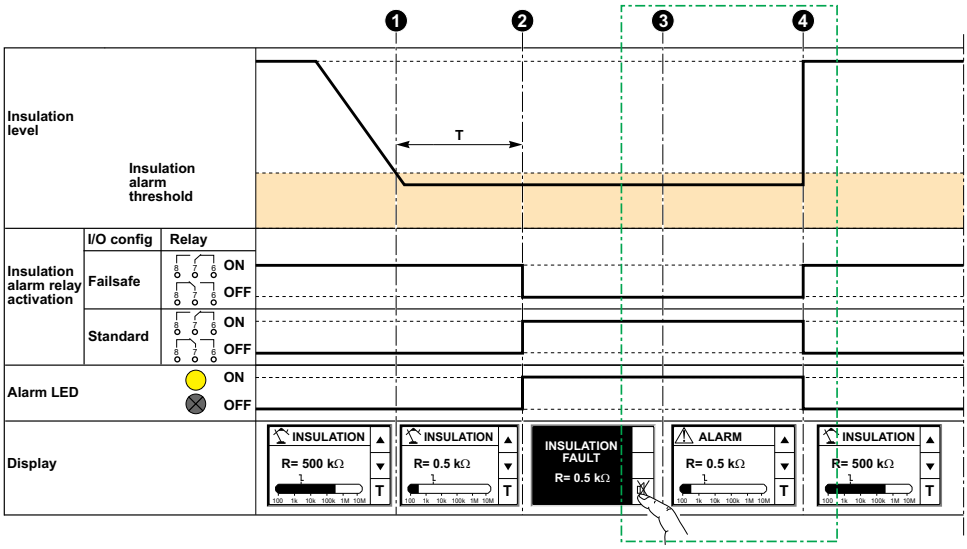

1	An insulation fault is detected on the system..
2	Once T has elapsed (alarm time delay), the device switches to the insulation alarm status. The insulation alarm relay changes over and the alarm LED turns on.
3	Press the button to acknowledge the insulation alarm. The insulation alarm relay does not reverts to its initial status.
4	The insulation fault is corrected. The alarm LED turns off. The device reverts to normal status.

Additional setup parameters for IM20

You need to configure the IM20 in order to display Z_C impedance and for operation in a higher-voltage power system.

Z_C impedance display

In order to calculate the Z_C value, the frequency of the power system must be configured. The accepted values are **DC** (for a DC power system), **50 Hz**, **60 Hz** and **400 Hz**. The default value is **50 Hz**.

High-voltage operation

When used in a power system exceeding 480 Vac or 345 Vdc with a high voltage adapter (IM20-1700), parameter **HV Plate.** must be set in **HV1700**. The default value is **None** (operation without an adapter and in a power system below 480 Vac or 345 Vdc).

Injection exclusion

Applicable for IM20.

Injection exclusion is used to ensure that no more than one IM20 is injecting into the same system.

The IM20 injects a low frequency into the system. In a system with several incoming feeders, depending on the circuit breaker position, there must be no more than one IMD injecting into the system.

This injection exclusion is managed by the inhibition input of the IM20, which is connected to the auxiliary contacts of the circuit breakers.

The injection inhibition input can be configured to use an NO contact (injection activated when the contact is open and injection deactivated when the contact is closed) or a NC contact (injection activated when the contact is closed and injection deactivated when the contact is open). The default value is NO.

Example: injection exclusion with two incoming feeders

You can use injection exclusion to monitor two incoming feeders.

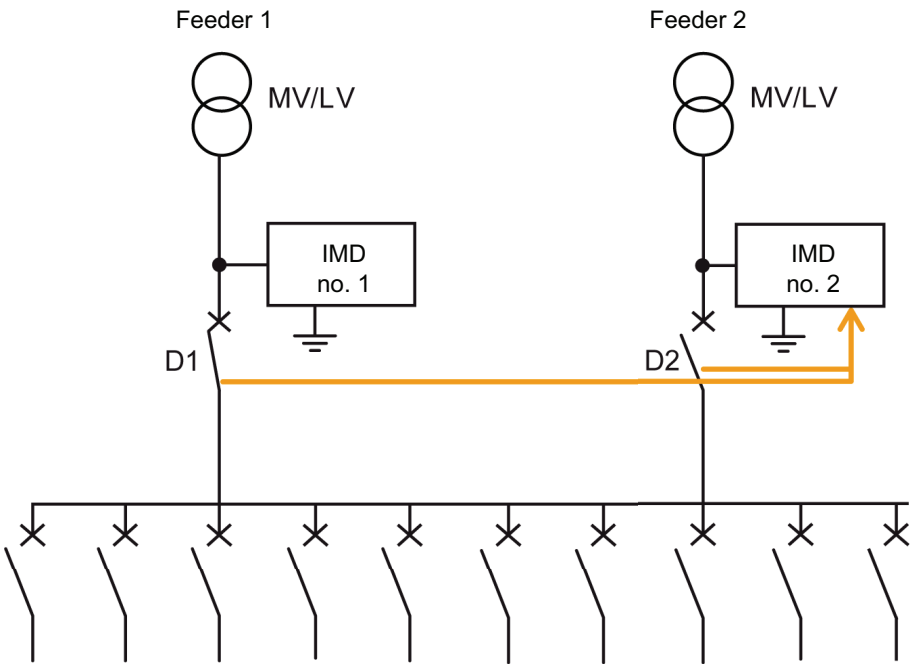

If	Then
• D1 is closed and • D2 is open	Both devices are active: • Device No. 1 monitors the insulation of the system, • Device No. 2 only monitors the insulation of transformer 2 connection as far as D2.
• D1 is open and • D2 is closed	Both devices are active: • Device No. 1 monitors the insulation of the transformer 1 connection as far as D1. • Device No. 2 monitors the insulation of the system.
• D1 is closed and • D2 is closed	• Device No. 1 monitors the insulation of the system. • Device No. 2 must be inhibited.

Example: injection exclusion with two incoming feeders and one coupling

You can use exclusion injection and a coupling to monitor two incoming feeders.

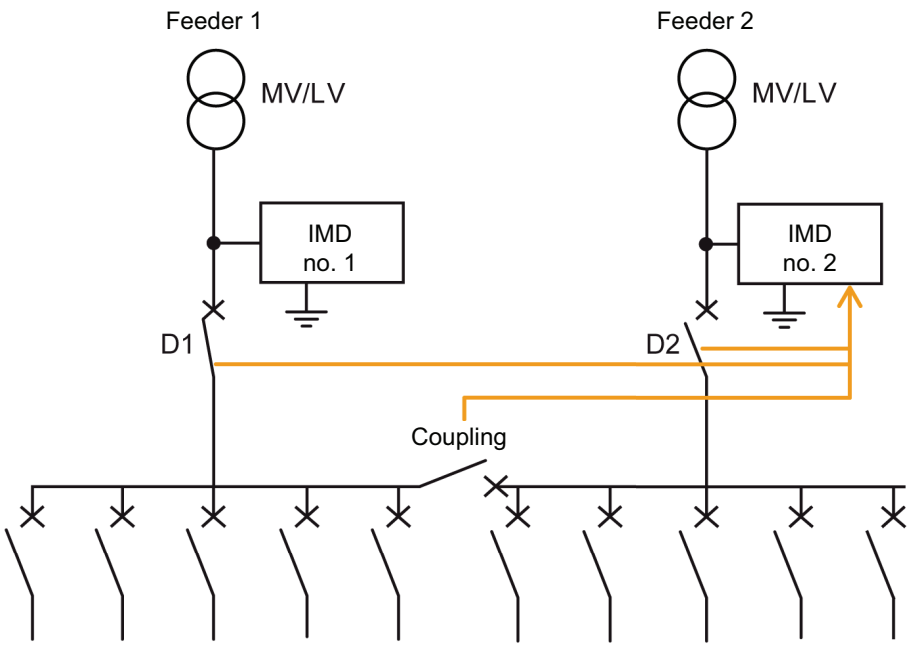

If	Then
The coupling is closed	The same applies as in the example for injection exclusion with two incoming feeders. See Example: injection exclusion with two incoming feeders, page 35 for example of injection exclusion with two incoming feeders.
The coupling is open: • D1 is closed AND • D2 is closed	Both devices are active: • Device no.1 monitors the insulation of system 1, • Device no.2 monitors the insulation of system 2.

Example: injection exclusion with multiple interconnected incoming feeders

By using a PLC, the wiring can be simplified and complex configurations can be considered.

The PLC can have the following characteristics:

- Number of digital inputs: is the number of circuit breakers for incoming feeder and for coupling. These inputs can be self-powered by the PLC or powered by an external power supply.
- Number of digital outputs: is the number of devices minus 1. These digital outputs can be electromechanical or solid-state outputs.
- Processing cycle is equal to 0.1 s or less.

Using a basic PLC to manage device exclusion allows to:

- Monitor continuously each part of ungrounded power system.
- Have a short response time to detect insulation faults.
- Be compatible with complex power systems with high number of incoming feeders and couplings.

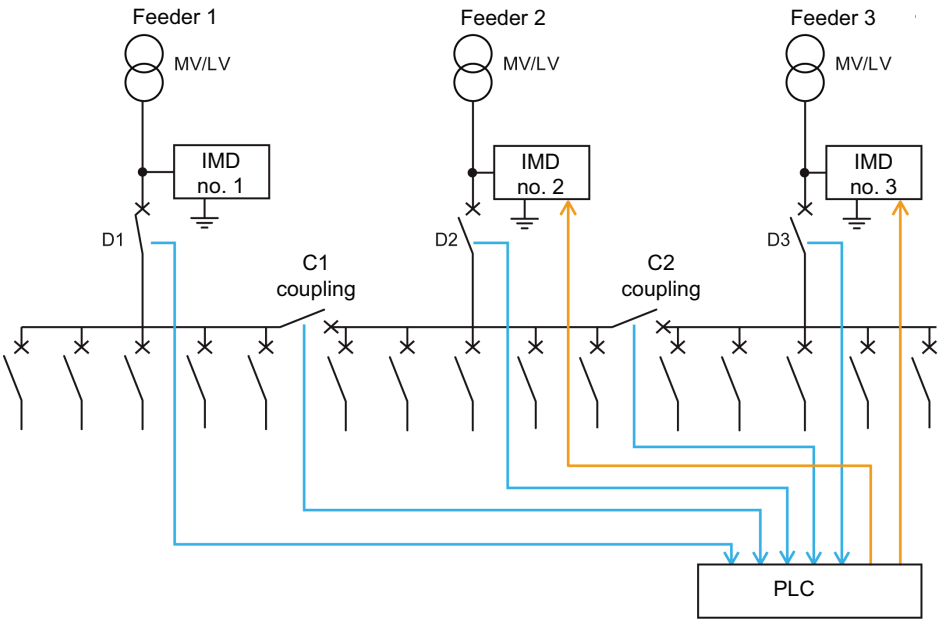

Truth table:

Possible configurations **0 = open, 1 = closed**					**Injection Inhibition** **0 = injection, 1 = injection inhibited**		
D1	**D2**	**D3**	**C1**	**C2**	**IMD no.1**	**IMD no.2**	**IMD no.3**
0	0	0	0	0	0	0	0
0	0	0	0	1	0	0	0
...							
0	1	1	1	1	0	0	1
...							
1	1	1	1	1	0	1	1

Injection inhibition screen

When the injection inhibition function is activated (that is, **Inhibit. Input** is set to **N. O.**), the following status screen displays and replaces any system status screen that may be displaying already (insulation measurement, insulation alarm or preventive insulation alarm).

You can perform the following actions on this screen:

- Press the **Menu** button to go to the main menu.
- Press the arrow buttons to view the settings screen.
- Press the **T** button to run the auto-test.

Reset

You can reset logs and trends. Further, you can perform factory reset.

You can access the device reset parameters by selecting **Menu > Settings > Reset**.

The reset parameters are **Reset Logs**, and **Factory Reset**.

On performing reset of logs, the existing logs information is erased but the settings parameter value remains unchanged. On performing factory reset, the settings parameter values are reset to default.

Self-test

Auto test overview

The device performs a series of auto-tests on start-up, and then at regular intervals during operation, to help detect any potential faults in its internal and external circuits.

The device's auto test function tests:

- The product: indicator lights, internal electronics.
- The measuring chain, the insulation alarm relay and the preventive insulation alarm relay.

The auto-test is triggered:

- Manually at any time by pressing the **T** contextual menu button on one of the system insulation monitoring screens.
- Automatically:

  Whenever the device starts up (power-up or reset)

  Every 5 hours (except when the device has detected an insulation fault, regardless of whether the alarm is active, has been acknowledged, or is transient).

Auto test sequence

During auto test, the device's indicator lights illuminate and information is shown on the display.

The following LEDs turn ON in sequence and turn OFF after the predefined time:

- **Alarm** white
- **ON** red
- **Alarm** yellow
- **ON** green

The relay toggles.

- If the auto test is successful, the following screen appears for 3 seconds and a status screen is displayed:

- If the auto test fails, the **Alarm** LED turns ON and a message is displayed to indicate that the product is malfunctioning. Disconnect the auxiliary power supply of device and reconnect. If the fault persists, contact technical support.

Human Machine Interface (HMI)

Vigilohm IM10 menu

Using the device display, you can navigate through the different menus to perform basic setup on your device.

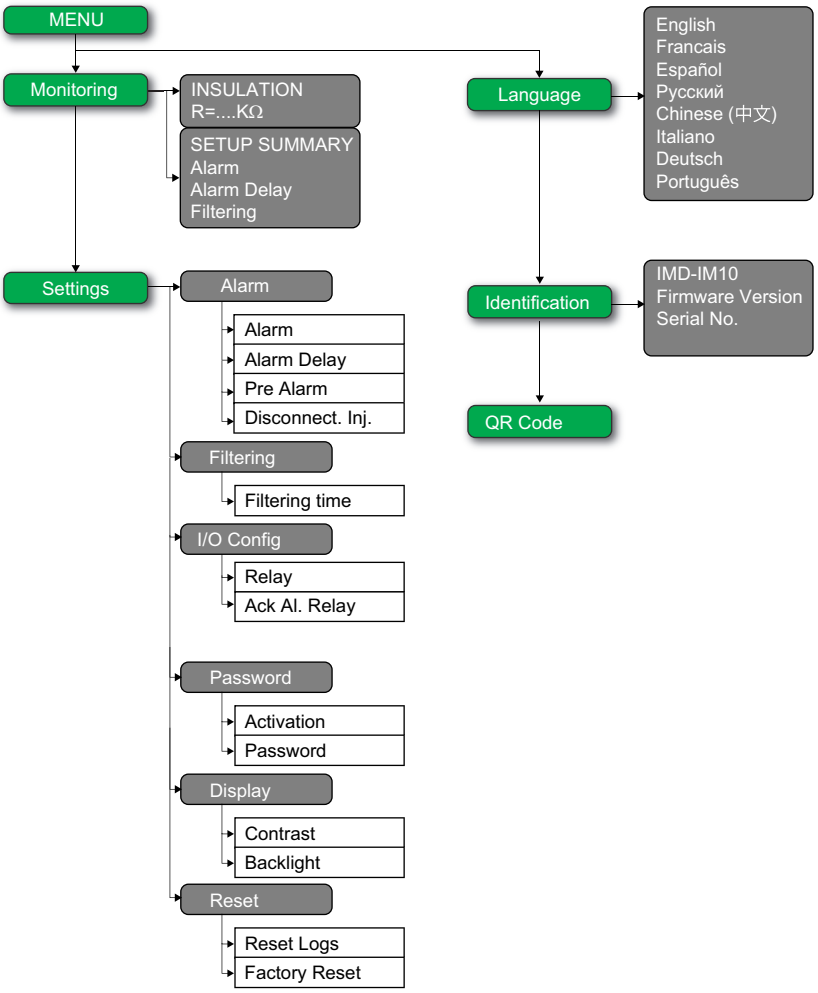

Vigilohm IM20 menu

Using the device display, you can navigate through the different menus to perform basic setup on your device.

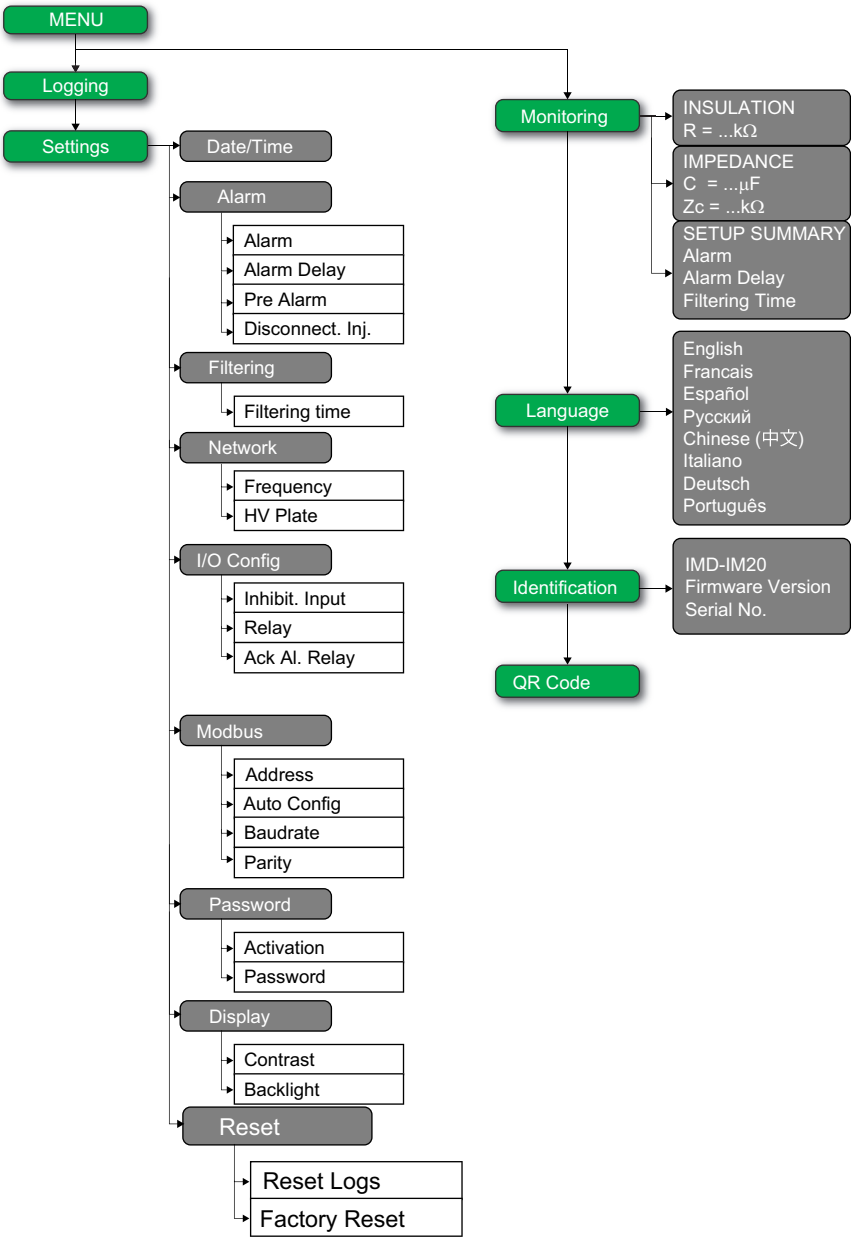

Display interface

Use the device display to perform various tasks such as configuring the device, displaying status screens, acknowledging alarms, or viewing events.

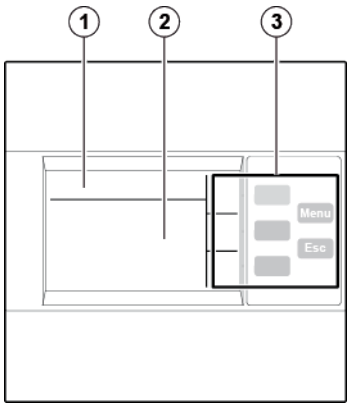

1	Screen identification area containing a menu icon, and the name of the menu or the parameter
2	Information area displaying information specific to the screen (measurement, insulation alarm, settings)
3	Navigation buttons

Navigation buttons and icons

Use the display buttons to navigate through menus and perform actions.

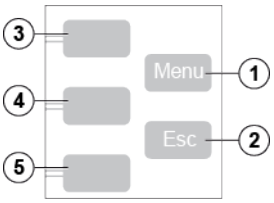

Legend	Button	Icon	Description
1	**Menu**	–	Display the level 1 menu (**Menu**).
2	**Esc**	–	Go back to the previous level.
3	Contextual menu button 3	▲	Scroll up the display or move to the previous item in a list.
			Access the date and time setting. If the clock icon flashes, it means that the Date/Time parameter needs to be set.
		+	Increase a numerical value.
4	Contextual menu button 2	▼	Scroll down the display or move to the next item in a list.
		←	Move one digit to the left within a numerical value. If the digit on the far left is already selected, pressing the button loops you back to the digit on the right.
5	Contextual menu button 1	OK	Validate the selected item. Acknowledge the transient alarm.
		T	Run the auto-test manually.
		↵	Go to a menu or submenu, or edit a parameter.
			Acknowledge the insulation alarm.

Information icons

Icons in the information area of the LCD display provide information such as what menu is selected and the insulation alarm status.

Icon	Description
	Main menu
	• System resistance (in the absence of an insulation fault) • Measurement parameters menu
	Fault log menu (IM20)
	Setting parameters menu and submenu
	Display language selection menu

Icon	Description
	Product identification
	• Indication of an insulation alarm • Indication of a preventive insulation alarm • Indication of a transient alarm
	Scanning the device QR code takes you to the product website.

Status screens

Introduction

The default screen shows the insulation resistance value of the system. It is automatically replaced by a screen that notifies an insulation alarm. The screen backlight flashes to indicate an insulation alarm.

Insulation resistance measurement (R)

The device displays the insulation resistance measurement for the system by default.

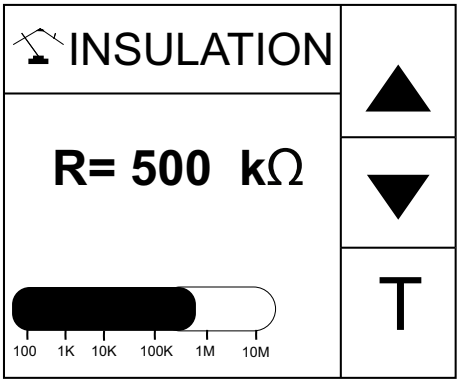

Insulation alarm detected: insulation fault

The device displays the insulation fault screen when the insulation value falls below the insulation alarm threshold.

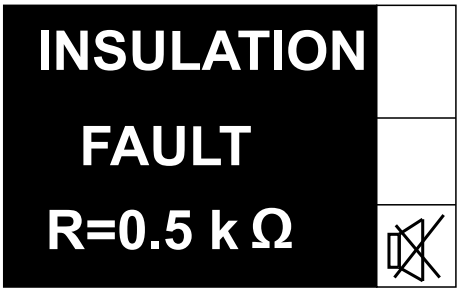

The screen flashes whenever an insulation alarm is detected.

There are two possible scenarios:

- Acknowledge the insulation alarm by pressing the button.

- If you do not acknowledge the insulation alarm and the system insulation returns to a value above the insulation alarm threshold, the screen displays transient fault.

Insulation alarm acknowledged

This screen is displayed when you have acknowledged the insulation alarm.

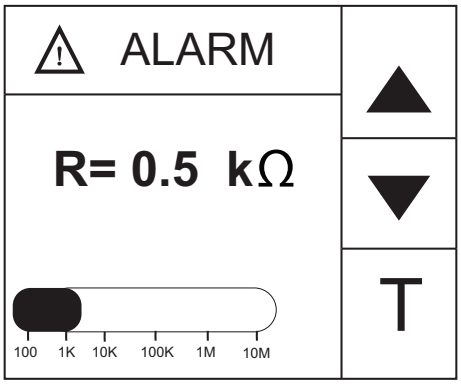

Preventive alarm activated

This screen is displayed when the preventive alarm has been activated.

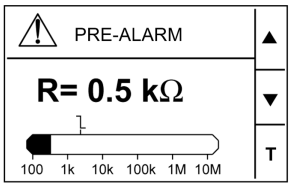

Transient fault

This screen is displayed when a transient fault has occurred.

Acknowledge the transient fault by pressing the **OK** button.

This screen is displayed when a transient fault has occurred.

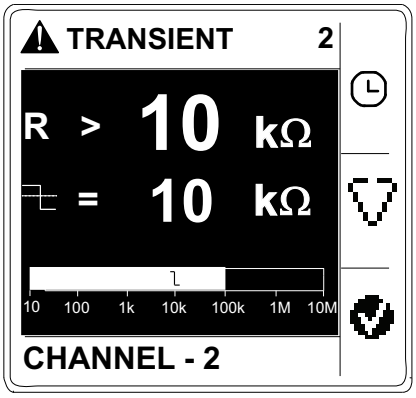

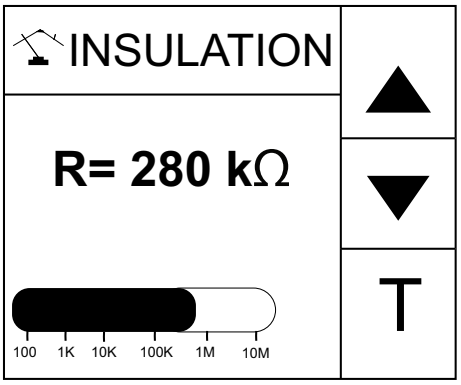

Acknowledge the transient fault by pressing the button.

Parameter modification using the display

To modify the values, you must be thoroughly familiar with the interface menu structure and general navigation principles.

For more information about how the menus are structured, see Vigilohm IM10 menu, page 39 and Vigilohm IM20 menu, page 39.

To modify the value of a parameter, follow either of these two methods:

- Select an item (value plus unit) in a list.
- Modify a numerical value, digit by digit.

For the following parameters, the numerical value can be modified:

- Date
- Time
- Password
- Modbus address (IM20)

Selecting a value in a list

To select a value in a list, use the up and down menu buttons to scroll through the parameter values until you reach the desired value, then press **OK** to confirm the new parameter value.

Modifying a numerical value

The numerical value of a parameter is made up of digits and the one on the far right is selected by default. To modify a numerical value, use the menu buttons as follows:

- ✚ to modify the selected digit.
- ⬅ to select the digit to the left of the one that is currently selected, or to loop back to the digit on the right.
- **OK** to confirm the new parameter value.

Saving a parameter

After you have confirmed the modified parameter, one of following two actions occur:

- If the parameter has been saved correctly, the screen displays **Saved** and then returns to the previous display.

- If the parameter has not been saved correctly, the screen displays **Out of Range** and the editing screen remains active. A value is deemed to be out of range when it is classed as forbidden or when there are several interdependent parameters.

Canceling an entry

To cancel the current parameter entry, press the **Esc** button. The previous screen is displayed.

Date/Time

Applicable for IM20

The date/time must be set:

- On first power up.
- When switching between summer and winter time and vice versa.

The date is displayed in the format: dd/mm/yyyy. The time is displayed using the 24-hour clock in the format: hh/mm.

When the device is powered up, the clock icon flashes on the system monitoring screens to indicate that the clock needs to be set. To set the date and time, see Parameter modification using the display, page 44.

NOTE: The date and time must be synchronized with the network time at the beginning of each month to ensure accurate system logging and reliable event time-stamping.

Log

Applicable for IM20

The device records the details of the 60 most recent insulation fault events. The fault events are triggered by one of following statuses:

- insulation fault
- preventive insulation fault

Event 1 is the event that was recorded most recently and event 60 is the oldest recorded event.

The oldest event is deleted when a new event occurs (the table is not reset).

By referring to this information, the performance of the distribution system can be improved and maintenance work is facilitated.

Insulation fault log display screen

You can the view the details of an insulation fault event by navigating to **Menu > Logging**.

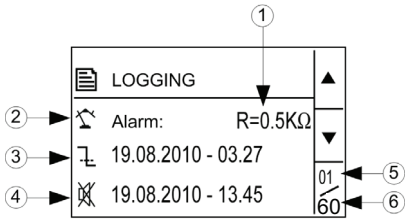

1	Insulation fault value recorded
2	Type of fault recorded: • insulation fault • preventive insulation fault **NOTE:** These faults are recorded as primary record.
3	Date and time when the fault appeared **NOTE:** This information is stored as primary record.
4	Date and time when the fault disappeared due to any one of the following event: • Insulation fault acknowledgement • Disappearance of the preventive insulation fault or transient insulation fault **NOTE:** This information is stored as secondary record.
5	Number of the event displayed
6	Total number of events recorded

Use the up and down arrows to scroll through the events.

Communication

Communication is applicable for IM20

Communication parameters

Before initiating any communication with the device, you must configure the Modbus communication port. You can configure communication parameters by selecting (**Menu > Settings > Modbus**).

The communication parameters and its allowed and default values are as follows:

Parameter	Default value	Allowed values
Address	**1**	**1...247**
Auto Config	**OFF**	• **ON** • **OFF**
Baud rate	**19200**	• **4800** • **9600** • **19200** • **38400**
Parity	**Even**	• **None** • **Even** • **Odd**

To modify the parameter value, see Parameter modification using the display, page 44.

In point-to-point mode, when the device is directly connected to a computer, the reserved address 248 can be used to communicate with the device irrespective of the device internal address.

Modbus functions

The device supports Modbus function codes.

Function Code		Function Name
Decimal	**Hexadecimal**	
3	0x03	Read Holding Registers (3)
4	0x04	Read Input Registers (3)
6	0x06	Write Single Register
8	0x08	Diagnostic Modbus
16	0x10	Write Multiple Registers
43 / 14	0x2B / 0E	Read Device Identification
43 / 15	0x2B / 0F	Get Date/Time
43 / 16	0x2B / 10	Set Date/Time

(3) The Read Holding and Read Input registers are identical.

Read Device Identification request

Number	Type	Value
0	VendorName	Schneider Electric
1	ProductCode	IMD-IM20
2	MajorMinorRevision	XXX.YYY.ZZZ
3	VendorURL	www.se.com
4	ProductName	Insulation Monitoring Device
5	ModelName	IM20

The device answers any type of requests (basic, regular, extended).

Modbus register table format

Register tables have the following columns.

Column heading	Description
Address	The address of the Modbus, in decimal (dec) and hexadecimal (hex) formats.
Register	The register of the Modbus, in decimal (dec) and hexadecimal (hex) formats.
R/W	Read only (R) or read/write (R/W) register.
Unit	The unit in which the information is expressed.
Type	The coding data type. **NOTE:** For the Float32 data type, the byte order follows the Big Endian format.
Range	Permitted values for this variable, usually a subset of what the format allows.
Description	Provides information about the register and the values applied.

Modbus registers table

The following table lists the Modbus registers that apply to your device.

System status registers

Address		Register		R/W	Unit	Type	Range	Description
dec	hex	dec	hex					
100	64	101	65	R	–	Uint16	–	Product identifier • 17000 - IM10 • 17002 - IM20
114..115	72...73	115...116	73...74	R	–	Uint32	–	Product state • Bit1 - Reserved • Bit2 - Auto test • Bit3 - Reserved • Bit4 - Reserved • Bit5 - Monitoring • Bit6 - Reserved • Bit7 - Product error • Bit8 - System error • Bit9 - Injection disabled • Bit10 - Reserved

System status registers (Continued)

Address		Register		R/W	Unit	Type	Range	Description
dec	hex	dec	hex					
116	74	11722	75	R	–	Uint16	–	Product error codes • 0XFFFF - No error • 0x0000 - Unknown error • 0x0DEF - Undefined model • 0xAF00 - Auto-test failure • 0xBE00 - Metering • 0xC0F1 - Configuration error • 0x5EFA - Sensor call problem • 0xD1A1 - Glued IO • 0xD1A2 - RAM • 0xD1A3 - EEPROM • 0xD1A4 - Relay • 0xD1A5 - Status input • 0xD1A6 - Flash • 0xD1A7 - SIL • 0xE000 - NMI interrupt • 0xE001 - Hard fault exception • 0xE002 - Memory fault exception • 0xE003 - Bus fault exception • 0xE004 - Usage fault exception • 0xE005 - Unexpected interrupt • 0xFAF5 - Unexpected interrupt
120...1-39	78...8B	121...140	79...8C	R	–	UTF8	–	Product family
140...1-59	8C...9F	141...160	8D...A0	R/W	–	UTF8	–	Product name (User application name)
160...1-79	A0...B3	161...180	A1...B4	R	–	UTF8	–	Product code • IMD-IM10 • IMD-IM20
180...1-99	B4...C7	181...200	B5...C8	R	–	UF8	–	Manufacturer: Schneider Electric
208...2-19	D0...DB	209...220	D1...DC	R	–	UF8	–	ASCII serial number
220	DC	221	DD	R	–	Uint16	–	Manufacturing unit identifier
300...3-06	12C...-132	301...307	12D...133	R	–	Uint16	–	Date and time in 7 register format The following parameters correspond to each register: • 300 - Year • 301 - Month • 302 - Day • 303 - Hour • 304 - Minute • 305 - Second • 306 - Millisecond
307...3-10	133...1-36	308...311	134...137	R/W	–	Uint16	–	Date and time in TI081 format. See Date and time (TI081 format), page 55.

System status registers (Continued)

Address		Register		R/W	Unit	Type	Range	Description
dec	hex	dec	hex					
320...3-24	140...1-49	321...325	141...145	R	–	Uint16	–	Present firmware version • X represents the primary revision number, which is encoded in register 321 • Y represents the secondary revision number, which is encoded in register 322 • Z represents the quality revision number, which is encoded in register 323
550...5-55	226...2-2B	551...556	227...22C	R	–	UTF8	–	Existing OS version

Modbus

Address		Register		R/W	Unit	Type	Range	Description
dec	hex	dec	hex					
750	2EE	751	2EF	R/W	–	Uint16	1...247	Device address Default value: 1
751	2EF	752	2F0	R/W	–	Uint16	• 0 = 4800 • 1 = 9600 • 2 = 19200 • 3 = 38400	Baud rate Default value: 2 (19200)
752	2F0	753	2F1	R/W	–	Uint16	• 0 = Even • 1 = Odd • 2 = None	Parity Default value: 0 (Even)

Insulation monitoring registers

Address		Register		R/W	Unit	Type	Range	Description
dec	hex	dec	hex					
1020...-1021	3F-C...3FD	1021...10-22	3FD...3FE	R	Ohm	Float32	–	Resistance The value NaN (Not a Number) 0xFFC00000 is returned during the auto-test.
1022...-1023	3F-E...3FF	1023...10-24	3FF..400	R	nF	Float32	–	Capacitance The value NaN (Not a Number) 0xFFC00000 is returned during the auto-test.
1031	407	1032	408	R	V	Float32	• 0 = Injection active • 1 = Injection inactive	**NOTE:** Applicable for IM20. Injection status

Insulation alarm

Address		Register		R/W	Unit	Type	Range	Description
dec	hex	dec	hex					
1100	44C	1101	44D	R	–	Uint16	• 0 = No alarm • 1 = Insulation alarm active • 2 = Preventive insulation alarm active • 4 = Transient insulation alarm active • 8 = Insulation alarm acknowledged	Insulation alarm
1110...1-111	456...45-7	1111...1-112	457...458	R	–	Uint32	–	Product status • 0 - No alarm • Bit 1 - Active alarm • Bit 2 - Active pre-alarm • Bit 3 - Transient alarm • Bit 4 - Alarm acknowledged • Bit 5 - Reserved • Bit 6 - Reserved • Bit 7 - Reserved • Bit 8 - Reserved • Bit 9 - First measurement • Bit 10 - Reserved • Bit 11 - Reserved • Bit 12 - Reserved • Bit 13 - Auto test • Bit 14 - Reserved • Bit 15 - Injection disable • Bit 16 - Reserved • Bit 17 - Disconnected injection • Bit 18 - Over limit capacitance • Bit 19 - Over voltage • Bit 20 - Reserved • Bit 21 - Reserved • Bit 22 - Reserved • Bit 23 - Reserved • Bit 24 - Reserved • Bit 25 - Product error • Bit 26 - Reserved • Bit 27 - Reserved • Bit 28 - Reserved • Bit 29 - Reserved • Bit 30 - Reserved • Bit 31 - Reserved • Bit 32 - Power Down

Diagnostics

Address		Register		R/W	Unit	Type	Range	Description
dec	hex	dec	hex					
2000	7D0	2001	7D1	W	–	Uint16	0xA456 = run auto-test	Run the auto-test of the product without testing the relay (same as the auto-test cycle).
2005...-2006	7D5...7-D6	2006...2-007	7D6...7D7	R	–	Uint32	–	Total number of power cycles since first power-up of the product

Diagnostics

Address		Register		R/W	Unit	Type	Range	Description
dec	hex	dec	hex					
2050	802	2051	803	W	–	Uint16	–	Write 0x1919 to reset factory settings (default factory settings)
2051	803	2052	804	W	–	Uint16	–	Write 0xF0A1 to reset all logs

Settings

Address		Register		R/W	Unit	Type	Range	Description
dec	hex	dec	hex					
3000	BB8	3001	BB9	R/W	—	Uint16	• 0 = Normally open • 1 = Normally closed	**NOTE:** Applicable for IM20. Injection inhibition Default value: 0 (Normally open)
3001	BB9	3002	BBA	R/W	–	Uint16	• 1= Standard • 2 = Failsafe	Insulation alarm relay logic command Default value: 2 (Failsafe)
3002...-3003	BBA...BBB	3003...3-004	BBB...BBC	R/W	Ohm	Uint32	0.5...500 kΩ	Insulation alarm threshold Default value: 50 kΩ
3004...-3005	BBC...BBD	3005...3-006	BBD...BBE	R/W	Ohm	Uint32	• 1 kΩ...1 MΩ • 0xFFFFFFFF = OFF	Preventive alarm threshold OFF is used to deactivate the preventive alarm. Default value: 0xFFFFFFFF
3007	BBF	3008	BC0	R/W	s	Uint16	0...7200 s	Insulation alarm time delay (in seconds) Default value: 0 s
3008	BC0	3009	BC1	R/W	–	Uint16	• 0 = 4s • 1 = 40s • 2 = 160s	Network filtering Default value: 1(40s)
3009	BC1	3010	BC2	R/W	Hz	Uint16	• 0 Hz • 50 Hz • 60 Hz • 400 Hz	**NOTE:** Applicable for IM20. Network frequency Default value: 50 Hz
3014	BC6	3015	BC7	R/W	–	Uint16	0000...9999	Password Default value: 0000
3015	BC7	3016	BC8	R/W	–	Uint16	• 0 = OFF • 1 = ON	Password protection Default value: 0 (password protection deactivated)
3016	BC8	3017	BC9	R/W	–	Uint16	• 0 = English • 1 = French • 2 = Spanish • 3 = Russian • 4 = Chinese • 5 = Italian • 6 = German • 7 = Portuguese	Interface language Default value: 0 (English)
3017	BC9	3018	BCA	R/W	%	Uint16	10...100%	Screen contrast Default value: 50%
3018	BCA	3019	BCB	R/W	%	Uint16	10...100%	Screen brightness. Default value: 100%

Settings (Continued)

Address		Register		R/W	Unit	Type	Range	Description
dec	hex	dec	hex					
3019	BCB	3020	BCC	R/W	–	Uint16	• 0 = None • 1 = HV1700	**NOTE:** Applicable for IM20. High voltage adapter Default value: 0 (no adapter)
3022	BCE	3023	BCF	R/W	–	Uint16	• 0 = Disabled • 1 = Enabled (relay triggers for 3 seconds when fault disappears in alarm acknowledge mode)	Corrected insulation fault signal Disable corrected insulation fault signal if acknowledge alarm relay is disabled. Default value: 0 (Disabled)
3023	BCF	3024	BD0	R/W	–	Uint16	• 0 = Disabled • 1 = Enabled	Acknowledge alarm relay Default value: 1 (Enabled)

NOTE:

Applicable for IM20.

Logging

Address		Register		R/W	Unit	Type	Range	Description
dec	hex	dec	hex					
19996..-.19997	4E1-C...4E1-D	19997...-19998	4E1D...4-E1E	R	–	Uint32	–	Roll over counter
19998..-.19999	4E1-E...4E1F	19999...-20000	4E1F...4-E20	R	–	Uint32	1...240	Number of event records
20001	4E21	20002	4E22	R	–	Uint16	–	Most recent record number
20002..-.20013	4E22...-4E2D	20003...-20014	4E23...4-E2E	R	–	Record	–	Record 1
20014..-.20025	4E2-E...4E39	20015...-20026	4E2F...4-E3A	R	–	Record	–	Record 2
...								
20338..-.20349	4F72...-4F7D	20339...-20350	4F73...4-F7E	R	–	Record	–	Record 30
20710..-.20721	50E6...-50F1	20711...-20722	50E7...50-F2	R	–	Record	–	Record 60

Alarm event records

Each event is stored using two records:

- A "primary" record, which is created when the insulation alarm or prevention insulation alarm occurs. This contains the insulation value.
- A "secondary" record, which is created when the insulation alarm or prevention insulation alarm disappears. This contains the type of event (acknowledged insulation alarm, transient insulation alarm, prevention insulation alarm).

Description of an Event Record in the Log

Register	Unit	Type	Range	Description
Word 1	–	Uint16	1...65535	Event record number
Word 2 Word 3 Word 4 Word 5	–	Uint64	–	Time tagging of event (using the same code as for the product date/time)
Word 6 Word 7	–	Uint32	• 0….1 • 0x40, 0x20 • 1020...1021, 1110	Record identifier: • Word 6, most significant byte: information for primary/secondary record. This field takes the value 1 for the primary record and value 0 for the secondary record. • Word 6, least significant byte: type of data stored in the Value field. • Word 7: address of the Modbus register that is the source of the data in the Value field.
Word 8 Word 9 Word 10 Word 11	–	Uint64	–	Depending on the type of record (primary or secondary): • Primary record (when the event occurs): Insulation resistance value (in Ohm) when the event occurred (coded in Float32 in the last 2 registers). • Secondary record (when the event disappears or is acknowledged) — Type of insulation (encoded in Uint16 on the last register)
Word 12	–	Uint16	1...65534	Primary/secondary record identifier for the event: • In the case of a primary record for an event, this identifier is an odd integer; numbering starts at 1 and the number is incremented by 2 for each new event. • In the case of a secondary record for an event, this identifier is equal to the primary record identifier plus 1.

Example of an event

The next 2 records relate to an example insulation alarm that occurred on October 1, 2010 at 12:00 pm and was acknowledged at 12:29 pm.

Record number: 1

Address		Register		Unit	Type	Value	Description
dec	hex	dec	hex				
20002	4E22	20003	4E23	–	Uint16	1	Record number
20003	4E23	20004	4E24	–	Uint64	• 10 • 0 • 10 • 1 • 12 • 0 • 0	Date when insulation alarm occurred (October 1, 2010, 12:00 pm)
20007	4E27	20008	4E28	–	Uint32	• 1 • 0x40 • 1020	Record identifier: • Primary record plus secondary record • Float32 value (insulation resistance) • Value of register 1020 (register for insulation resistance monitoring)
20009	4E29	20010	4E2A	Ohm	Uint64	10000	Insulation resistance value at the time of the insulation alarm
20013	4E2D	20014	4E2E	–	Uint16	1	Secondary record identifier for the event

Record number: 2

Address		Register		Unit	Type	Value	Description
dec	hex	dec	hex				
20014	4E2E	20015	4E2F	–	Uint16	2	Record number
20015	4E2F	20016	4E30	–	Uint64	• 10 • 0 • 10 • 1 • 12 • 29 • 0	Date when insulation alarm acknowledged (October 1, 2010, 12:29 pm)
20019	4E33	20020	4E34	–	Uint32	• 1 • 0x20 • 1110	Record identifier: • Secondary record • Uint32 value (alarm acknowledged) • 1110 register value (product status register).
20021	4E35	20022	4E36	–	Uint64	8	Value of insulation alarm register at the time of insulation alarm acknowledgement
20025	4E39	20026	4E3A	–	Uint16	2	Secondary record identifier for the event

Date and time (TI081 format)

The following structure is used for date-time information exchange using Modbus protocol.

The date/time are encoded in 8 bytes as follows:

b15	b14	b13	b12	b11	b10	b09	b08	b07	b06	b05	b04	b03	b02	b01	b00	Word
0	0	0	0	0	0	0	0	R4	Y	Y	Y	Y	Y	Y	Y	Word 1
0	0	0	0	M	M	M	M	WD	WD	WD	D	D	D	D	D	Word 2
SU	0	0	H	H	H	H	H	iV	0	mn	mn	mn	mn	mn	mn	Word 3
ms	ms	ms	ms	ms	ms	ms	ms	ms	ms	ms	ms	ms	ms	ms	ms	Wrod 4

- R4: Reserved bit (reserved by IEC870-5-4), set to 0
- Y - Years
  - 1 byte
  - Value from 0...127 (1/1/2000 to 31/12/2127)
- M - Months
  - 1 byte
  - Value from 1...12
- D - Days
  - 1 byte
  - Value from 1...31
- H - Hours
  - 1 byte
  - Value from 0...23

- mn - Minutes
  - 1 byte
  - Value from 0...59
- ms - Milliseconds
  - 2 byte
  - Value from 0...59999

The following fields are in CP56Time2a standard and are considered as optional:

- WD - Week Day
  - If not used, set to 0 (1 = Sunday, 2 = Monday...)
  - Value from 1...7
- SU - Summertime
  - If not used, set to 0 (0 = standard time, 1 = summertime)
  - Value from 0...1
- iV - Validity of the information contained in the structure
  - If not used, set to 0 (0 = valid, 1 = not valid or not synchronized in system)
  - Value from 0...1

This information is encoded in binary form.

Configuring IM20 series device using PowerLogic™ ION Setup

Overview

ION Setup is a device configuration tool that can be downloaded for free at www.se.com.

See the ION Setup online help or in the ION Setup device configuration guide. To download a copy, go to www.se.com and search for ION Setup device configuration guide.

Configure the device using the PowerLogic™ ION Setup.

⚠ WARNING

UNINTENDED OPERATION

- Do not use the ION Setup software and associated devices for critical control or protection applications where human or equipment safety relies on the operation of the control circuit.
- Do not rely solely on the ION Setup data to determine if your power system is functioning correctly or meeting all applicable standards and compliances.
- Do not use the ION Setup control for time-critical functions because delays can occur between the time a control action is initiated and when that action is applied.
- Do not incorrectly configure the ION Setup and its associated devices.

Failure to follow these instructions can result in death, serious injury, or equipment damage.

NOTICE

LOSS OF DATA

Before changing device configuration values, ensure that all recorded data has been saved in a secure location.

Failure to follow these instructions can result in equipment damage.

NOTICE

LOSS OF CONTROL

Before changing scale factors, disable all affected alarms and ensure that any recorded data has been saved. Changing scale factors may affect alarm status and any recorded data.

Failure to follow these instructions can result in equipment damage.

Setting up a network site

You can communicate with the IM20 series device using the RS-485 gateway. A gateway device, such as an EGX or ION7650, must be configured first to provide communications access. The gateway uses the RS-485 protocol to communicate on its serial port.

Prerequisites:

- Devices in the system are wired correctly.
- Communications for the devices are properly configured.

To set up a network site:

1. Start the ION Setup in Network mode.
2. Select the **System** icon and select **Insert Item**.
3. Select the **Site** and then select **OK**.

   The **New Site** dialog appears.
4. Enter a descriptive name for the site in the **Name** dialog. Then, choose **Serial**.
5. Select the **comm port** from the drop down list.
6. Select the **Port Settings** from the drop down list.
7. Select the **Baud** value from the drop down list and then select **OK**.

Adding IM20 series device to a site

You can add IM20 series device to a site in the network mode.

To add IM20 series device to a site:

1. Start the ION Setup in Network mode.
2. Select the site icon and select **Insert Item**.
3. Select the **Device** and then select **OK**.

   The **New Device** dialog appears.
4. Enter a descriptive name for your device in the dialog box **Name** (for example, IM20).
5. Select the **Vigilohm IMD Insulation Monitoring Device** from the drop down list for the **Type**.
6. Enter a value between **1** - **247** in the **Unit ID** field.
7. Select the **Group** you want to assign the device from the drop down list, and then select **OK** to go back to the Network Viewer.

   NOTE:

   - You may need to change the template option if the device setup screens do not correctly reflect your device **Type**.
   - The **Display** tab dialog box will highlight the current **Template Options** when it has established communication with the device. Select the appropriate **Template Options** (**Default** / **IM20**) for the device and then select **OK** to go back to the Network Viewer.

IM20 series configuration screens

Configuring the clock parameters (Date/Time)

Configure the date and time of the internal clock of a device and synchronize the date and time of the devices in your system with your workstation using the **Clock** screen.

NOTE: When the power to your device is interrupted, you might see a dialog that prompts you to reset the date and time.

To configure the clock parameters (Date/Time):

1. Select **Clock** to open the dialog showing the list of parameters.

2. Select a parameter and select **Edit** to open its specific setup dialog.

Parameters	Options	Description
Device	**Device Date** **Device Time**	Select the device date and time. **NOTE:** The **Device** changes to **Update to** and shows the date and time that will be sent to the device.
Sync to	**UTC (Universal Coordinated Time)** • **Device time zone**: Not applicable	UTC is the same as Greenwich Mean Time (GMT). **NOTE:** Daylight Saving Time and time zones do not apply to UTC
	PC Standard Time (No DST) • **Device time zone** ◦ **Same as this PC** ◦ **Behind this PC** – **Time Offset** ◦ **Ahead of this PC** – **Time Offset**	PC Standard Time is the time on your computer without Daylight Saving Time applied. If the device you are programming is in a different time zone from your computer, select the appropriate time zone correction. Select the offset time in hours (0 to 23) and minutes (0, 15, 30, 45). For time zone ahead of this PC, the time is displayed with + sign (example: +6h45min) and time zone behind this PC, the time is displayed with - sign (example: -6h45min).
	PC Local Time (DST if applicable) • **Device time zone** ◦ **Same as this PC** ◦ **Behind this PC** – **Time Offset** ◦ **Ahead of this PC** – **Time Offset**	PC Local Time is the time on your computer with Daylight Saving Time applied. If the device you are programming is in a different time zone from your computer, select the appropriate time zone correction. Select the offset time in hours (0 to 23) and minutes (0, 15, 30, 45). For time zone ahead of this PC, the time is displayed with + sign (example: +6h45min) and time zone behind this PC, the time is displayed with - sign (example: -6h45min).
	Synchronization Time	The synchronization time and date of the device.

3. Select **OK**, and then select **Send** to save your changes to the device.

   NOTE: When changes are not saved to the device, the status bar on the bottom left screen shows **Download Incomplete**.

Configuring the front panel display settings

Configure the language, display contrast, and display brightness standard selection using the **Front Panel Display** screen.

To configure the front panel display settings:

1. Select **Front Panel Display** to open the dialog showing the list of parameters.
2. Select a parameter and select **Edit** to open its specific setup dialog.

Parameters	Options	Description
Language	**English** **French** **Spanish** **Russian** **Chinese** **Italian** **German** **Portuguese**	Select the language you want the device to display.
Display Contrast	**10** to **100**	Enter a value from 10 (brightest) to 100 (dimmest).
Display Brightness	**10** to **100**	Enter a value from 10 (dimmest) to 100 (brightest).

3. Select **OK**, and then select **Send** to save your changes to the device.

   NOTE: When changes are not saved to the device, the status bar on the bottom left screen shows **Download Incomplete**.

Configuring the I/O configuration parameters

Configure the injection inhibition input and insulation alarm relay parameters using the **I/O Configuration** screen.

To configure the I/O configuration parameters:

1. Select the **I/O Configuration** folder to open the dialog showing the list of parameters.
2. Choose the parameters you need to modify and select **Edit**.

Parameters	Options	Description
Injection Inhibition Input	**Normally open** **Normally closed**	Injection exclusion is controlled by the inhibition input of the device, which is linked to the auxiliary contacts of the circuit breakers.
Insulation Alarm Relay	**Standard connection** **failsafe**	Configure the insulation alarm relay mode based on the insulation status.

3. Select **OK**, and then select **Send** to save your changes to the device.

   NOTE: When changes are not saved to the device, the status bar on the bottom left screen shows **Download Incomplete**.

Configuring the insulation alarm setup

Configure the alarm parameters using the **Insulation Alarm Setup** screen.

To configure the insulation alarm setup:

1. Select the **Insulation Alarm Setup** to open the dialog setup.
2. Select the **Insulation Alarm Threshold** alarm and select **Edit** to open **Insulation Alarm Threshold** dialog.
3. Select an alarm parameter from the list and edit the settings.

Parameters	Options	Description
Insulation Alarm Threshold	**0.1 KOhm** to **500 KOhm** (Default: 0.1 KOhm)	Set the insulation alarm threshold for all the alarm parameters.
Insulation Alarm Delay	**0 seconds** to **2 hours** (Default: 0 seconds)	Set the insulation alarm delay for all the alarm parameters.
Preventive Alarm Threshold	**Deactivated** to **1 MOhm** (Default: Deactivated)	Set the preventive alarm threshold for all the alarm parameters.

4. Select **OK**, and then select **Send** to save your changes to the device.

   NOTE: When changes are not saved to the device, the status bar on the bottom left screen shows **Download Incomplete**.

Generating the device configuration reports

Generate reports for the current device configuration using the **Reports** screen. You can use this screen to view, print, and save a report file that records the device's current configuration.

To generate the device configuration reports:

1. Select **Reports** to open the dialog.
2. Select the **Display** to retrieve the device configuration report.

   The ION Setup retrieves and uploads report details from your device to the screen. Depending on the data, this process may take a few moments or several minutes to complete. After completion, all report parameters and their respective values will be displayed.
3. Select **Save As** to save the configuration report as a **.TXT** file, or select **Print** to print the configuration report.

Configuring the device resets

During the **Self-Test**, the device activates its indicator lights and displays relevant information on the screen.

To configure the device resets:

1. Select **Resets** to open the dialog box.
2. Select **Perform Self-Test** and select **Reset**.
3. Select **Proceed** to reset all energies.

Configuring the transformer setup

Configure the transformer parameters using the **Transformer Setup** screen.

To configure the transformer setup:

1. Select the **Transformer Setup** to open the dialog setup.
2. Select the **CT Primary (A)** and select **Edit** to open **CT Primary (A)** dialog.
3. Select the transformer parameter from the list and edit the settings.

Parameters	Options	Description
CT Primary (A)	**40** to **9999** (Default: 50)	This value should match the CT installed on the primary side of the system to ensure accurate scaling of measured current.
CT Secondary	**1 Amp** **5 Amps** (Default: 5 Amps)	Specifies the rated secondary current of the CT. This must match the CT's actual secondary rating to avoid measurement errors.
Nominal Current	**12** to **9999** (Default: 36)	Sets the expected operating current of the system. Used as a reference for calculating load percentage and triggering alarms.
Threshold (%)	**1** to **100** (Default: 80)	Determines the load level (as a percentage of nominal current) at which warnings or alarms are activated. Helps in early detection of overload conditions.

4. Select **OK**, and then select **Send** to save your changes to the device.

   NOTE: When changes are not saved to the device, the status bar on the bottom left screen shows **Download Incomplete**.

Maintenance

Safety precautions

The following safety precautions must be thoroughly implemented before attempting to commission the system, repair electrical equipment or carry out maintenance.

Carefully read and follow the safety precautions described below.

⚠⚠ DANGER

HAZARD OF ELECTRIC SHOCK, EXPLOSION, OR ARC FLASH

- Apply appropriate Personal Protective Equipment (PPE) and follow safe electrical work practices. See NFPA 70E, CSA Z462 or other local standards.
- Turn off all power supplying this device and the equipment in which it is installed before working on or in the equipment.
- Always use a properly rated voltage sensing device to confirm that all power is off.

Failure to follow these instructions will result in death or serious injury.

NOTICE

EQUIPMENT DAMAGE

- Do not open this unit.
- Do not attempt to repair any components of this product or any of its accessory products.

Failure to follow these instructions can result in equipment damage.

Disconnected injection detection

The device displays a message if it does not detect an injection signal.

If the injection circuit of the device is interrupted, the display shows the following message and starts to flash:

By default, the disconnected injection detection parameter is activated (parameter **Disconnect. Inj** is set to **ON**).

When installing and commissioning the unit and the electrical panel, before you plug the equipment to the electrical power system, set parameter **Disconnect. Inj.** to **OFF** to prevent the message from being displayed.

Depending on the demands of the electrical network or the application, during the final commissioning, you may need to reactivate the disconnected injection detection parameter (by selecting **Settings > Alarm > Disconnect. Inj.** set to **ON**). Therefore, the device constantly monitors during operation and reports any injection connection or wiring problem.

ON light indicator

If the **ON** light indicator is red, there is an error in the power system or your device.

The error is one of the following cases:

- Interruption of the injection circuit
- Auto test not OK
- Product error
- System error
- Over limit capacitance (C > 60 µF (or > 150 µF with a high voltage adapter))

Troubleshooting

There are some checks you can perform to try to identify potential issues with the device's operation.

The following table describes potential problems, their possible causes, checks you can perform and possible solutions for each. After referring to this table, if you cannot resolve the problem, contact your local Schneider Electric sales representative for assistance.

Potential problem	Possible cause	Possible solution
The device displays nothing when switched on.	No power supply to the device.	Check that the auxiliary power supply is present.
	The auxiliary power supply is not compliant.	Check the auxiliary voltage: U = 110...480 Vac
The device notified an insulation fault, but your system shows no signs of abnormal behavior.	The insulation alarm threshold is not appropriate.	Check the value of the insulation alarm threshold. Modify the insulation alarm threshold as appropriate.
	The preventive alarm threshold for faults is not appropriate.	Check the value of the preventive insulation alarm threshold. Modify the preventive insulation alarm threshold as appropriate.
You deliberately created an insulation fault, but the device failed to detect it.	The resistance value used to simulate the fault is greater than the value of the insulation alarm threshold.	Use a resistance value that is lower than the insulation alarm threshold or modify the insulation alarm threshold.
	The fault is not detected between neutral and ground.	Start again ensuring you are between neutral and ground.
The product status LED is red and the display shows **WIRING CONNECTION LOST**.	No electrical installation has been connected to the electrical panel when commissioning.	• Check the connection on the injection terminal block (terminals 1 and 3) and restart the auto-test. • Disable the function during commissioning.
	The injection wire or the ground wire for the device is cut.	
	The device considers an electrical power system with low capacitance and high resistance to be a disconnected injection.	
The product status LED is red and the display indicates that an error occurred during the auto-test.	The device's injection circuit is cut off.	Briefly disconnect the auxiliary power supply to the device.
Although the device is being supplied with power, the product status LED does not light up.	Faulty indicator light.	Restart the auto-test and check that the product status LED lights up briefly.
The alarm LED does not light up in the event of a fault.	Faulty indicator light.	Restart the auto-test and check that the alarm LED lights up briefly.
Nuisance alarms	Highly disturbed ungrounded power systems with potential power quality issues	Check the value of the filtering. Modify the filtering as appropriate.
Slow device response time	The filtering is not appropriate.	Check the value of the filtering. Modify the filtering as appropriate.

Specifications

This section provides additional specifications for your device and accessories.

The information contained in this section is subject to change without notice. You can download updated documentation from www.se.com or contact your local Schneider Electric representative for the latest updates.

See your device's installation sheet for specifications related to installation, such as measured current and voltage ranges, inputs/outputs and control power information.

System type to be monitored

AC or combined AC/DC ungrounded [4] power systems	Phase-to-phase voltage with device connected to neutral	≤ 600 V AC max [4], [5] or ≤ 1700 V AC [6]
	With device connected to phase	≤ 480 V AC max [4], [5] or ≤ 1000 V AC [6]
	Frequency (AC power system)	45...440 Hz
DC or rectified IT power systems	–	< 345 V DC max [4], [5] or ≤ 1000 V DC [6]

Electrical characteristics

Range for insulation resistance readings		0.1 kΩ...10 MΩ
Range for capacitance readings (IM20 only)		0.1...60 µF
Fault notification	Number of thresholds	2 (password protected)
	Preventive insulation alarm threshold	1 kΩ...1 MΩ
	Insulation alarm threshold	0.5...500 kΩ
Insulation alarm threshold and preventive insulation alarm hysteresis		20%
Response time		Less than or equal to the **Filtering** setting: 4s / 40s / 160s
Device operating test		Auto-testing and manual testing
Internal impedance		110 kΩ (at 50 Hz)
Failsafe feature [7]		1 (standard)
Output contact	Number	1 (standard or failsafe)
	Type of contact	Changeover
	Breaking capacity	6 A @ 250 V AC
	Minimum switching load	6 A @ 12...24 V DC
Injection inhibition input (IM20 only)	Voltage supplied	24 V DC
	Current	5 mA
Circuit breaker position	Minimum load	5 mA
Notification time delay		0...7200 s
Auxiliary power supply voltage	45...400 Hz	110...300 V LN / 415 V LL AC ±15%
	DC	125...250 V DC ±15%
Burden		12 VA
Measurement voltage peak		75 V
Measurement current peak		0.6 mA
Dielectric withstand		4000 V AC / 5500 V DC

(4) When the insulation monitoring device is linked to a non-insulated variable speed drive, the DC value and not the AC value must be used as the limit.
(5) Direct connection of the IM10 or IM20 device to the system to be monitored.
(6) IM20 used with a high voltage adapter IM20-1700.
(7) Failsafe: the relay is deactivated either when a fault has occurred or if the auxiliary power supply voltage has disappeared accidentally.

Mechanical characteristics

Weight	0.25 kg (0.55 lb)
Mounting methods	Panel or DIN rail
IP degree of protection	IP52 (front)
Mounting position	Vertical

Environmental characteristics

Operating temperature	• -25...+55°C • -25...+65°C (8)
Storage temperature	-40...+70°C
Climatic conditions (9)	IEC 60068
Location	For indoor use only
Altitude	≤ 3000 m (9843 ft)
Pollution degree	2

Other

Overvoltage category		CAT III
Standards	Product	IEC 61557-8
	EMI / EMC	IEC 61326-2-4
	Safety	IEC 61010-1 (10)
	Installation	IEC 60364-4-41

(8) With IM20-1700 voltage adaptor and 230 V ±15 % auxiliary supply
(9) The device is suitable for use in all climates:
- Damp, equipment not operating (IEC 60068-2-30)
- Damp heat, equipment operating (IEC 60068-2-78)
- Salt mist (IEC 60068-2-52)

(10) The rated operational voltage is 300 V L-N under the IEC 61010-1 standard.

China Standard Compliance

This product complies with the following standards in China:

BS/EN/IEC 61557-8 Electrical safety in low voltage distribution systems up to 1 000 V a.c. and 1 500 V d.c. - Equipment for testing, measuring or monitoring of protective measures - Part 8: Insulation monitoring devices for IT systems

Schneider Electric
35 rue Joseph Monier
92500 Rueil Malmaison
France

+ 33 (0) 1 41 29 70 00

www.se.com

As standards, specifications, and design change from time to time, please ask for confirmation of the information given in this publication.

© 2025 – Schneider Electric. All rights reserved.

VIGED310022EN-06