# Vigilohm IM400 series

## Insulation monitoring device

## User manual

**7EN02-0493-00**
**03/2024**

www.se.com

# Legal Information

The information provided in this document contains general descriptions, technical characteristics and/or recommendations related to products/solutions.

This document is not intended as a substitute for a detailed study or operational and site-specific development or schematic plan. It is not to be used for determining suitability or reliability of the products/solutions for specific user applications. It is the duty of any such user to perform or have any professional expert of its choice (integrator, specifier or the like) perform the appropriate and comprehensive risk analysis, evaluation and testing of the products/solutions with respect to the relevant specific application or use thereof.

The Schneider Electric brand and any trademarks of Schneider Electric SE and its subsidiaries referred to in this document are the property of Schneider Electric SE or its subsidiaries. All other brands may be trademarks of their respective owner.

This document and its content are protected under applicable copyright laws and provided for informative use only. No part of this document may be reproduced or transmitted in any form or by any means (electronic, mechanical, photocopying, recording, or otherwise), for any purpose, without the prior written permission of Schneider Electric.

Schneider Electric does not grant any right or license for commercial use of the document or its content, except for a non-exclusive and personal license to consult it on an "as is" basis.

Schneider Electric reserves the right to make changes or updates with respect to or in the content of this document or the format thereof, at any time without notice.

**To the extent permitted by applicable law, no responsibility or liability is assumed by Schneider Electric and its subsidiaries for any errors or omissions in the informational content of this document, as well as any non-intended use or misuse of the content thereof.**

# Safety information

## Important information

Read these instructions carefully and look at the equipment to become familiar with the device before trying to install, operate, service, or maintain it. The following special messages may appear throughout this manual or on the equipment to warn of potential hazards or to call attention to information that clarifies or simplifies a procedure.

The addition of either symbol to a “Danger” or “Warning” safety label indicates that an electrical hazard exists which will result in personal injury if the instructions are not followed.

This is the safety alert symbol. It is used to alert you to potential personal injury hazards. Obey all safety messages that accompany this symbol to avoid possible injury or death.

**⚠⚠DANGER**

**DANGER** indicates a hazardous situation which, if not avoided, **will result in** death or serious injury.

**Failure to follow these instructions will result in death or serious injury.**

**⚠WARNING**

**WARNING** indicates a hazardous situation which, if not avoided, **could result in** death or serious injury.

**⚠CAUTION**

**CAUTION** indicates a hazardous situation which, if not avoided, **could result in** minor or moderate injury.

***NOTICE***

NOTICE is used to address practices not related to physical injury.

## Please note

Electrical equipment should be installed, operated, serviced and maintained in restricted access locations only by qualified personnel. No responsibility is assumed by Schneider Electric for any consequences arising out of the use of this equipment. A qualified person is one who has skills and knowledge related to the construction, installation, and operation of electrical equipment and has received safety training to recognize and avoid the hazards involved.

# Notice

## FCC

**NOTE:** Applicable for IM400L.

This equipment has been tested and found to comply with the limits for a Class A digital device, pursuant to Part 15 of the FCC rules. These limits are designed to provide reasonable protection against harmful interference when the equipment is operated in a commercial environment. This equipment generates, uses, and can radiate radio frequency energy and, if not installed and used in accordance with the instruction manual, may cause harmful interference to radio communications. Operation of this equipment in a residential area is likely to cause harmful interference in which case the user will be required to correct the interference at his own expense.

The user is cautioned that any changes or modifications not expressly approved by Schneider Electric could void the user's authority to operate the equipment.

This digital apparatus complies with CAN ICES-3 (A) /NMB-3(A).

# About this manual

This manual discusses features of the Vigilohm IM400 insulation monitoring devices (IMDs) series and provides installation, commissioning, and configuration instructions.

This manual is intended for use by designers, panel builders, installers, system integrators, and maintenance technicians who are related with ungrounded electrical distribution systems featuring insulation monitoring devices (IMDs).

Throughout the manual, the term “IMD” and “device” refers to Vigilohm IM400, IM400C (fully coated product for harsh environments), IM400L (24...48 Vdc supply voltage), IM400THR (for monitoring medium voltage application), and IM400LTHR (24...48 Vdc supply voltage / for monitoring medium voltage application). All differences between the models, such as a feature specific to one model, are indicated with the appropriate model number or description.

This manual assumes you have an understanding of insulation monitoring and are familiar with the equipment and power system in which your device is installed.

Please contact your local Schneider Electric representative to learn what additional training opportunities are available for your devices.

Make sure you are using the most up-to-date version of your device’s firmware in order to access the latest features.

The most up-to-date documentation for your device is available for download from www.se.com.

### Related documents

| Document | Number |
|---|---|
| Instruction Sheet: Vigilohm IM400, IM400C, and IM400L Insulation Monitoring Device | S1B9007601 |
| Commissioning Guide: Vigilohm IM400 and IM400L Insulation Monitoring Device | 7EN02-0417 |
| Commissioning Guide: Vigilohm IM400C Insulation Monitoring Device | 7EN02-0418 |
| Commissioning Guide: Vigilohm IM400C in M-RW-PV mode | 7EN02-0492 |
| Instruction Sheet: Vigilohm IM400THR and IM400LTHR Insulation Monitoring Device | QGH8990201 |
| Commissioning Guide: Vigilohm IM400THR and IM400LTHR Insulation Monitoring Device | 7EN02-0419 |
| Vigilohm Catalog | PLSED310020EN, PLSED310020FR |
| The IT earthing system: a solution to improve industrial electrical network availability - Application guide | PLSED110006EN |
| Système de liaison à la terre IT - Une solution pour améliorer la disponibilité des réseaux électriques dans l’industrie - Guide d’application | PLSED110006FR |
| System earthings in LV Les schémas des liaisons à la terre en BT (régimes du neutre) | Cahier technique n° 172 |
| The IT system earthing (unearthed neutral) in LV Le schéma IT (à neutre isolé) des liaisons à la terre en BT | Cahier technique n° 178 |

# Table of Contents


Safety precautions ..... 9
Introduction ..... 10
- Ungrounded power system overview ..... 10
- Insulation resistance (R) monitoring ..... 10
- Leakage capacitance (C) monitoring ..... 10
- Device overview ..... 11
- Hardware overview ..... 12
- Supplemental information ..... 13
- Accessories ..... 13

Description ..... 17
- Dimensions ..... 17
- Flush-mounting and dismounting ..... 17
- Mounting and dismounting from a Grid ..... 19
- Wiring diagram ..... 20

Application ..... 23
- Example application: Ungrounded power system insulation monitoring ..... 23
- Example application: Ungrounded power system insulation monitoring and the alarm output is sent to a supervisor ..... 23
- Example application: Ungrounded power system insulation monitoring connected to a communication network ..... 24
- Example application: Ungrounded power system insulation monitoring and the insulation fault location is sent to a supervisor ..... 25
- Example application: Ungrounded power system insulation monitoring and the insulation fault location connected to a communication network ..... 25

Human Machine Interface (HMI) ..... 27
- Vigilohm IM400, IM400C, and IM400L menu ..... 27
- Vigilohm IM400THR and IM400LTHR menu ..... 28
- Display interface ..... 28
- Navigation buttons and icons ..... 29
- Information icons ..... 29
- Status screens ..... 30
- Special status screens ..... 33
- Parameter modification using the display ..... 35

Function ..... 37
- General configuration ..... 37
  - Date/Time ..... 37
  - Password ..... 37
  - Language ..... 37
  - Identification ..... 38
  - Display ..... 38
- Network configuration ..... 38
  - Application (**App**) ..... 39
  - **Filtering** ..... 40
  - **Locating** ..... 41
  - Voltage adaptor (**V. Adapt**) ..... 42

**Frequency** ..... 43
**Injection** ..... 43
High Resistance Grounding (**HRG**) ..... 43
Primary DC Resistance (**Pri. DC Resis**) ..... 44
Number of Transformer (**No. of Transfo**) ..... 44
Alarm configuration ..... 45
Insulation alarm (**Ins. Alarm**) and preventive insulation alarm (**Prev. Alarm**) thresholds ..... 45
Insulation alarm time delay (**Ins. Al. Delay**) and preventive insulation alarm time delay (**Prev. Al. Del.**) ..... 46
Disconnected injection (**Disconnect. Inj.**) ..... 47
I/O configuration ..... 47
Insulation alarm relay (**Ins. Al. Relay**) ..... 47
Preventive insulation alarm relay (**Prev. Al. Rel**) ..... 49
Relay assignment ..... 52
Injection inhibition input (**Inhibit. Input**) ..... 54
Acknowledge inhibition (**Ack Inhibit.**) ..... 60
Insulation alarm relay acknowledgement (**Ack Al. Relay**) ..... 60
Test with relays (**Test w. Relays**) ..... 62
Inhibition type (**Inhibit. Type**) ..... 62
R and C measurements ..... 62
Insulation measurements ..... 62
Effect of leakage capacitance and frequency disturbances on the measurement accuracy of R ..... 62
Monitoring Power system insulation ..... 63
Log ..... 64
Trends ..... 65
Reset ..... 66
Auto-test ..... 68
Communication ..... 70
Communication parameters ..... 70
Modbus functions ..... 70
Modbus register table format ..... 71
Modbus registers table ..... 71
Alarm event records ..... 81
Date and time (TI081 format) ..... 84
Commissioning, maintenance and troubleshooting ..... 86
Commissioning ..... 86
ON light indicator ..... 87
Disconnected injection detection ..... 88
Troubleshooting ..... 88
Functional safety standards compliance ..... 90
Safety standards compliance requirements ..... 90
Product installation and wiring ..... 91
Commissioning for functional safety standards compliance ..... 92
Specifications ..... 94
China Standard Compliance ..... 97

# Safety precautions

Installation, wiring, testing and service must be performed in accordance with all local and national electrical codes.

**⚠⚠DANGER**

**HAZARD OF ELECTRIC SHOCK, EXPLOSION, OR ARC FLASH**

- Apply appropriate Personal Protective Equipment (PPE) and follow safe electrical work practices. See NFPA 70E, CSA Z462 or other local standards.
- Turn off all power supplying this device and the equipment in which it is installed before working on or in the equipment.
- Always use a properly rated voltage sensing device to confirm that all power is off.
- Assume communications and I/O wiring are hazardous live until determined otherwise.
- Do not exceed the maximum ratings of this device.
- Disconnect all the device's input and output wires before performing dielectric (hi-pot) or Megger testing.
- Never shunt an external fuse or circuit breaker.

**Failure to follow these instructions will result in death or serious injury.**

**NOTE:** See IEC 60950-1, Annex W for more information on communications and I/O wiring connected to multiple devices.

**⚠WARNING**

**UNINTENDED OPERATION**

Do not use this device for critical control or protection of persons, animals, property or equipment.

**Failure to follow these instructions can result in death, serious injury, or equipment damage.**

***NOTICE***

**EQUIPMENT DAMAGE**

- Do not open the device case.
- Do not attempt to repair any components of the device.

**Failure to follow these instructions can result in equipment damage.**

# Introduction

## Ungrounded power system overview

Ungrounded power system is an earthing system, which increases continuity of service of power systems and protection of people and property.

This system varies from country to country, including some applications where this system is mandated, such as hospital and the naval applications. This system is typically used in instances where the unavailability of power could result in lost production or incur significant downtime costs. Other potential applications are when there is a need to minimize the risk of fire and explosion. Lastly, this system is chosen in certain cases because it can facilitate preventive and corrective maintenance operations.

The system transformer's neutral is isolated from earth, or there is a high impedance between the neutral and earth, while the electrical load frames are earthed. This isolates the transformer and the load such that if the first fault occurs there is no loop for shorting current to flow, allowing the system to continue to operate normally without hazard to people and equipment. This system must have very low network capacitance to ensure that the first fault current cannot generate significant voltage. However, the faulty circuit must be detected and repaired before a second fault occurs. Because this system can tolerate an initial fault, maintenance operations can be improved and carried out in a safe and convenient manner.

## Insulation resistance (R) monitoring

Ungrounded power system require insulation monitoring to identify when the first insulation fault has occurred.

In ungrounded power system, the installation must either be ungrounded or must be grounded using a sufficiently high level of impedance.

In the event of only one ground or earth fault, the fault current is very low and interruption is unnecessary. However, given that a second fault could potentially cause the circuit breaker to trip, an insulation monitoring device has to be installed to indicate an initial fault. This device triggers an audible and/or a visual signal.

By constantly monitoring the insulation resistance, you can keep track of the system quality, which is a form of preventive maintenance.

## Leakage capacitance (C) monitoring

Ungrounded power systems is adversely affected by leakage capacitance.

Ungrounded power system must meet the following conditions to ensure protection from indirect contact:

$R_A \times I_d \leq 50$ V AC and $R_A \times I_d < 120$ V DC

- $R_A$ is the resistance value of the equipment grounding connection, in Ohms.
- $I_d$ is the ground fault current, in Amps.
- 50 V is the maximum acceptable voltage for indirect contacts.

For a three-phase ungrounded power system, the indirect contact fault current $I_d$ is:

$I_d = 2\pi \times F \times C \times V$

- F is the frequency of the power system.
- C is the earth leakage capacitance.

- V is the phase-to-neutral voltage.

Combining these, the ungrounded power system must meet the following condition:

$2\pi \times F \times C \times V \times R_A \leq 50\ V$

It is important that the equipment grounds have low resistance, and that the ungrounded power system leakage capacitance must be monitored and kept to a low value.

For more information, see Cahier Technique No. 178.

# Device overview

The device is a digital insulation monitoring device (IMD) for low-voltage and medium-voltage ungrounded power systems. The device monitors the insulation of a power system and notifies any insulation faults as soon as they occur.

IMD applies low-frequency AC voltage between the power system and the ground to provide accurate insulation monitoring in complex applications. The insulation is then assessed on the basis of the current value returned. This method is used for all power system types - AC, DC, combined, rectified, with a variable speed drive, etc.

The device offers the following features:

- Insulation resistance display (R)
- Detection of insulation faults in accordance with a configurable threshold
- Leakage capacitance display (C) with associated impedance (Zc) [1]
- Communication via the Modbus RS-485 protocol
- Injection inhibition via logic input
- Insulation fault log
- Trending of the insulation resistance (R) from last hour and last day
- Quick setup of the monitoring parameters according to the applications
- Compatibility with voltage adaptor (Umax = 1,700 Vac Ph-Ph or Umax = 1,200 Vdc)
- Compatibility with P1N ground adaptor and voltage transformer (Umax = 33 kVac) [2]

1. Applicable for IM400, IM400C, and IM400L
2. Applicable for IM400THR and IM400LTHR

# Hardware overview

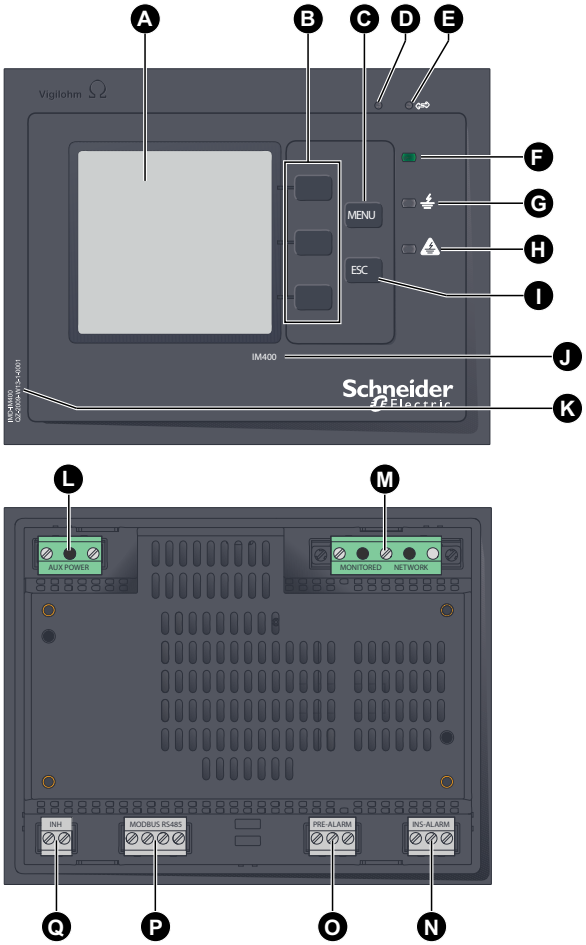


| | |
|---|---|
| A | Display |
| B | Contextual menu buttons |
| C | **Menu** button to go to the main menu |
| D | Red indicator light for device product status |
| E | Yellow indicator light for Modbus communication indication |
| F | Green indicator light for correct insulation indication |
| G | White indicator light for preventive insulation alarm |
| H | Yellow indicator light for insulation alarm |
| I | **Esc** button to return to the previous menu or cancel a parameter entry |
| J | Product catalog number |
| K | Serial number |
| L | Auxiliary power supply terminal block |
| M | Injection terminal block |
| N | Insulation alarm relay terminal block |
| O | Preventive insulation alarm relay terminal block |
| P | Modbus communication terminal block |
| Q | Injection inhibition input terminal block |

## Device commercial reference

| Model | Commercial reference |
|---|---|
| IM400 | IMD-IM400 |
| IM400L | IMDIM400L |
| IM400C | IMD-IM400C |
| IM400THR | IMDIM400THR |
| IM400LTHR | IMDIM400LTHR |

# Supplemental information

This document is intended to be used in conjunction with the instruction sheet that comes in the box with your device and accessories.

See your device's instruction sheet for information related to installation.

See your product's catalog pages at www.se.com for information about your device, its options and accessories.

You can download updated documentation from www.se.com or contact your local Schneider Electric representative for the latest information about your product.

# Accessories

Accessories are required depending on the type of installation on which the device is installed.

## Accessories list

| Accessory | Catalog number |
|---|---|
| Cardew C "440 V" surge limiter | 50171 |
| Cardew C "660 V" surge limiter [3] | 50172 |
| Cardew C "1000 V" surge limiter [3] | 50183 |
| Cardew C base [4] | 50169 |
| ZX impedance | 50159 |
| IM400-1700 voltage adaptor [5]<br>**NOTE:**<br>1. For PV applications, select HV1700C in the product HMI.<br>2. For Non PV applications, select HV1700 in the product HMI. | • IMD-IM400-1700<br>• IMD-IM400-1700C |
| PHT1000 voltage adaptor [6] | 50248 |
| IM400VA2 voltage adaptor [5] | IMD-IM400VA2 |
| P1N ground adaptor | PHA6326700 |
| Voltage transformer | See Note |

3. Compatible with IM400 when used with voltage adaptor IM400-1700 or PHT1000 or IM400VA2
4. Compatible with all Cardew C catalog numbers
5. For power systems with Umax > 480 Vac Ph-Neutral, or Umax > 830 Vac Ph-Ph, or Umax > 480 Vdc without insulation fault locator.
6. For power systems with Umax > 480 Vac Ph-Neutral, or Umax > 830 Vac Ph-Ph, or Umax > 480 Vdc with insulation fault locator.

**NOTE:**

- IM400C in M-RW-PV mode shall support PHT1000, IM400VA2 and IM400–1700C.
- P1N ground adaptor is applicable for IM400THR and IM400LTHR.
- For information regarding automatic and mobile insulation fault locating accessories, see **Locating**, page 41.
- Voltage transformers must be selected appropriately depending on system voltage. Refer to the Schneider Electric Medium Voltage Transformer catalogue.

# Cardew C surge limiter

| | | | | |
|---|---|---|---|---|
| **Function** | Cardew C is used if the insulation monitoring device is connected to the secondary connection of an MV/LV transformer (according to the rules and conventions that apply in the various countries).<br><br>It protects the low-voltage (LV) installation against over voltage hazards. It is connected to the secondary connection of the transformer. Cardew C can be used on the following systems:<br>• U < 1000 V AC<br>• U < 300 V DC | | | |
| **Selection table** | **Un: Nominal Phase-to-Phase Voltage of AC System** | | **Ui: Arcing Voltage** | **Type of Cardew C** |
| | Accessible neutral | Not accessible neutral | | |
| | U ≤ 380 V | U ≤ 220 V | 400 V < Ui ≤ 750 V | 250 V |
| | 380 V < U ≤ 660 V | 220 V < U ≤ 380 V | 700 V < Ui ≤ 1,100 V | 440 V |
| | 660 V < U ≤ 1,000 V | 380 V < U ≤ 660 V | 1,100 V < Ui ≤ 1,600 V | 660 V |
| | 1,000 V < U ≤ 1,560 V | 660 V < U ≤ 1,000 V | 1,600 V < Ui ≤ 2,400 V | 1,000 V |
| **Dimensions** | 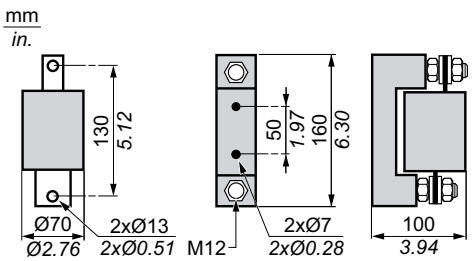 | | | |
| **Mounting** | • Cardew C mounted directly on busbars<br>• Mounting with plate-mounted base | | | |
| **Connection** | 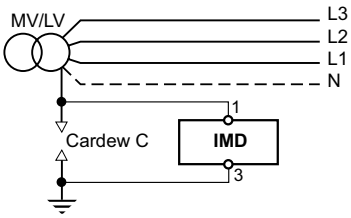 | | | |

# ZX limiting impedance

| | |
|---|---|
| **Function** | ZX limiting impedance enables you to create an installation with a high-impedance grounded neutral system (1500 Ω at 50 Hz).<br>ZX limiting impedance remains connected during insulation fault locating at 2.5 Hz:<br>• 1500 Ω at 50 Hz<br>• 1 MΩ at 2.5 Hz<br>The ZX impedance must be used on systems with U ≤ 500 Vac. |
| **Dimensions** | 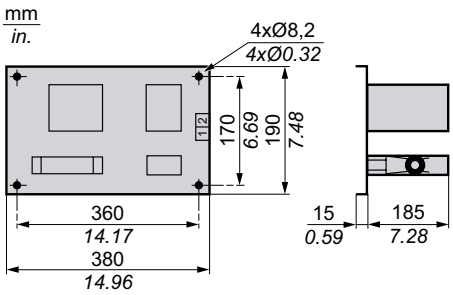 |
| **Mounting** | On mounting plate |
| **Connection** | 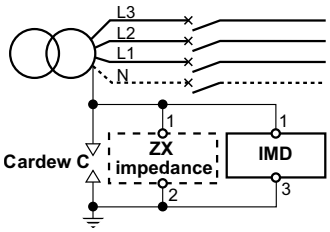 |

# Voltage adaptor

The optional voltage/ground adaptors are:

- IM400–1700
- PHT1000
- IM400VA2
- P1N

| | | | | |
|---|---|---|---|---|
| **Function** | The IM400–1700, PHT1000, and IM400VA2 voltage adaptors can be used to connect a IMD to ungrounded systems higher than 480 V AC. The wire connecting IM400–1700, IM400VA2, or P1N to IMD has to have the same voltage rating as the monitored network. The P1N ground adaptor must be connected with the system for the operation of IM400THR and IM400LTHR. The compatibility of voltage adaptors with insulation fault location is as follows:<br>• The IM400–1700, IM400VA2, and P1N voltage adaptors are not compatible with insulation fault location.<br>• The PHT1000 voltage adaptor is compatible with insulation fault location. | | | |
| **Dimensions** | IM400–1700<br> 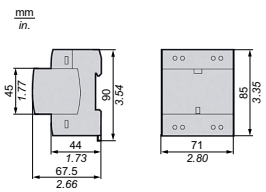 | PHT1000<br> 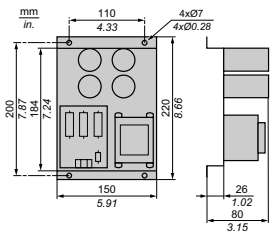 | IM400VA2<br> 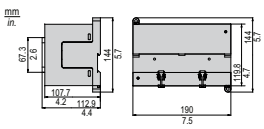 | P1N<br> 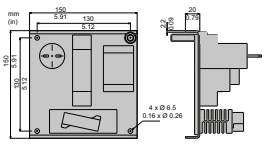 |
| **Mounting** | On DIN rail | On mounting plate | On DIN rail or mounting plate | On mounting plate |

| | | | | |
|---|---|---|---|---|
| **Connection** | Wiring diagram, page 20 | Wiring diagram, page 20 | Wiring diagram, page 20 | Wiring diagram, page 20 |
| | 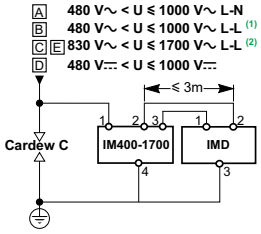 | 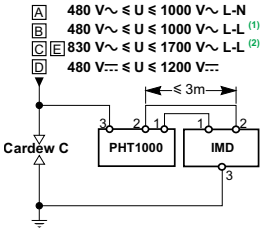 | 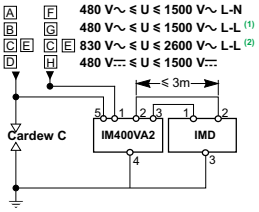 | |
| | (1) Voltage adaptor connected to a phase<br>(2) Voltage adaptor connected to neutral | | | |

# S3 subassembly (retrofit)

Insulation alarm thresholds of the device has to be set higher than 2 kΩ to take into account internal impedance of the no longer commercialized S3 subassembly.

# Description

## Dimensions

Device dimensions and cut-out for flush mount is illustrated in the following figure:

**NOTE:** All dimensions are measured in mm (in).

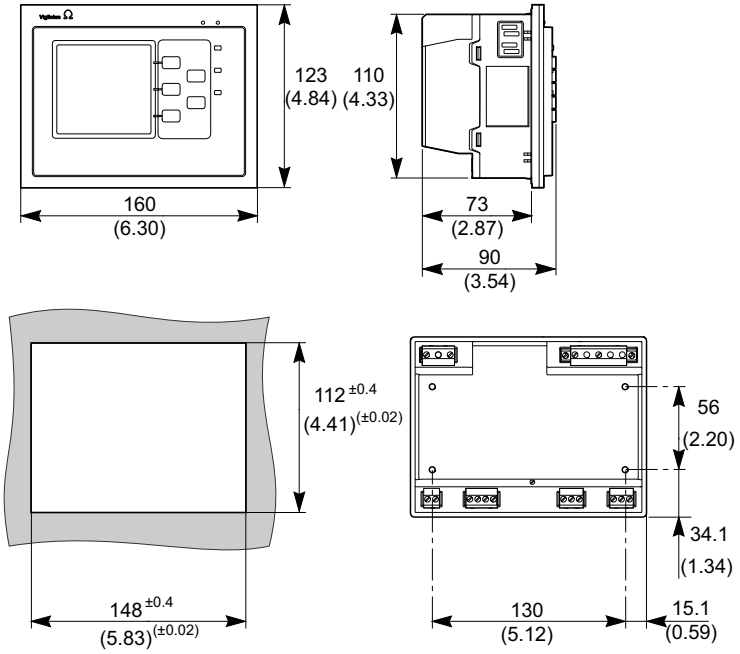


Observe the correct distances between devices for flush-mounting as per the following figure:

**NOTE:** All dimensions are measured in mm (in).

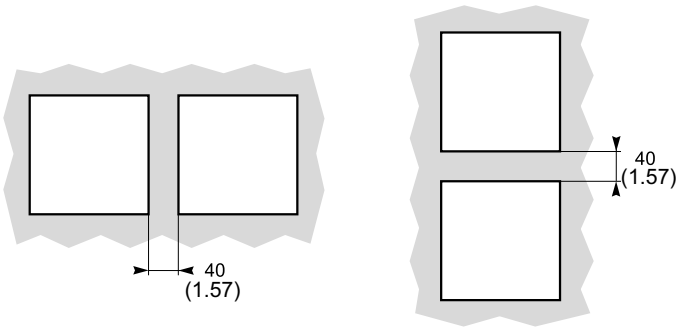


## Flush-mounting and dismounting

You can attach the device to any flat, rigid vertical support using the 3 spring clips supplied. You must not tilt the device after installation. To free up space for control gear, you can attach the device to the front panel of the floor-standing or wall-mounted enclosure. For USA and Canada, the device mounting should be open type only.

## Mounting

Before installing the device, check the following:

- The mounting plate must have a thickness of between 0.8 (0.03) and 3.2 (0.13) mm (in).

- A rectangle measuring 148 (5.83) x 112 (4.41) mm (in) must be cut out from the plate so the device can be installed.
- No terminal blocks may be connected to the unit.

1. Insert the device in the cut-out in the mounting plate by tilting the device forward slightly.

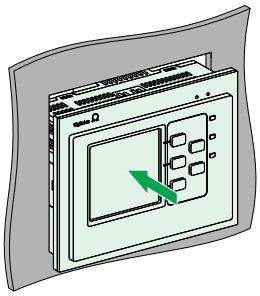

2. Depending on the thickness of the mounting plate, clip the spring clips into the mounting slots on the top of the device as follows:

| Mounting plate thickness | Fixing slots to be used |
|---|---|
| 0.8 mm ≤ X ≤ 2 mm<br>(0.031 in ≤ X ≤ 0.079 in) | 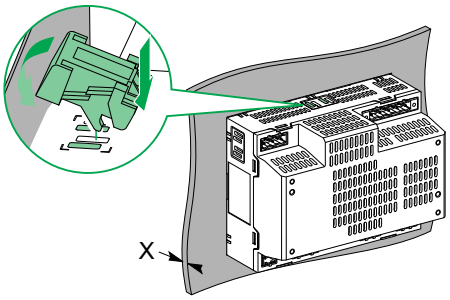 |
| 2 mm < X ≤ 3.2 mm<br>(0.079 in < X ≤ 0.126 in) | 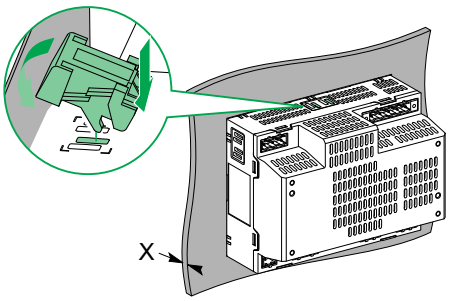 |

3. Clip the 2 spring clips on the side of the device and the 2 spring clips on the bottom of the device.

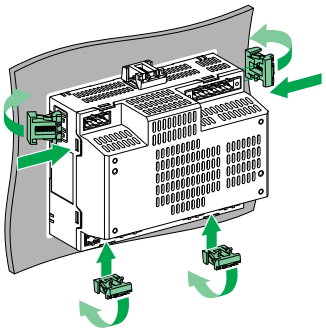

4. Do the wiring and insert the terminal blocks as shown in the relevant wiring diagram (See Wiring diagram, page 20).

# Dismounting

1. Disconnect the terminal blocks from the device.
2. Insert the blade of a screwdriver between the spring clip and the device and use the screwdriver as a lever to release the spring clip. Release the spring clips at the top and bottom of the device.

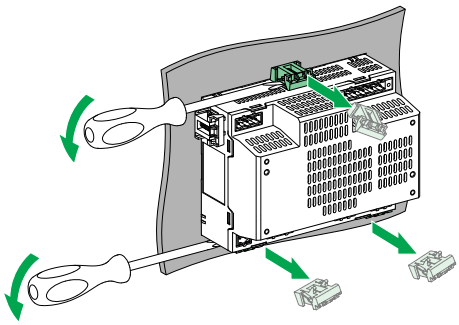

3. Release the 2 spring clips at the side of the device.

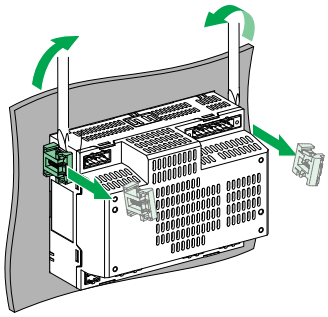

4. Remove the device from the mounting plate.

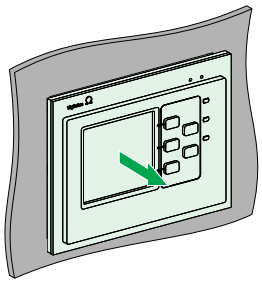

5. Reinsert the terminal blocks and make sure that the correct positions on the device are observed (See Hardware overview, page 12).

# Mounting and dismounting from a Grid

You can install the device on a grid using fixing brackets (reference 01199 Prisma catalog) or equivalent. The device must not be tilted after installation.When mounting or dismounting the device, you can keep the terminal blocks connected and wired up, or you can remove them. For USA and Canada, the device mounting should be open type only.

# Mounting

1. Position the fixing brackets on the device and tighten the screws and washers as illustrated (tightening torque: 1.2 N.m (8.85 lb-in.).

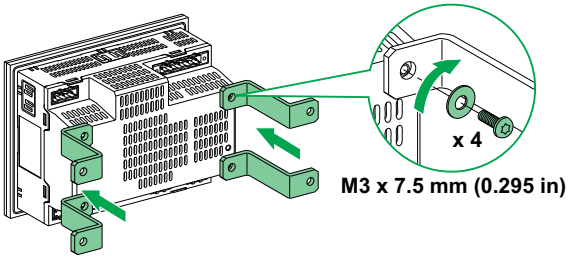


2. Attach the device to the grid using clamps.

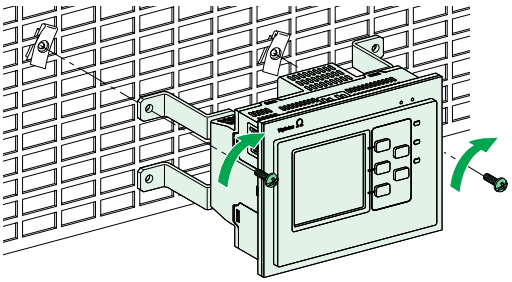

# Dismounting

1. Unscrew the clamps from the grid.
2. Unscrew the fixing brackets from the device.

# Wiring diagram

All the device wiring terminals have identical wiring capabilities. The following are the list of characteristics of the cables that can be used to connect the terminals:

- Stripped length: 7 mm (0.28 in)
- Cable cross sectional area: 0.2 to 2.5 $mm^2$ (24 to 14 AWG)
- Tightening torque: 0.8 N.m (7.1 lb-in)
- Type of screwdriver: Flat, 3 mm (0.12 in)

Cross-section area and voltage rating of wires must be suitable to the load current and to the voltage to which it is connected. The following characteristics need to be considered:

- Auxiliary power supply consumption: 25 VA / 10 Ω
- Current flowing to the monitoring network wiring terminal: less than 20 mA
- Current flowing to the injection inhibition wiring terminal: 5 mA
- Current flowing to the insulation alarm and to the preventive insulation alarm wiring terminals depends on the power rating of the insulation alarm indicator.

The illustration shows the connection of the device to a single-phase or three-phase 3- or 4-wire power system, or a DC power system.

Wiring diagram of IM400, IM400C, IM400L, IM400THR, and IM400LTHR

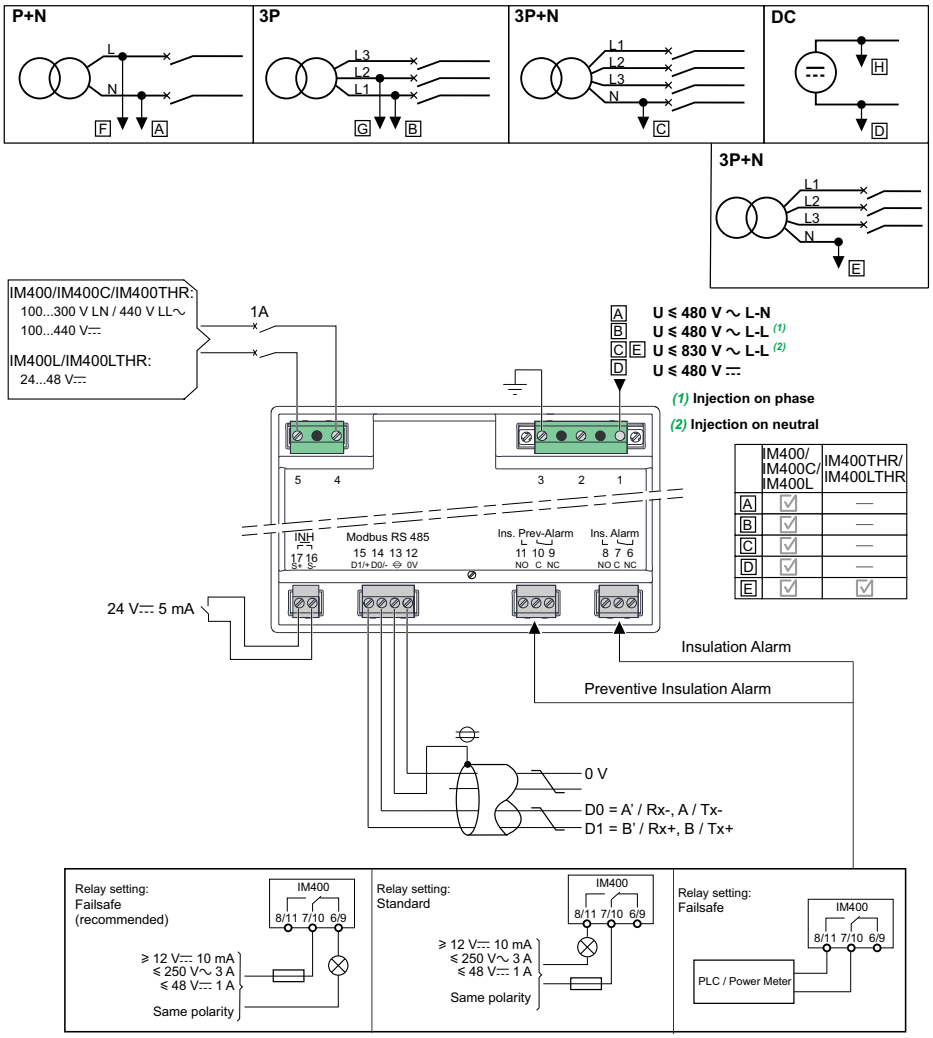


**NOTE:** Circuit breakers (reference MGN61334 or equivalent) can be used to replace listed fuses.

Wiring diagram of IM400THR and IM400LTHR for medium voltage

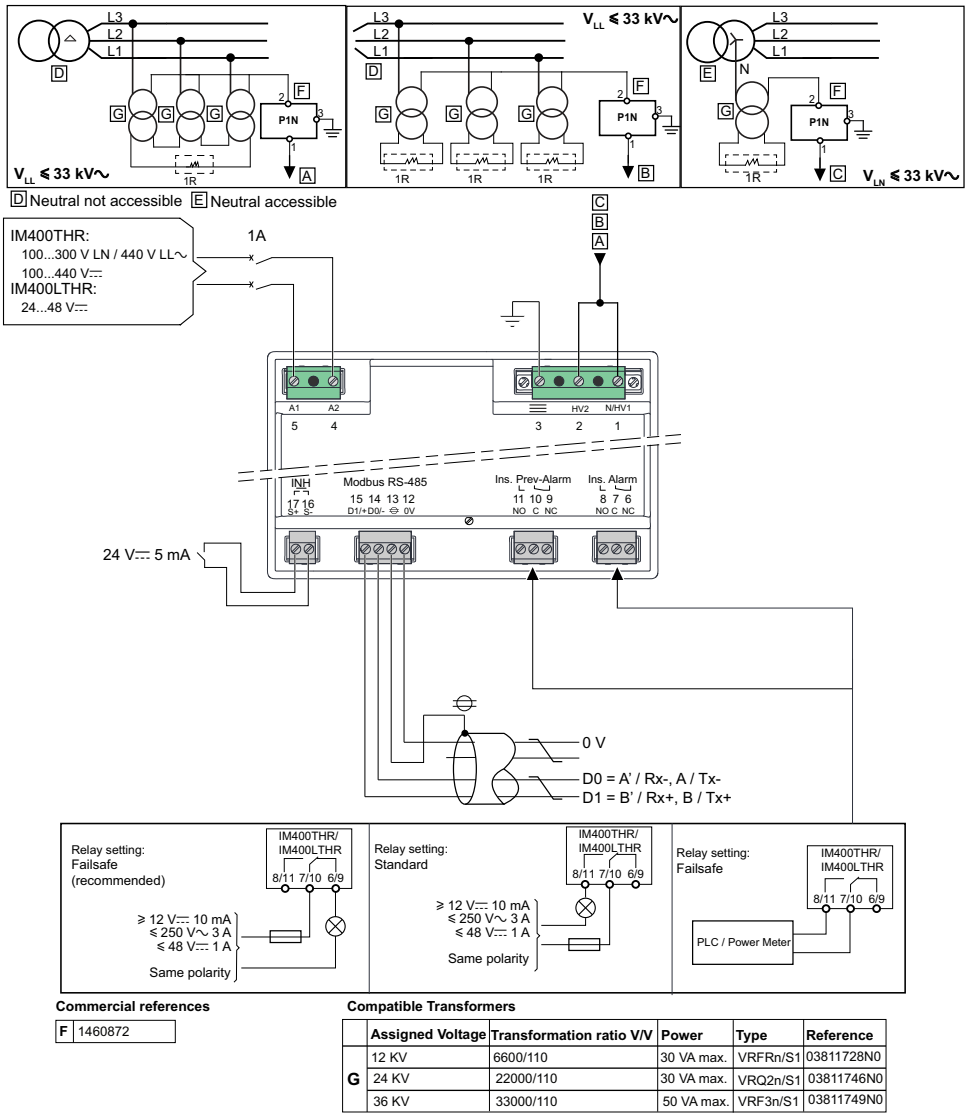


**Commercial references**

| | |
|---|---|
| F | 1460872 |

**Compatible Transformers**

| | Assigned Voltage | Transformation ratio V/V | Power | Type | Reference |
|---|---|---|---|---|---|
| G | 12 KV | 6600/110 | 30 VA max. | VRFRn/S1 | 03811728N0 |
| | 24 KV | 22000/110 | 30 VA max. | VRQ2n/S1 | 03811746N0 |
| | 36 KV | 33000/110 | 50 VA max. | VRF3n/S1 | 03811749N0 |

Voltage transformers and P1N ground adaptor are used to connect IM400THR to systems with voltages rated up to 33 kVac. Voltage transformers should be selected appropriately depending on system voltage. Refer to the Schneider Electric medium voltage transformer catalogue.

**NOTE:** Ensure that maximum voltage between pins 2 and 3 of P1N ground adaptor is less than 250 Vac, 400 Vdc.

The Load Resistance '1R' of the Voltage Transformer is calculated based on its characteristics. Refer to the calculation notes on www.se.com/IM400THR for more information.

# Application

This section explains the following examples of the insulation monitoring applications for an ungrounded power system:

- Standalone IMD
- IMD and the insulation alarm and preventive insulation alarm outputs are sent to a supervisor
- IMD connected to a communication network
- IMD and the insulation alarm and preventive insulation alarm outputs are sent to a supervisor, and locating the insulation fault is done using an XD301, XD312, or IFL[7] automatic fault location and an XRM mobile fault locator
- IMD connected to a communication network, and locating the insulation fault is done using an XD308C or IFL[8] insulation fault locator

## Example application: Ungrounded power system insulation monitoring

You can use an IMD to monitor an ungrounded power system.

An ungrounded power system is a system involving the use of a transformer whose neutral is not connected to ground.

The insulation is monitored by an IMD having the following characteristics:

- It is generally powered by the system that it monitors.
- It is connected to neutral (or to one phase) and ground.
- Its only setting is the fault threshold level. The preventive insulation alarm threshold can also be set.
- It has a single relay output to a light or a buzzer.

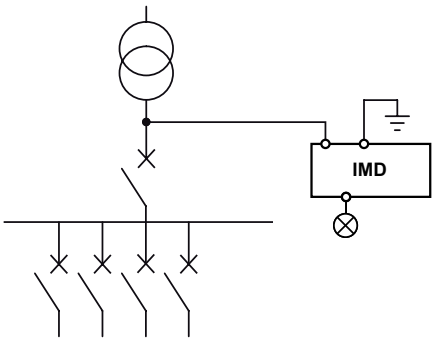


## Example application: Ungrounded power system insulation monitoring and the alarm output is sent to a supervisor

You can use an IMD to monitor an ungrounded power system and send the alarm to a supervisor.

An ungrounded power system is a system involving the use of a transformer whose neutral is not connected to ground.

7. Applicable models are IFL12, IFL12C, IFL12MC, IFL12LMC, IFL12MCT, and IFL12LMCT
8. Applicable models are IFL12C, IFL12MC, IFL12LMC, IFL12MCT, and IFL12LMCT

The insulation is monitored by an IMD whose insulation alarm and preventive insulation alarm outputs are connected to an available input on a networked device (For example: PLC). This device is connected to a supervisor via a communication network.

**NOTE:** In this scenario, only the insulation alarm and preventive insulation alarm information are available to the supervisor.

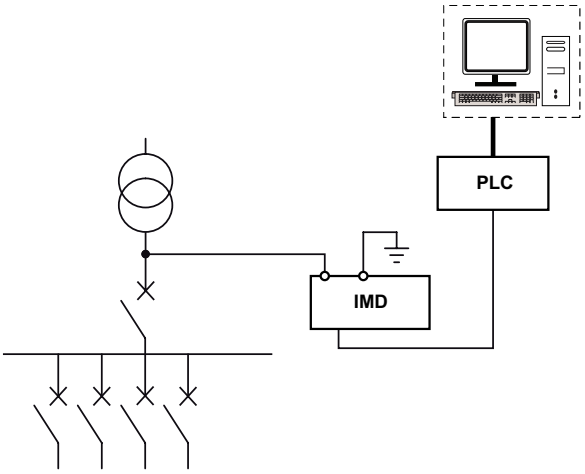


# Example application: Ungrounded power system insulation monitoring connected to a communication network

You can use an IMD to monitor an ungrounded power system and remotely provide display and configuration functionality.

An ungrounded power system is a system involving the use of a transformer whose neutral is not connected to ground.

When the IMD is linked to the supervisor via a Modbus connection, the following actions are supported:

- Display: The product status, the status of the insulation alarm (active, inactive, acknowledged), the status of the preventive insulation alarm, details of the last 30 time-tagged events, the values for R and C in order to create tables or curves for monitoring these values over variable periods
- Configure the product remotely. All the settings can be accessed remotely, with the exception of the Modbus parameters.

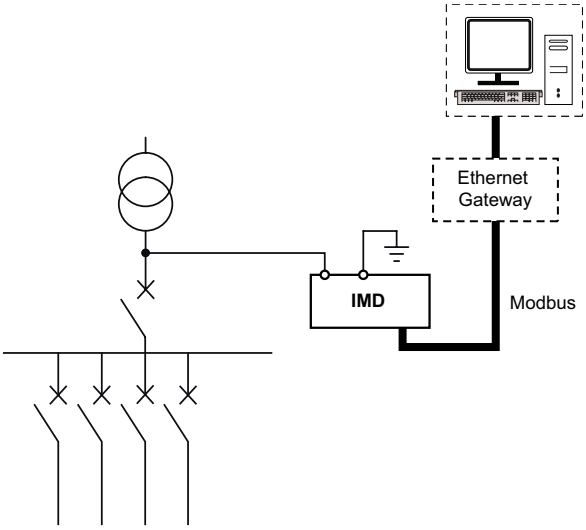


**NOTE:** Using an Ethernet gateway enables you to make use of an existing Ethernet network.

# Example application: Ungrounded power system insulation monitoring and the insulation fault location is sent to a supervisor

You can use an IMD and insulation fault locator to monitor an ungrounded power system and send the alarm to a supervisor.

An ungrounded power system is a system involving the use of a transformer whose neutral is not connected to ground.

The insulation is monitored by an IMD whose insulation alarm and preventive insulation alarm outputs are connected to an available input on a networked device (For example: PLC). This device is connected to a supervisor via a communication network.

Locating the insulation fault is done using XD301, XD312 or IFL devices. The XD301, XD312, or IFL[9] output relay is connected to an available input on a networked device.

The XRM mobile insulation fault locator is used to locate accurately the area where the insulation fault has occurred.

**NOTE:** In this scenario, only the insulation alarm, preventive insulation alarm, and faulty channel information are available to the supervisor.

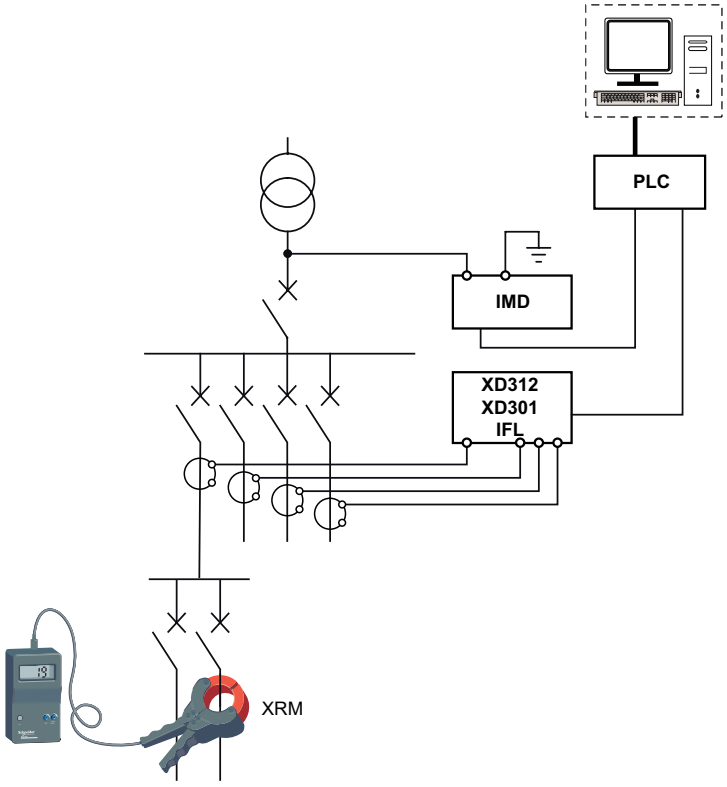


# Example application: Ungrounded power system insulation monitoring and the insulation fault location connected to a communication network

You can use an IMD to monitor an ungrounded power system and remotely provide display and configuration functionality.

9. Applicable models are IFL12, IFL12C, IFL12MC, IFL12LMC, IFL12MCT, and IFL12LMCT

An ungrounded power system is a system involving the use of a transformer whose neutral is not connected to ground.

When the IMD is linked to the supervisor via a Modbus connection, the following actions are supported:

- Display: The product status, the status of the insulation alarm (active, inactive, acknowledged), the status of the preventive insulation alarm, details of the last 30 time-tagged events, the values for R and C in order to create tables or curves for monitoring these values over variable periods
- Configure the product remotely. All the settings can be accessed remotely, with the exception of the Modbus parameters.

Using the XD308C insulation fault location device in addition with the XLI300 communication interface or IFL[10] allows also the supervisor to monitor remotely all the feeders and so to report precisely any insulation fault location.

The XRM mobile insulation fault locator is used to locate accurately the area where the insulation fault has occurred.

**NOTE:** Using an Ethernet gateway enables you to make use of an existing Ethernet network.

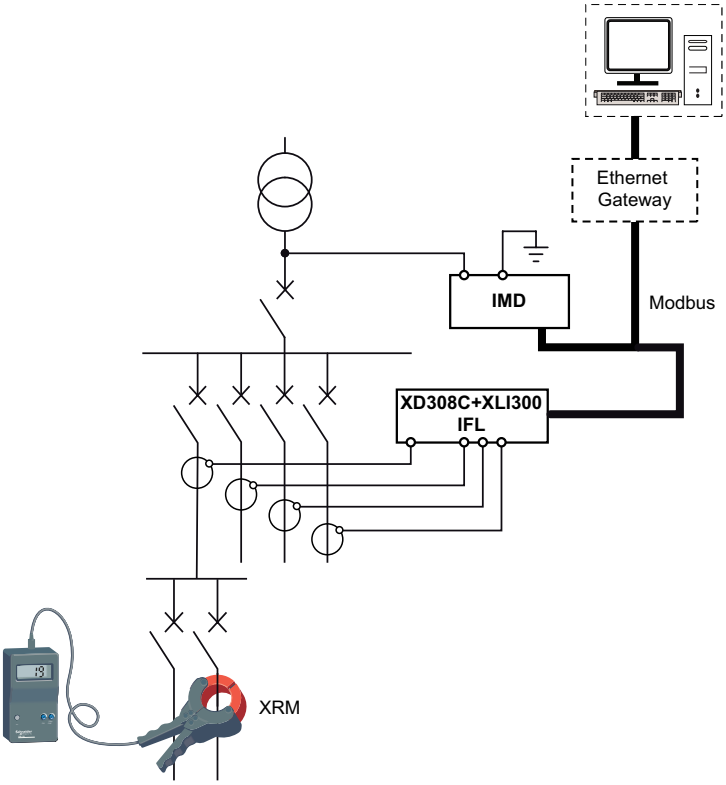


10. Applicable models are IFL12C, IFL12MC, IFL12LMC, IFL12MCT, and IFL12LMCT

# Human Machine Interface (HMI)

## Vigilohm IM400, IM400C, and IM400L menu

Using the device display, you can navigate through the different menus to perform basic setup on your device.

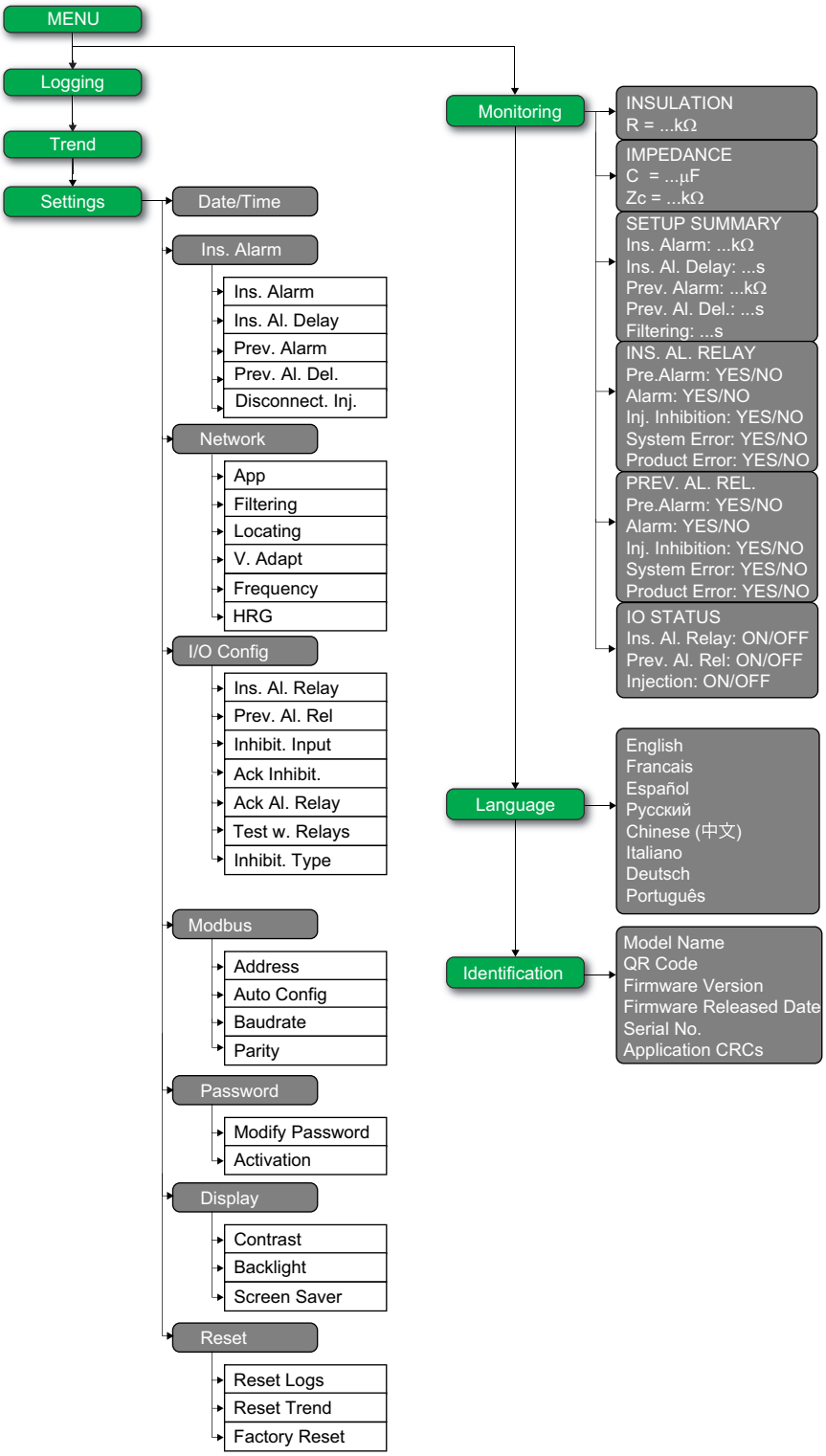

# Vigilohm IM400THR and IM400LTHR menu

Using the device display, you can navigate through the different menus to perform basic setup on your device.

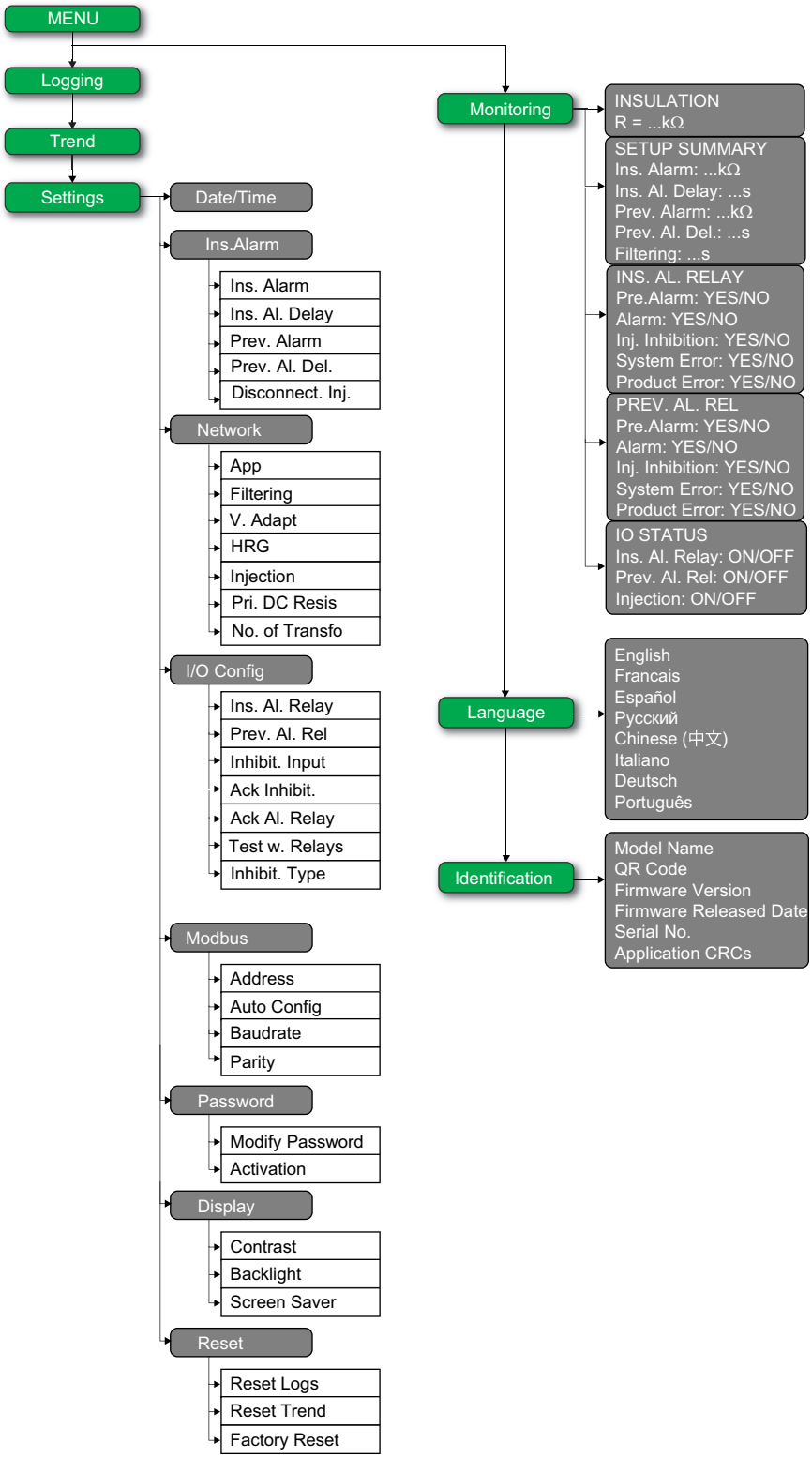


# Display interface

Use the device display to perform various tasks such as configuring the device, displaying status screens, acknowledging alarms, or viewing events.

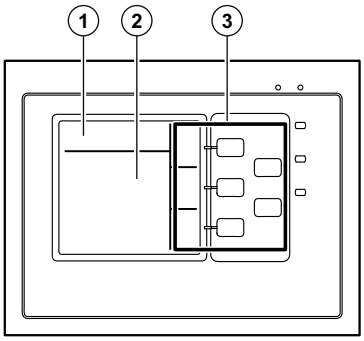


| | |
|---|---|
| 1 | Screen identification area containing a menu icon, and the name of the menu or the parameter |
| 2 | Information area displaying information specific to the screen (measurement, insulation alarm, settings) |
| 3 | Navigation buttons |

# Navigation buttons and icons

Use the display buttons to navigate through menus and perform actions.

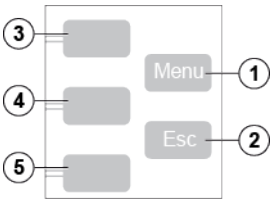


| Legend | Button | Icon | Description |
|---|---|---|---|
| 1 | **Menu** | – | Display the level 1 menu (**Menu**). |
| 2 | **Esc** | – | Go back to the previous level. |
| 3 | Contextual menu button 3 | | Scroll up the display or move to the previous item in a list. |
| | | | Access the date and time setting. If the clock icon flashes, it means that the Date/Time parameter needs to be set. |
| | | | Increase a numerical value. |
| 4 | Contextual menu button 2 | | Scroll down the display or move to the next item in a list. |
| | | | Move one digit to the left within a numerical value. If the digit on the far left is already selected, pressing the button loops you back to the digit on the right. |
| 5 | Contextual menu button 1 | | Validate the selected item.<br><br>Acknowledge the transient alarm. |
| | | | Run the auto-test manually. |
| | | | Go to a menu or submenu, or edit a parameter. |
| | | | Acknowledge the insulation alarm. |

# Information icons

Icons in the information area of the LCD display provide information such as what menu is selected and the insulation alarm status.

| Icon | Description |
|---|---|
| | Main menu |
| | • System resistance (in the absence of an insulation fault)<br>• Measurement parameters menu<br>• Monitoring menu<br>• System impedance<br>• System resistance as primary record in Logging page<br>• Setup Summary |
| | Fault log menu |
| | Trend menu |
| | Setting parameters menu and submenu |
| | Display language selection menu |
| | Product identification |
| | • Indication of an insulation alarm<br>• Indication of a preventive insulation alarm<br>• Indication of a transient alarm<br>• Indication of product status |

# Status screens

## Introduction

The default screen shows the insulation resistance value of the system. It is automatically replaced by a screen that notifies an insulation alarm. The screen backlight flashes to indicate an insulation alarm.

Each insulation measurement screen displays a status bar at the bottom that provides additional information.

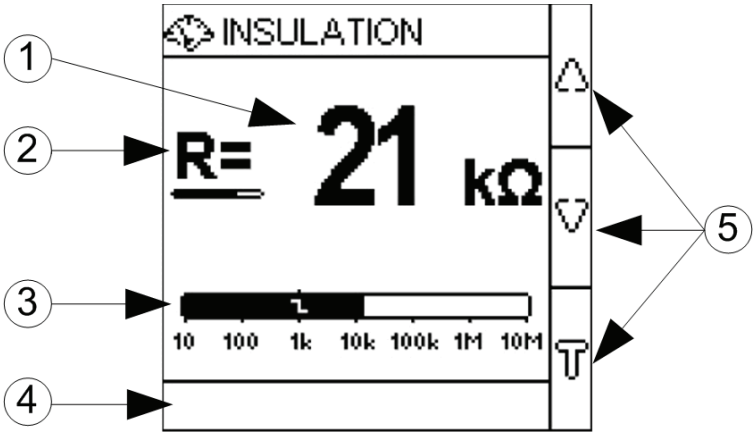


| | |
|---|---|
| 1 | Insulation value |
| 2 | Progress bar for the refresh time<br>**NOTE:** The progress bar is not displayed if the **Filtering** parameter is set to **4s** [11]/**2s** [12]. |
| 3 | Bargraph indicating the insulation level on a logarithmic scale. The symbol indicates the insulation alarm threshold value. |

11. Applicable for IM400, IM400C, and IM400L.
12. Applicable for IM400THR and IM400LTHR.

| | |
|---|---|
| 4 | Status bar displaying additional information related to the current insulation alarm state. Different types of status bar are as follows:<br>• Insulation alarm active time delay: an insulation fault has been measured and the insulation alarm time delay is active. This bar shows a progress bar for the time delay.<br>• Insulation alarm pickup date and time<br>• Insulation alarm dropout date and time<br>• Insulation alarm relay acknowledgment<br>The status bars can also indicate:<br>• a cyclic auto-test is running in the background<br>• a first measurement is in progress (at startup or after reactivating the injection function) |
| 5 | Contextual buttons for navigating the insulation screens or for launching a manual auto-test. |

## Insulation resistance measurement (R)

The device displays the insulation resistance measurement for the system by default.

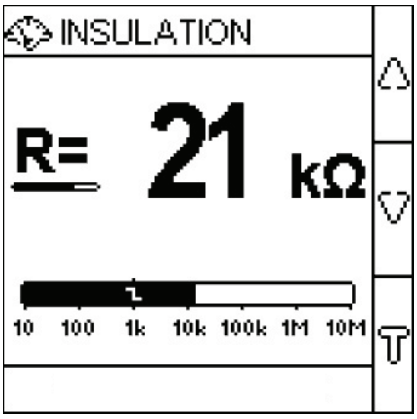


## Insulation alarm detected: insulation fault

The device displays the insulation fault screen when the insulation value falls below the insulation alarm threshold.

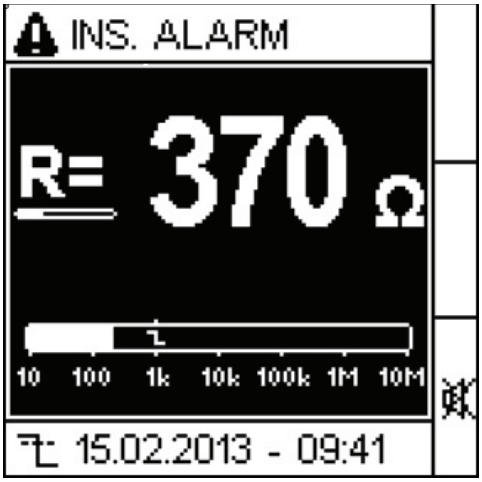


The screen flashes whenever an insulation alarm is detected.

There are two possible scenarios:

- Acknowledge the insulation alarm by pressing the button.
- If you do not acknowledge the insulation alarm and the system insulation returns to a value above the insulation alarm threshold, the screen displays transient fault.

## Insulation alarm acknowledged

This screen is displayed when you have acknowledged the insulation alarm. The status bar shows the time when the insulation fault is acknowledged.

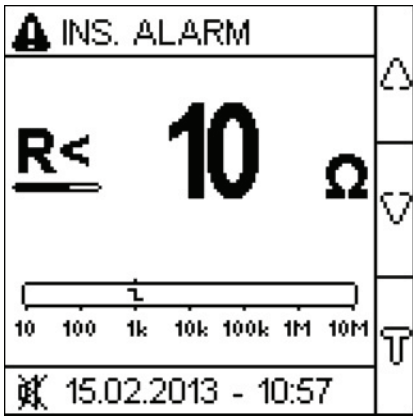


## Preventive alarm activated

This screen is displayed when the preventive alarm has been activated.

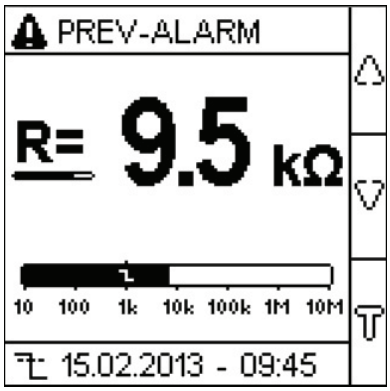


## Transient fault

This screen is displayed when a transient fault has occurred.

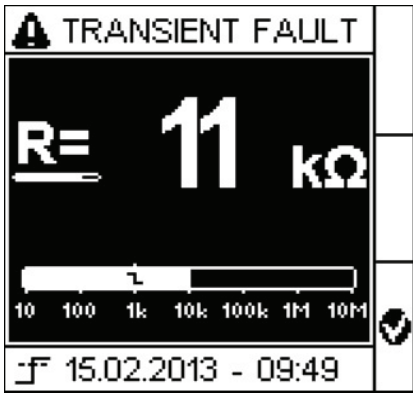


Acknowledge the transient fault by pressing the button.

# Special status screens

## Introduction

The special status screens are displayed depending on events that occur during the product life. The screens depend on the event type but always trigger the product status LED to red and the insulation alarm relay is active. If the preventive insulation alarm relay is configured in mirror mode, it is also triggered and no longer mirrors the insulation alarm relay.

## Over-limit capacitance detection

**NOTE:** This screen is applicable for IM400, IM400C, and IM400L.

The over-limit capacitance detection state is triggered when the capacitance of the monitored system becomes too high. For details on the device specification, refer to Specifications, page 94. In case of detected over-limit capacitance, the device can not monitor the system.

**Power Circuit or Control Ciruit**

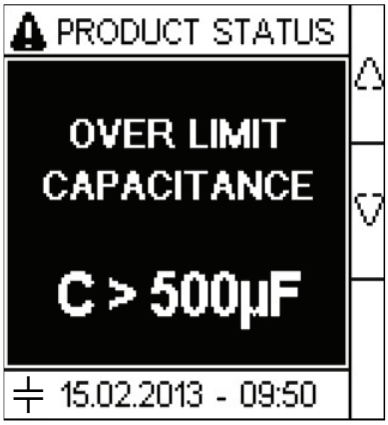


**Photovoltaic Circuit (IM400-1700)**

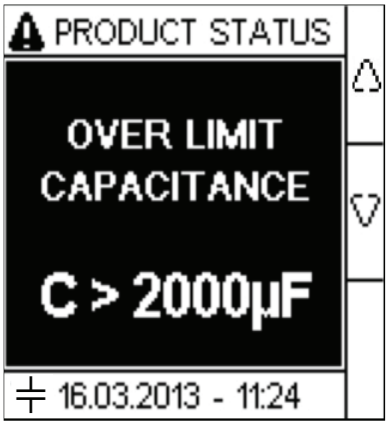


**Photovoltaic Circuit (IM400VA2)**

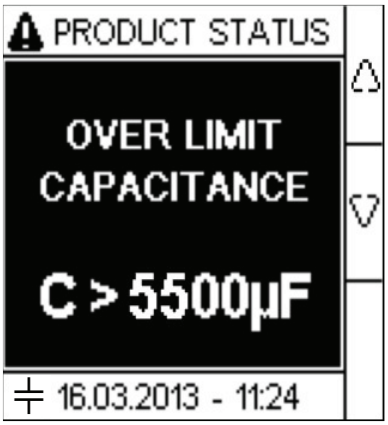


## Overvoltage

The overvoltage state is triggered when the voltage of the monitored system becomes too high. For details on the device specification, refer to Specifications, page 94. In case of overvoltage, the device can not monitor the system and the device automatically disconnects the power system. Disconnect the auxiliary power supply of device and reconnect.

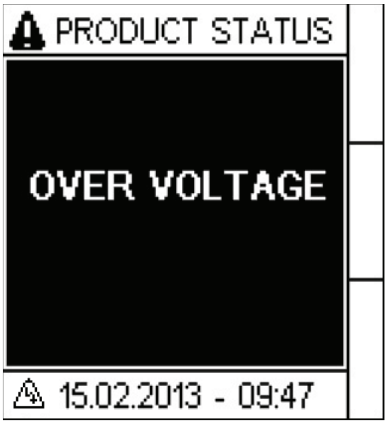


## Inoperative product

The inoperative product state is triggered when the device is inoperative.

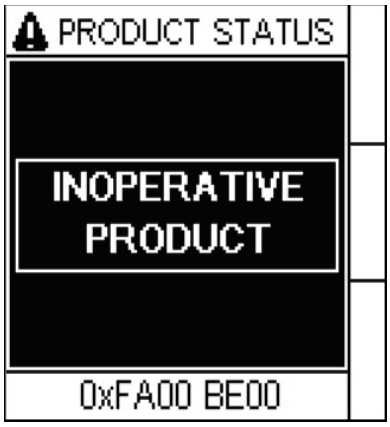

## Disconnected Injection Detection

The state of disconnected injection is triggered when the injection circuit of the device is interrupted. In case of disconnected injection detected, the device is no longer able to monitor the ungrounded system.

If the **Disconnect Inj.** parameter in the **Ins. Alarm** menu is set to **ON**, the following screen displays:

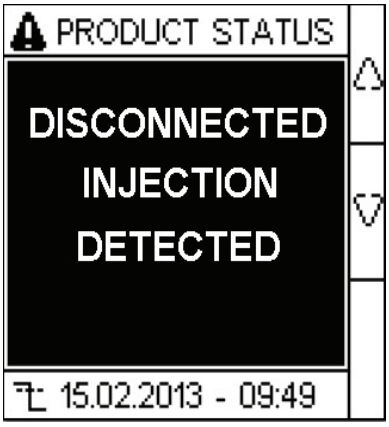


If the **Disconnect Inj.** parameter is set to **OFF**, the device displays **R > 10 MΩ**.

## HV1 and HV2 open detection

Applicable for IM400THR and IM400LTHR.

The HV1 and HV2 open detection is triggered when the terminals HV1 and HV2 are not shorted and the **V. Adapt** parameter in the **Network** menu is set to **P1N** (See Wiring diagram, page 20).

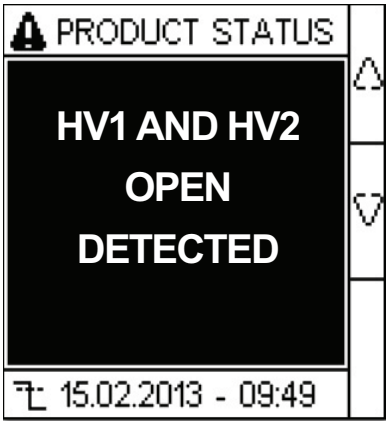


When the terminals HV1 and HV2 are not shorted and the **V. Adapt** parameter is set to **None**, the device displays the resistance of the ungrounded system.

# Parameter modification using the display

To modify the values, you must be thoroughly familiar with the interface menu structure and general navigation principles.

For more information about how the menus are structured, see Vigilohm IM400, IM400C, and IM400L menu, page 27 and Vigilohm IM400THR and IM400LTHR menu, page 28

To modify the value of a parameter, follow either of these two methods:

- Select an item (value plus unit) in a list.

- Modify a numerical value, digit by digit.

For the following parameters, the numerical value can be modified:

- Date
- Time
- Password
- Modbus address

## Selecting a value in a list

To select a value in a list, use the up and down menu buttons to scroll through the parameter values until you reach the desired value, then press to confirm the new parameter value.

## Modifying a numerical value

The numerical value of a parameter is made up of digits and the one on the far right is selected by default. To modify a numerical value, use the menu buttons as follows:

- to modify the selected digit.
- to select the digit to the left of the one that is currently selected, or to loop back to the digit on the right.
- to confirm the new parameter value.

## Saving a parameter

After you have confirmed the modified parameter, one of following two actions occur:

- If the parameter has been saved correctly, the screen displays **Saved** and then returns to the previous display.
- If the parameter has not been saved correctly, the screen displays **Error** and the editing screen remains active. A value is deemed to be out of range when it is classed as forbidden or when there are several interdependent parameters.

## Canceling an entry

To cancel the current parameter entry, press the **Esc** button. The previous screen is displayed.

# Function

## General configuration

### Date/Time

The date/time must be set:

- On first power up.
- Whenever the power supply is interrupted.
- When switching between summer and winter time and vice versa.

If the auxiliary power supply is interrupted, the device retains the date and time setting from immediately before the interruption. The device uses the date and time parameter to time-tag the system insulation faults recorded. The date is displayed in the format: dd/mm/yyyy. The time is displayed using the 24-hour clock in the format: hh/mm.

When the device is powered up, the clock icon flashes on the system monitoring screens to indicate that the clock needs to be set. To set the date and time, see Parameter modification using the display, page 35.

### Password

You can set a password to limit access to configuration of the device parameters to authorized personnel only.

When a password is set, the information displayed on the device can be viewed but the parameter values cannot be edited. By default, the password protection is not activated. The default password is **0000**. You can set a 4-digit password from **0000** to **9999**.

To activate the password, navigate to **Menu > Settings > Password > Activation** and select **ON**.

To modify the password, navigate to **Menu > Settings > Password > Modify Password** and edit the new password. To modify the parameter value, see Parameter modification using the display, page 35.

### Language

The device supports 8 languages for HMI display.

The list of languages supported by the device HMI are as follows:

- English (Default)
- French
- Spanish
- Russian
- Chinese
- Italian
- German
- Portuguese

To set the language, navigate to **Menu > Language**. To modify the parameter value, see Parameter modification using the display, page 35.

# Identification

You can view the information about the device on the **Identification** screen.

The **Identification** screen displays the following information:

- Model name
- Firmware version
- Firmware release date
- CRC App
- Serial number
- QR code

  **NOTE:** Scan the QR code to view the device webpage.

  - IM400
  - IM400C
  - IM400L
  - IM400THR
  - IM400LTHR

To view the **Identification** screen, navigate to **Menu > Identification**.

# Display

You can set the contrast and backlight and enable screen saver for the display.

You can access the device display parameters by selecting **Menu > Settings > Display**.

The display parameters and its allowed and default values are as follows:

| Parameter | Default value | Allowed values |
|---|---|---|
| **Contrast** | **50 %** | **10 %** to **100 %** |
| **Backlight** | **100 %** | **10 %** to **100 %** |
| **Screen Saver** | **OFF** | • **ON**<br>If you select this value, the display turns OFF after 5 minutes of inactivity. If you press any button or on any fault, the display turns ON.<br>• **OFF** |

To modify the parameter value, see Parameter modification using the display, page 35.

# Network configuration

You can configure the electrical network parameters to suit the electrical applications you want to monitor.

You can access the device network parameters by selecting **Menu > Settings > Network**.

The network parameters for IM400, IM400C, and IM400L are:

- **App**
- **Filtering**
- **Locating**
- **V.Adapt**

- **Frequency**
- **HRG**

The network parameters for IM400THR and IM400LTHR are:

- **App**
- **Filtering**
- **V.Adapt**
- **HRG**
- **Injection**
- **Pre. DC Resis.**
- **No. of Transfo.**

To modify the parameter value, see Parameter modification using the display, page 35.

## Application (App)

The device is designed and tested to be compliant with different applications, which can be monitored.

- Power circuits: industrial or marine applications that contain power loads and power electronics such as speed drives, inverters, or rectifiers.
- Control circuits: auxiliary control circuits used to drive power systems. These circuits contain sensitive loads such as PLCs, IOs, or sensors.
- M-RW-PV system: Mentioned are Marine, Railways and large Photovoltaic systems. This application is characterized by high DC rated voltage (up to 1500 V) and high system leakage capacitance (up to 5500 µF with IM400VA2 voltage adaptor, and up to 2000 µF with HV1700 voltage adaptor)
- Medium voltage system: Applications up to 33 kV with compatible Schneider Electric voltage transformer.

To optimize the measurement performance of the device according to the application, you can set the application parameter depending on the type of application on which the device is installed:

| Parameter Value | Applicable Models | Application |
|---|---|---|
| **Power C.** (Default) | • IM400<br>• IM400L<br>• IM400C | Power circuits |
| **Control C.** | • IM400<br>• IM400L<br>• IM400C | Control circuits |
| **M-RW-PV** [13] | IM400C | M-RW-PV system |
| **THR** [14] | • IM400THR<br>• IM400LTHR | Medium voltage system |

**NOTE:** For ,IM400THR and IM400LTHR, the **App** value is fixed to **THR**.

The following measurement parameters accessible in the **Network** menu are automatically preset depending on the **App** value:

- **Filtering**
- **Locating**
- **V. Adapt**
- **Frequency**
- **Injection** [14]

13. Applicable for IM400C
14. Applicable for IM400THR and IM400LTHR

There is no need to configure these parameters in typical conditions. The following table list the preset values of the measurement parameters according to the **App** value:

| **Preset Values** | **App value** | | | |
|---|---|---|---|---|
| | **Power C.** | **Control C.** | **M-RW-PV** | **THR** |
| **Filtering** | **40s** | **40s** | **40s** | **20s** |
| **Locating** | **OFF** | **OFF** | **OFF** | **-** |
| **V. Adapt** | **None** | **None** | **None** | **None** |
| **Frequency** | **50 Hz** | **DC** | **DC** | **-** |
| **Injection** [15] | **-** | **-** | **-** | **60V** |

# Filtering

You can set the filtering parameter as per the monitored application.

This parameter is used to smooth out values of insulation measures that always depend on equipment operating on the application. The criteria are:

- Number of loads
- Type of loads
- Size of the system (effects capacitance)
- Load switching

The device is designed to provide accurate insulation resistance and capacitance measurement on highly disturbed systems with power electronic devices.This features improves the measurement stability to avoid display fluctuation, undesired transient insulation alarm, and preventive insulation alarm. The response time associated with this filtering function does not affect the ungrounded power system. Three values are available for this parameter:

The following table is applicable for IM400, IM400C, and IM400L

| **Value** | **Response time required to detect an insulation fault (for C = 1 µF)** | **Advised Usage** | **Measurement refresh time** |
|---|---|---|---|
| **4s**[16] | 4 seconds | Use in maintenance mode.<br>Diagnose fast variation of the insulation resistance and leakage capacitance.<br>Use in the following cases:<br>• Detecting short time transient insulation faults.<br>• When manually locating insulation faults by opening circuit breakers. | 0.8 s |
| **40s** (Default) | 40 seconds | Use in operation mode.<br>To monitor insulation of typical installations. | 8 s |
| **400s** | 400 seconds | Use in operation mode.<br>To monitor insulation of highly disturbed installations and/or installations with high leakage capacitance. | 80 s |

15. Applicable for IM400THR and IM400LTHR
16. Not available in M-RW-PV application

**NOTE:**

When you use **IM400–1700C** voltage adaptor in Photovoltaic applications, the **Filtering** parameter can be set to **40s** or **400s**.

When you use **IM400VA2** voltage adaptor in Photovoltaic applications, the **Filtering** parameter can be set only to **400s**.

The following table is applicable for IM400THR and IM400LTHR:

| Value | Response time required to detect an insulation fault (for C = 1 µF) | Advised Usage | Measurement refresh time |
|---|---|---|---|
| **2s** | 2 seconds | Use in maintenance mode.<br>Diagnose fast variation of the insulation resistance and leakage capacitance.<br>Use in the following cases:<br>• Detecting short time transient insulation faults.<br>• When manually locating insulation faults by opening circuit breakers. | 0.4 s |
| **20s** (Default) | 20 seconds | Use in operation mode.<br>To monitor insulation of typical installations. | 4 s |
| **200s** | 200 seconds | Use in operation mode.<br>To monitor insulation of highly disturbed installations and/or installations with high leakage capacitance. | 40 s |

# Locating

Applicable for IM400, IM400C[17], and IM400L.

You can use the device with automatic insulation fault locator or manual insulation fault locator to locate the insulation fault.

You can use the following automatic insulation fault locators:

- IFL12: Twelve-channel insulation fault locator with one LED indicator per channel and one output relay (commercial reference: IMDIFL12)
- IFL12C: Twelve-channel insulation fault locator with LCD display ( indication for 12 channels) and one output relay (commercial reference: IMDIFL12C)
- IFL12MC: Twelve-channel insulation fault locator with LCD display (indication for 12 channels with R, C, and Zc display) and one output relay (commercial reference: IMDIFL12MC)
- IFL12LMC: Twelve-channel insulation fault locator with LCD display (indication for 12 channels with R, C, and Zc display), low voltage auxiliary supply, and one output relay (commercial reference: IMDIFL12MC)
- IFL12MCT: Twelve-channel insulation fault locator with LCD display (indication for 12 channels with R, C, and Zc display) and one output relay with conformal coating (commercial reference: IMDIFL12MCT)
- IFL12LMCT: Twelve-channel insulation fault locator with LCD display (indication for 12 channels with R, C, and Zc display), low voltage auxiliary supply, and one output relay with conformal coating (commercial reference: IMDIFL12LMCT)
- XD301: One-channel insulation fault locator with indicator light and one output relay (commercial references 50506, 50507, and 50508)

17. When you use IM400C in M-RW-PV mode with fault location, use IFL12MC or IFL12MCT.

- XD312: Twelve-channel insulation fault locator with one indicator light per channel and one output relay (commercial references 50535, 50536, and 50537)
- XD308C: Eight-channel insulation fault locator with communication (requires an XLI300 communication interface) (commercial references 50723, 50724, and 50725)

**NOTE:** You are strongly advised to use the following devices:

- IFL12
- IFL12C
- IFL12MC
- IFL12LMC
- IFL12MCT
- IFL12LMCT

You can use the XRM manual insulation fault locators.

Four values are available for this parameter:

| Value | Advised Usage |
|---|---|
| **OFF** | The device does not inject a fault locating current. |
| **IFL** | The device injects a fault locating current when an insulation alarm is detected and compatible with IFL12, IFL12MC, IFL12LMC, IFL12MCT, and IFL12LMCT devices. |
| **XD** | The device injects a fault locating current when an insulation alarm is detected and compatible with XD301, XD312, XD308C, and XRM devices. |

**NOTE:** Insulation fault location is not compatible with IM400-1700, IM4000VA2, and P1N voltage/ground adaptors.

## Voltage adaptor (V. Adapt)

You can use voltage adapter to monitor ungrounded power system with a rated voltage higher than 480 V AC/DC. IM400-1700 or IM4000VA2 voltage adaptor can also be used in ungrounded power systems below 480 V AC/DC to increase the internal impedance of the device. The IM400THR and IM400LTHR can be used with P1N ground adaptor and compatible Schneider Electric voltage transformer to monitor power systems with a rated voltage up to 33 kV.

The following three values are applicable for IM400 and IM400L

| Value | Advised Usage |
|---|---|
| **None** (Default) | Use when the monitored ungrounded power system rated voltage is ≤ 480 V AC/DC. |
| **PHT1000** | Use when the monitored ungrounded power system rated voltage is > 480 V AC/DC and ≤ 1500 V AC/DC.<br>**NOTE:** Locating an insulation fault can be done using the device with PHT1000. |
| **HV1700** | Use when the monitored ungrounded power system rated voltage is > 480 V AC/DC and ≤ 1500 V AC/DC.<br>**NOTE:** Locating an insulation fault can not be done using the device with IM400–1700. This value cannot be set up when the **Locating** parameter is set to **ON**. |

The following four values are applicable for IM400C:

| Value | Advised Usage |
|---|---|
| **None** (Default) | Use when the monitored ungrounded power system rated voltage is ≤ 480 V AC/DC. |
| **PHT1000** | Use when the monitored ungrounded power system rated voltage is > 480 V AC/DC and ≤ 1500 V AC/DC. |

| Value | Advised Usage |
|---|---|
| | **NOTE:** Locating an insulation fault can be done using the device with PHT1000. |
| **HV1700C** | Use when the monitored ungrounded power system rated voltage is > 480 V AC/DC and ≤ 1500 V AC/DC.<br>**NOTE:** Locating an insulation fault can not be done using the device with IM400–1700C. This value cannot be set up when the **Locating** parameter is set to **ON**. |
| **VA2** | Use when the monitored ungrounded power system rated voltage is > 480 V AC/DC and ≤ 1500 V AC/DC.<br>**NOTE:** Locating an insulation fault can not be done using the device with IM400VA2. This value cannot be set up when the **Locating** parameter is set to **ON**. |

The following two values are applicable for IM400THR and IM400LTHR:

| Value | Advised Usage |
|---|---|
| **None** (Default) | Use when the monitored ungrounded power system rated voltage is ≤ 480 V AC/DC. |
| **P1N** | Use when the monitored ungrounded power system rated voltage is up to 33 kV.<br>**NOTE:** Locating an insulation fault can not be done using the device with P1N. |

See Accessories, page 13 for more information on voltage adaptors.

## Frequency

Applicable for IM400, IM400C, and IM400L.

You can set the rated frequency of the monitored application.

Four values are available for this parameter:

- **50 Hz** (by default)
- **60 Hz**
- **400 Hz**
- **DC**

## Injection

Applicable for IM400THR and IM400LTHR.

You can set the level of measurement voltage and measurement current that are injected between the monitored power system and ground.

Four setting are available for this parameter:

| Value | Measurement current value |
|---|---|
| **20V** (Default) | < 0.469 mA DC |
| **40V** | < 0.94 mA DC |
| **60V** | < 1.56 mA DC |
| **80V** | < 2.48 mA DC |

## High Resistance Grounding (HRG)

You can use the device to monitor power systems with a grounding resistance inserted between the neutral and the earth.

The device compensates the measured insulation resistance with the value of the neutral grounding resistance. The device offset the value of the neutral grounding resistance to report the actual insulation resistance. Further, the actual insulation resistance ( derived after compensating the neutral grounding resistance) is compared against the insulation alarm threshold and the preventive alarm threshold to trigger the insulation and preventive insulation alarm relays.

This compensation is applicable only if the neutral is connected to ground through a resistance. This feature is not compatible with RLC (non -linear) grounding circuits.

Two setting are available for this parameter:

| Value | Description |
|---|---|
| **OFF** (Default) | The device does not compensate the reported insulation resistance with the value of the neutral grounding resistance. |
| **0.1...500 kΩ** | The device compensates the measured insulation resistance with the value of the neutral grounding resistance. |

## Primary DC Resistance (Pri. DC Resis)

This parameter is applicable for IM400THR and IM400LTHR and when **V.Adapt** parameter value is set to **P1N**.

This is the value of resistance of the compatible Schneider Electric voltage transformer primary winding.

You can select any value from **0** to **50** kΩ.

If you have connected more than one transformer, select the value of resistance of single transformer. The device automatically calculates the total resistance depending on the value of the number of transformer parameter.

## Number of Transformer (No. of Transfo)

This parameter is applicable for IM400THR and IM400LTHR and when **V.Adapt** parameter value is set to **P1N**.

This is the value of number of transformer connected.

Three settings are available for the **No. of Transfo** parameter:

- **0**
- **1**
- **3**

## Example to set Primary DC Resistance and Number of Transformer

| If | Then |
|---|---|
| You have connected 3 transformers and DC primary resistance of each transformer is 15 kΩ. | Select **15 kΩ** value for **Pri.DC Resis** parameter. Set **3** value for **No. of Transfo** parameter. |
| You have connected 1 transformer and DC primary resistance of transformer is 15 kΩ. | Select **15 kΩ** value for **Pri.Dc Resis** parameter. Set **1** value for **No. of Transfo** parameter. |

# Alarm configuration

You can configure the insulation alarm threshold and delay, preventive insulation alarm threshold and delay, and injection detection to suit to the electrical applications you want to monitor.

You can access the device alarm parameters by selecting **Menu > Settings > Ins. Alarm**.

The alarm parameters are:

- **Ins. Alarm**
- **Ins. Al. Delay**
- **Prev. Alarm**
- **Prev. Al. Del.**
- **Disconnect. Inj.**

To modify the parameter value, see Parameter modification using the display, page 35.

## Insulation alarm (Ins. Alarm) and preventive insulation alarm (Prev. Alarm) thresholds

You can set the insulation alarm and preventive insulation alarm threshold values as per the level of insulation of the application you monitor.

| Parameter | Allowed Values | Default Value |
|---|---|---|
| **Ins. Alarm** (Insulation alarm threshold) | **0.04...500 kΩ** | **1 kΩ** |
| **Prev. Alarm** (Preventive insulation alarm threshold) | • **1 kΩ...1 MΩ**<br>• **OFF** | **OFF** |

When the device is powered up, it retrieves the last preventive insulation alarm and insulation alarm threshold values recorded.

**NOTE:** The preventive insulation alarm threshold must always be higher than the insulation alarm threshold.

An insulation alarm is cleared when the insulation level reaches 20% above the threshold.

## Insulation alarm and preventive insulation alarm threshold hysteresis

A hysteresis is applied to limit the error in the insulation alarm due to fluctuations in the measurement when approaching threshold value.

A hysteresis principle is applied:

- When the insulation value measured decreases and falls below the setting threshold, the insulation alarm or preventive insulation alarm is triggered or the countdown is started if an insulation alarm time delay has been set.
- When the insulation value measured increases and exceeds 1.2 times the set threshold (i.e. the setting threshold +20%), the insulation alarm or the preventive insulation alarm is deactivated.

The following diagrams show the behaviors:

- Without hysteresis:

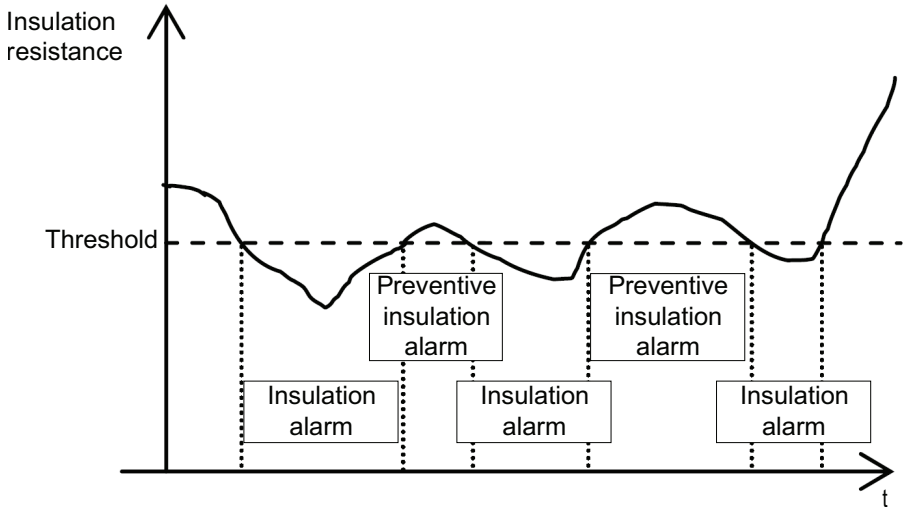


With hysteresis:

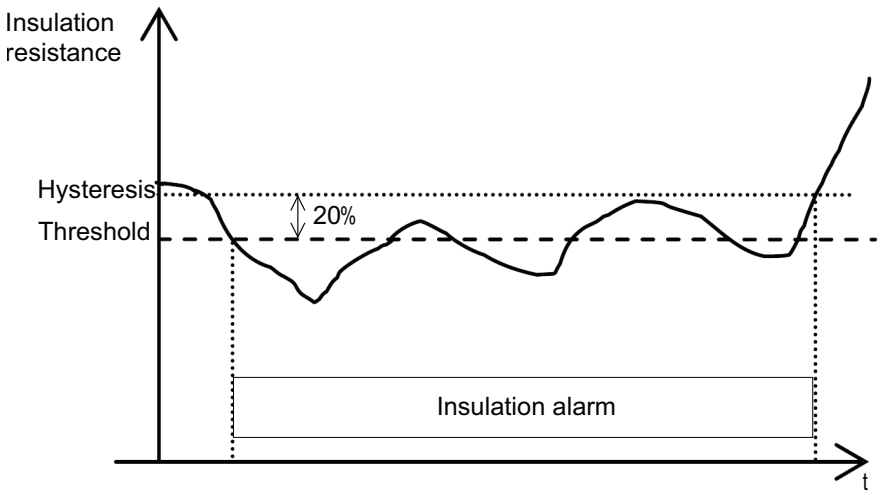


## Insulation alarm time delay (Ins. Al. Delay) and preventive insulation alarm time delay (Prev. Al. Del.)

In some applications you might want to delay the triggering of an alarm while certain machines are starting up, otherwise erroneous alarms could be triggered. You can set the threshold delay to filter these erroneous alarms.

The threshold delay is time filter. This delay can be used in harsh electrical systems to avoid false insulation alarms and preventive insulation alarms. The device does not report insulation fault that do not remain for a duration longer than the delay set up.

| Parameter | Allowed Values | Default Value |
|---|---|---|
| **Ins. Al. Delay** (Insulation alarm time delay) | **0 s...120 mn** | **0 s** |
| **Prev. Al. Del.** (Preventive insulation alarm time delay) | **0 s...120 mn** | **0 s** |

**NOTE:** The preventive insulation alarm time delay setup is not displayed when the preventive insulation alarm threshold value is set to **OFF**.

## Disconnected injection (Disconnect. Inj.)

You can detect the high insulation resistance in the system and can detect the disconnections.

The device detects a high insulation resistance in the system and can detect the following disconnections:

- Injection wire
- Ground wire
- Between the device and IM400-1700 voltage adaptor
- Between the device and PHT1000 voltage adaptor
- Between the device and IM400VA2 voltage adaptor

The allowed values for this parameter are **OFF** and **ON**. The default value is **OFF**.

**NOTE:**

On small networks without loads and transformer, where the insulation level is high, or during commissioning without loads and transformer, it is advised to set the parameter to **OFF**.

Detection of disconnection between the device and IM400-1700, PHT1000, or IM400VA2 voltage adaptors is always active and does not depend on the value of the parameter.

If the injection disconnects, the device displays **DISCONNECTED INJECTION DETECTED** and product status LED turns ON. See Special status screens, page 33 for device display.

# I/O configuration

You can configure the relay parameters to suit the type of relay output information and configure the injection.

You can access the device I/O parameters by selecting **Menu > Settings > I/O Config**.

The I/O parameters are:

- **Ins. Al. Relay**
- **Prev. Al. Rel**
- **Inhibit. Input**
- **Ack Inhibit**
- **Ack. Al. Relay**
- **Test w.Relays**
- **Inhibition Type**

To modify the parameter value, see Parameter modification using the display, page 35.

## Insulation alarm relay (Ins. Al. Relay)

You can set the insulation alarm relay mode depending on the status of insulation.

The allowed values for this parameter are **FS** and **Std.**. The default value is **FS**.

**NOTE:** The preventive insulation alarm relay activation and deactivation and insulation alarm relay activation and deactivation are based on the following default states as per the configured mode. The device allows assigning various state to either of the relays (Preventive insulation alarm relay and Insulation alarm relay). See Relay assignment, page 52.

When the insulation alarm relay is configured in failsafe (**FS**) mode:

- The insulation alarm relay is activated, that is, energized, in the following case:
  - No insulation fault is detected.
  - Transient fault is detected.
  - Insulation fault is detected and acknowledged (if **Menu > Settings > I/O Config > Ack. Al. Relay** is set to **ON**). (See Insulation alarm relay acknowledgement (**Ack Al. Relay**), page 60)
- The insulation alarm relay is deactivated, that is, de-energized, in the following cases:
  - First measurement
  - Insulation fault is detected.
  - Insulation fault is detected and acknowledged (if **Menu > Settings > I/O Config > Ack. Al. Relay** is set to **OFF**). (See Insulation alarm relay acknowledgement (**Ack Al. Relay**), page 60)
  - When you trigger an auto-test with relays, the relay toggles for 3 seconds. (See Test with relays (**Test w. Relays**), page 62)
  - Injection is inhibited (if **Menu > Settings > I/O Config > Ack Inhibit** is set to **ON**). (See Acknowledge inhibition (**Ack Inhibit.**), page 60)
  - The auxiliary power supply is lost.
  - Product error

    **NOTE:** Auto-test failure state is identified as product error.
  - System error

    **NOTE:**

    The following states are identified as system error:
    - Disconnected injection
    - Over voltage
    - Over capacitance

When the insulation alarm relay is configured in Standard (**Std**) mode:

- The insulation alarm relay is activated, that is, energized, in the following case:
  - Insulation fault is detected.
  - Insulation fault is detected and acknowledged (if **Menu > Settings > I/O Config > Ack. Al. Relay** is set to **OFF**). (See Insulation alarm relay acknowledgement (**Ack Al. Relay**), page 60)
  - When you trigger an auto-test with relays, the relay toggles for 3 seconds. (See Test with relays (**Test w. Relays**), page 62)
  - Injection is inhibited (if **Menu > Settings > I/O Config > Ack Inhibit** is set to **ON**) (See Acknowledge inhibition (**Ack Inhibit.**), page 60)
  - Product error

    **NOTE:** Auto-test failure state is identified as product error.
  - System error

    **NOTE:**

    The following states are identified as system error:
    - Disconnected injection
    - Over voltage
    - Over capacitance

- The insulation alarm relay is deactivated, that is, de-energized, in the following cases:
  - First measurement
  - No insulation fault is detected.
  - Insulation fault is detected and acknowledged (if **Menu > Settings > I/O Config > Ack. Al. Relay** is set to **ON**). (See Insulation alarm relay acknowledgement (**Ack Al. Relay**), page 60)
  - Transient fault is detected.
  - The auxiliary power supply is lost.

# Preventive insulation alarm relay (Prev. Al. Rel)

You can set the preventive insulation alarm relay mode depending on the status of insulation.

The allowed values for this parameter are **FS**, **Std.**, and **Mirror**. The default value is **FS**.

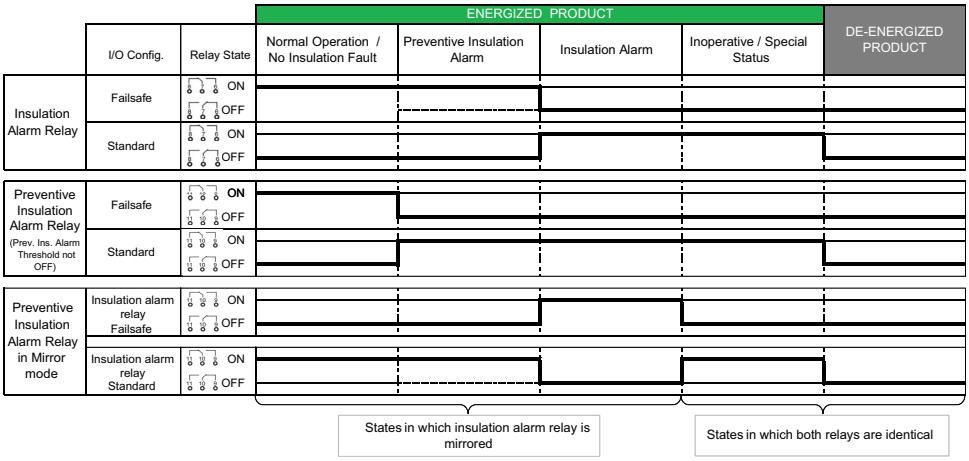


When the preventive insulation alarm relay is configured in failsafe (**FS**) mode:

- The preventive insulation alarm relay is activated, that is, energized, in the following case:
  - No insulation fault is detected.
  - No preventive insulation fault is detected.
  - Transient fault is detected.
  - Insulation fault is detected and acknowledged (if **Menu > Settings > I/O Config. > Ack. Al. Relay** is set to **ON**). (See Insulation alarm relay acknowledgement (**Ack Al. Relay**), page 60)
  - Injection is inhibited (if **Menu > Settings > I/O Config. > Ack Inhibit** is set to **ON**). (See Acknowledge inhibition (**Ack Inhibit.**), page 60)

- The preventive insulation alarm relay is deactivated, that is, de-energized, in the following cases:
  - First measurement
  - Preventive insulation fault is detected.
  - Insulation fault is detected.
  - Insulation fault is detected and acknowledged (if **Menu > Settings > I/O Config. > Ack. Al. Relay** is set to **OFF**). (See Insulation alarm relay acknowledgement (**Ack Al. Relay**), page 60)
  - When you trigger an auto-test with relays, the relay toggles for 3 seconds. (See Test with relays (**Test w. Relays**), page 62)
  - The auxiliary power supply is lost.
  - Product error

    **NOTE:** Auto-test failure state is identified as product error.
  - System error

    **NOTE:**

    The following states are identified as system error:
    - Disconnected injection
    - Over voltage
    - Over capacitance

When the preventive insulation alarm relay is configured in Standard (**Std**) mode:

- The preventive insulation alarm relay is activated, that is, energized, in the following case:
  - Preventive insulation fault is detected.
  - Insulation fault is detected.
  - When you trigger a auto-test with relays, the relay toggles for 3 seconds. (See Test with relays (**Test w. Relays**), page 62)
  - Product error

    **NOTE:** Auto-test failure state is identified as product error.
  - System error

    **NOTE:**

    The following states are identified as system error:
    - Disconnected injection
    - Over voltage
    - Over capacitance
- The preventive insulation alarm relay is deactivated, that is, de-energized, in the following cases:
  - First measurement
  - No insulation fault is detected.
  - Insulation fault is detected and acknowledged (if **Menu > Settings > I/O Config. > Ack. Al. Relay** is set to **ON**). (See Insulation alarm relay acknowledgement (**Ack Al. Relay**), page 60)
  - No preventive insulation fault is detected.
  - Transient fault is detected.
  - Injection is inhibited (if **Menu > Settings > I/O Config. > Ack Inhibit** is set to **ON**) (See Acknowledge inhibition (**Ack Inhibit.**), page 60)
  - The auxiliary power supply is lost.

When the preventive insulation alarm relay is configured in mirror (**Mirror**) mode:

- The preventive insulation alarm relay mirrors (symmetrically matches) the insulation alarm relay as long as the device is operating correctly.

- The preventive insulation alarm relay stops mirroring the insulation alarms when the device is de-energized or inoperative. You can identify an inoperative product using this feature.

## Examples of application of preventive alarm relay mirroring modes

When the device is inoperative, the system should automatically switch to another device by managing exclusions using the injection inhibition input. See Injection inhibition input (**Inhibit. Input**), page 54 for more information on injection inhibition input.

Set the preventive insulation alarm relay to mirror mode and wire the relays in series to create a logical AND function. It is advised to configure the insulation alarm relay in failsafe mode and wire both relays in (NC/C). In this case, the logical function returns true only when the device is inoperative or de-energized, or when a special status is active.

The following wiring diagram is an example of the device wired in standard mode:

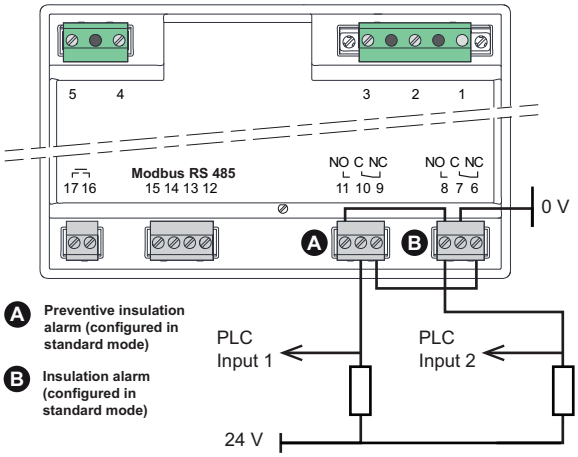


| Mode | Input | State | | | | |
|---|---|---|---|---|---|---|
| | | No fault | Preventive alarm | Alarm | Inoperative product | No power |
| Standard | PLC 1 | 1 | 1 | 1 | 0 | 0 |
| Standard | PLC 2 | 1 | 1 | 0 | 0 | 1 |

The following wiring diagram is an example of the device wired in failsafe mode:

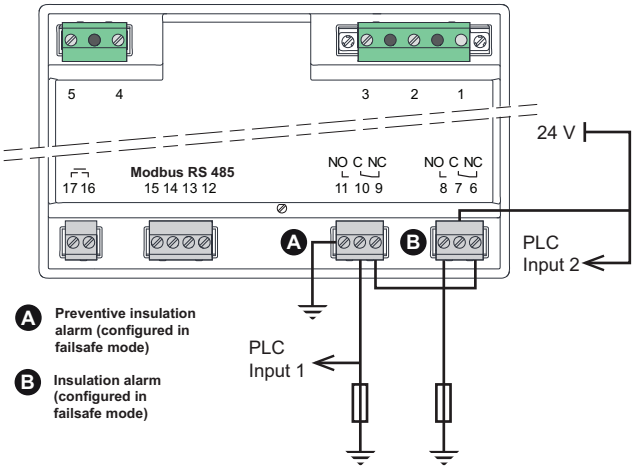

| Mode | Input | State | | | | |
|---|---|---|---|---|---|---|
| | | No fault | Preventive alarm | Alarm | Inoperative product | No power |
| Failsafe | PLC 1 | 0 | 0 | 0 | 1 | 1 |
| Failsafe | PLC 2 | 0 | 0 | 1 | 1 | 1 |

**ALARM=(RelayState:ON) || ((StatusInput:CLOSED) & (RelayState:OFF))**

- An insulation alarm is detected when both PLC inputs are at a logic 1.
- A product failure is detected when PLC input 1 is a logic 0.

# Relay assignment

The device allows assigning various states to either of the relays (Preventive insulation alarm relay (**PREV. AL. REL**) and Insulation alarm relay (**INS. AL. RELAY**)). These assignments can only be done through Modbus communication. The assigned states can be viewed on the HMI in **Monitoring** screen. Refer Vigilohm IM400, IM400C, and IM400L menu, page 27 and Vigilohm IM400THR and IM400LTHR menu, page 28.

The various states that can be assigned are:

- Preventive insulation alarm (**Pre.Alarm**)
- Insulation alarm (**Alarm**)
- Injection inhibit (**Inj. Inhibition**)
- System error (**System Error**)

  **NOTE:**

  The following states are identified as system error:

  - Disconnected injection
  - Over voltage
  - Over capacitance
- Product error (**Product Error**)

  **NOTE:** Auto-test failure state is identified as product error.

Two registers are defined for this assignment. Refer Modbus registers table, page 71 for details on the registers.

- Insulation alarm relay bitmap (Register Address: 3044)
- Preventive insulation alarm relay bitmap (Register Address: 3046)

For the assignment of states to each relay, use the bit configuration of these register as follows:

| Bit | Assignment |
|---|---|
| 0 | Preventive insulation alarm<br>**NOTE:** This bit is read-only for the preventive insulation alarm relay bitmap register (3046). |
| 1 | Reserved |
| 2 | Reserved |
| 3 | Reserved |
| 4 | Insulation alarm<br>**NOTE:** This bit is read-only for the insulation alarm relay bitmap register (3044). |
| 5 | Reserved |
| 6 | Reserved |
| 7 | Reserved |
| 8 | Injection inhibit |

| Bit | Assignment |
|---|---|
| 9 | Reserved |
| 10 | Reserved |
| 11 | Reserved |
| 12 | Reserved |
| 13 | Reserved |
| 14 | Reserved |
| 15 | Reserved |
| 16 | System error |
| 17 | Reserved |
| 18 | Reserved |
| 19 | Reserved |
| 20 | Reserved |
| 21 | Reserved |
| 22 | Reserved |
| 23 | Reserved |
| 24 | Product error |
| 25 | Reserved |
| 26 | Reserved |
| 27 | Reserved |
| 28 | Reserved |
| 29 | Reserved |
| 30 | Reserved |
| 31 | Reserved |

**NOTE:**

- After factory reset,
  - insulation alarm relay bitmap is assigned with insulation alarm, product error, and system error bits.
  - preventive insulation alarm relay bitmap is assigned with product error and system error bits, because the **Prev. Alarm** parameter is set to **OFF**.

  See Reset, page 66 for more information on factory reset.
- When the **Prev. Alarm** parameter is set to any value other than **OFF**, the preventive insulation alarm relay bit is assigned in the Preventive insulation alarm relay bitmap. You can also assign the preventive insulation alarm relay bit in the insulation alarm relay bitmap.

  See Insulation alarm and preventive insulation alarm threshold hysteresis, page 45 for more information on **Prev. Alarm** parameter.
- When the **Prev. Al. Rel** parameter is set to **Mirror**, the preventive insulation alarm relay bitmap is cleared to mirror the insulation alarm operation and you can not assign any bits in the preventive insulation alarm relay bitmap. You can assign bits when the **Prev. Al. Rel** parameter is set to **Standard** or **Failsafe**.

  See Preventive insulation alarm relay (**Prev. Al. Rel**), page 49 for more information on **Prev. Al. Rel** parameter.
- When the **Ack Inhibit** parameter is set to **OFF**, the injection inhibit bit is cleared in insulation alarm relay and preventive insulation alarm relay bitmaps and you can not assign any bits in both the bitmaps. When the **Ack Inhibit** parameter is set to **ON**, the injection inhibit bit is assigned in the Insulation alarm relay bitmap. To assign the injection inhibit bit in preventive insulation alarm bitmap only, assign the bit in preventive insulation alarm bitmap and reset the bit in the insulation alarm bitmap.

  See Acknowledge inhibition (**Ack Inhibit.**), page 60 for more information on **Ack Inhibit** parameter.

## Injection inhibition input (Inhibit. Input)

The device injects several patented combinations of low frequency voltage into the system. In a system with several incoming feeders, depending on the circuit breaker position, there must be no more than one device injecting into the system. The inhibition of injection is managed by the state of inhibition input of the device, which can, for example, be connected to the auxiliary contacts of the circuit breakers.

You can configure the injection inhibition input to use an NO or an NC contact as follows:

| Value or Contact type | Injection activated when the contact is... | Injection deactivated when the contact is... |
|---|---|---|
| **NO** (Default) | Open | Closed |
| **NC** | Closed | Open |
| **OFF** | Ignored | Ignored |

You can set this parameter value to **OFF**. In this mode, the electrical input state is ignored and the exclusion management can still be done over Modbus communication. See Modbus functions, page 70 for Modbus functions. This is especially useful in functional safety standards compliant environments. See Safety standards compliance requirements, page 90 for more information on functional safety standards compliance.

## Example: injection exclusion with two incoming feeders

You can use injection exclusion to monitor two incoming feeders.

Use of circuit breakers with normally open (NO) auxiliary contacts:

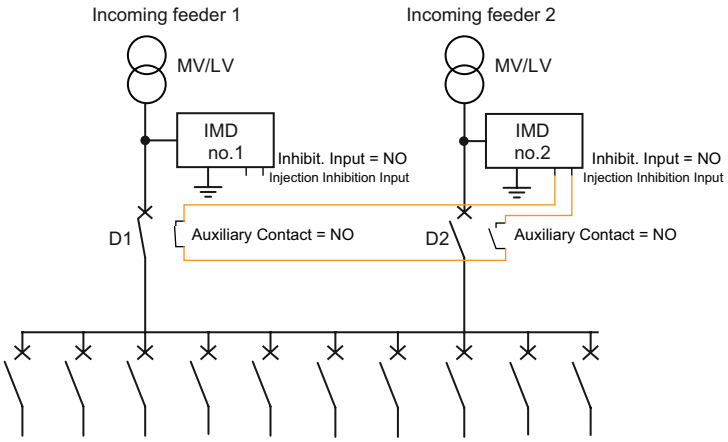


Use of circuit breakers with normally closed (NC) auxiliary contacts:

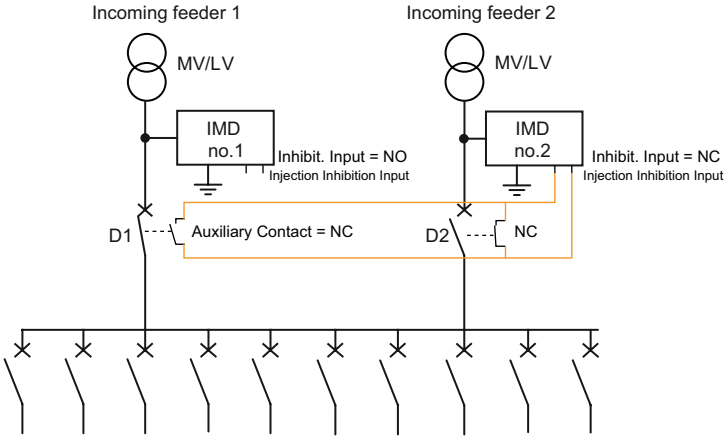


| If | Then |
|---|---|
| • D1 is closed and<br>• D2 is open | Both devices are active:<br>• Device No. 1 monitors the insulation of the system,<br>• Device No. 2 only monitors the insulation of transformer 2 connection as far as D2. |
| • D1 is open and<br>• D2 is closed | Both devices are active:<br>• Device No. 1 monitors the insulation of the transformer 1 connection as far as D1.<br>• Device No. 2 monitors the insulation of the system. |
| • D1 is closed and<br>• D2 is closed | • Device No. 1 monitors the insulation of the system.<br>• Device No. 2 must be inhibited. |

## Example: injection exclusion with two incoming feeders and one coupling

You can use exclusion injection and a coupling to monitor two incoming feeders.

Use of circuit breakers with normally open (NO) auxiliary contacts:

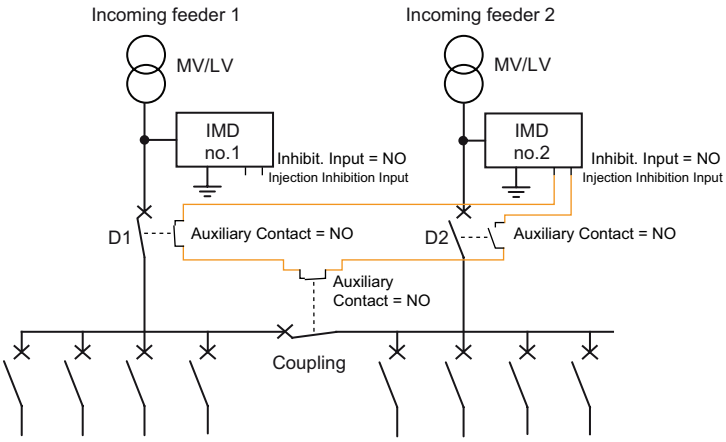


Use of circuit breakers with normally closed (NC) auxiliary contacts:

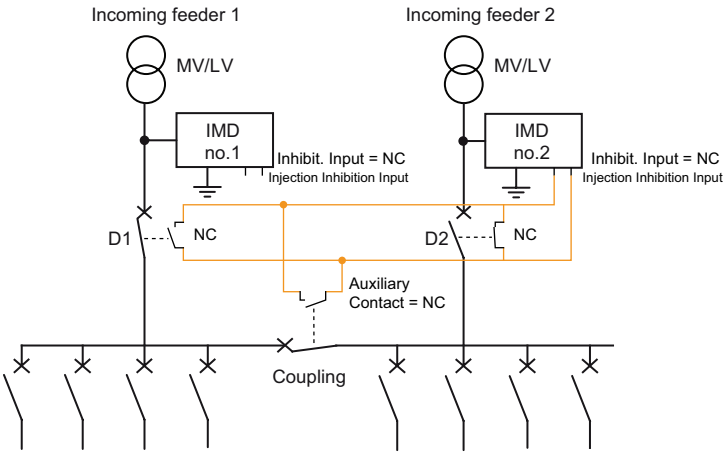


| If | Then |
|---|---|
| The coupling is closed | The same applies as in the example for injection exclusion with two incoming feeders. See Example: injection exclusion with two incoming feeders, page 55 for example of injection exclusion with two incoming feeders. |
| The coupling is open:<br>• D1 is closed AND<br>• D2 is closed | Both devices are active:<br>• Device no.1 monitors the insulation of system 1,<br>• Device no.2 monitors the insulation of system 2. |

Device no.2 must be inhibited when the following three conditions are met:

- D1 is closed
- D2 is closed
- Coupling is closed

## Example: injection exclusion with three incoming feeders

You can use injection exclusion to monitor three incoming feeders.

Use of circuit breakers with normally open (NO) auxiliary contacts:

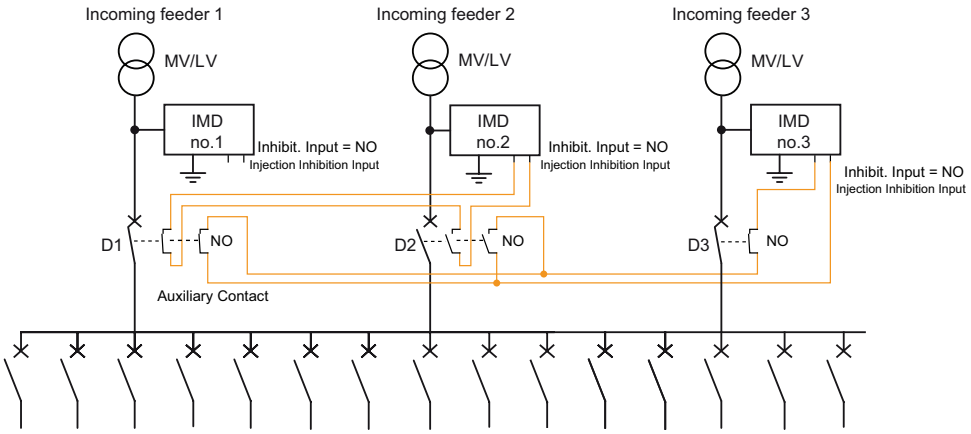


Use of circuit breakers with normally closed (NC) auxiliary contacts:

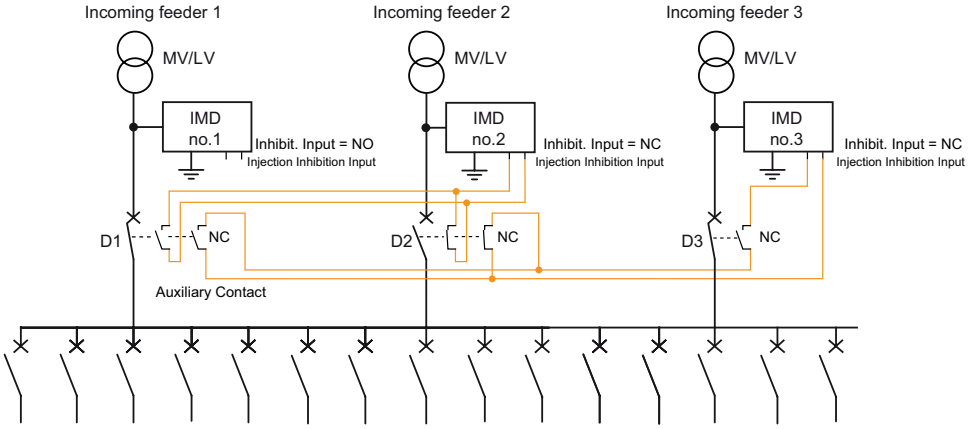


The device priority is as follows:

- Device no.1 is the device with the highest priority 1: it always injects into the system if D1 is closed or open.
- Device no.2 is the device with priority 2: it always injects into the system except when there is a closed path between the device and one device with a higher priority, in this case device no.1. Therefore, device no.2 is inhibited when D2 and D1 are closed.

  Device no.2 injection inhibition = D1<AND> D2

  To implement this logic, wire the injection inhibition of device no.2 to the 2 auxiliary contacts of D1 and D2.
- Device no.3 is the device with priority 3: it always injects into the system except when there is a closed path between the device and one device with a higher priority, in this case device no.1 or device no.2. Therefore, device no.2 is inhibited when D3 and D2 are closed, or D3 and D1 are closed.

  Device no.3 injection inhibition = (D3 <AND> D1) <OR> (D3 <AND> D2) = D3 <AND> (D1 <OR> D2)

  To implement this logic, wire the injection inhibition of device no.3 to the auxiliary contacts of D1, D2 and D3.

## Example: injection exclusion with multiple interconnected incoming feeders

By using a PLC, the wiring can be simplified and complex configurations can be considered.

The PLC can have the following characteristics:

- Number of digital inputs: is the number of circuit breakers for incoming feeder and for coupling. These inputs can be self-powered by the PLC or powered by an external power supply.

- Number of digital outputs: is the number of devices minus 1. These digital outputs can be electromechanical or solid-state outputs.
- Processing cycle is equal to 0.1 s or less.

Using a basic PLC to manage device exclusion allows to:

- Monitor continuously each part of ungrounded power system.
- Have a short response time to detect insulation faults.
- Be compatible with complex power systems with high number of incoming feeders and couplings.

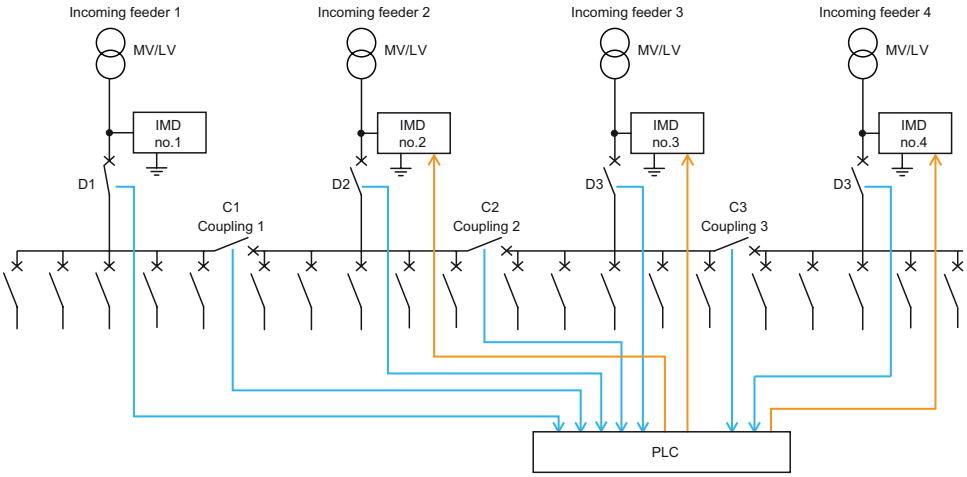


There are two methods to determine the logic driving the injection inhibition input of each device:

**Method 1:** Give a priority to each device using indexes of incoming feeders. In this example:

- Priority of device no.1 is 1 (highest priority)

  This device is always injecting, its injection inhibition input is left unwired.

- Priority of device no.2 is 2

  This device is always injects into the system except when there is a closed path between itself and one device with a higher priority, that is, device no.1 in this case. The closed path occurs when D2, C1 and D1 are closed.

  Therefore, Injection inhibition of device no.2 = D2 <AND> C1 <AND> D1

  The representation in Ladder PLC programming language is as follows:

- Priority of device no.3 is 3

  This device is always injects into the system except when there is a closed path between itself and one device with a higher priority, that is, device no.2 and device no.1 in this case. The closed path occurs when:

  - (D3, C2, and D2) are closed, or
  - (D3, C2, C1, and D1) are closed.

  Therefore,

  - Injection inhibition of device no.3 = (D3 <AND> C2 <AND> D2) <OR> (D3 <AND> C2 <AND> C1 <AND> D1)
  - Injection inhibition of device no.3 = (D3 <AND> C2) <AND> (D2 <OR> (C1 <AND> D1))

  The representation in Ladder PLC programming language is as follows:

- Priority of device no.4 is 4(lowest priority)

  This device is always injects into the system except when there is a closed path between itself and one device with a higher priority, that is, device no.3, device no.2, and device no.1 in this case. The closed path occurs when:

  - (D4, C3, and D3) are closed, or
  - (D4, C3, C2, and D2) are closed, or
  - (D4, C3, C2, C1, and D1) are closed.

  Therefore,

  - Injection inhibition of device no.4 = (D4 <AND> C3 <AND> D3) <OR> (D4 <AND> C3 <AND> C2 <AND> D2) OR (D4 <AND> C3 <AND> C2 <AND> C1 <AND> D1)
  - Injection inhibition of device no.3 = (D4 <AND> C3) <AND> (D3 <OR> (C2 <AND> D2) <OR> (C2 <AND> C1 <AND> D1))

  The representation in Ladder PLC programming language is as follows:

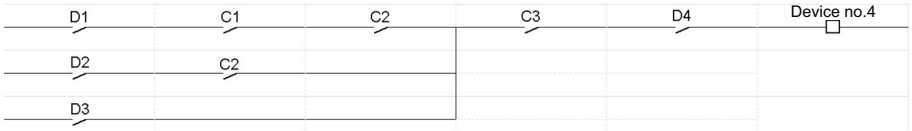


**Method 2:** Use a truth table.

| **Possible configurations**<br>**0 = open, 1 = closed** | | | | | | | **Injection Inhibition**<br>**0 = injection, 1 = injection inhibited** | | | |
|---|---|---|---|---|---|---|---|---|---|---|
| **D1** | **D2** | **D3** | **D4** | **C1** | **C2** | **C3** | **Device no.1** | **Device no.2** | **Device no.3** | **Device no.4** |
| 0 | 0 | 0 | 0 | 0 | 0 | 0 | 0 [18] | 0 [18] | 0 [18] | 0 [18] |
| 0 | 0 | 0 | 0 | 0 | 0 | 1 | 0 [18] | 0 [18] | 0 [18] | 0 [18] |
| ... | | | | | | | | | | |
| 0 | 1 | 1 | 1 | 1 | 0 | 1 | 0 [18] | 0 [19] | 0 [19] | 1 [20] |
| ... | | | | | | | | | | |
| 1 | 1 | 1 | 1 | 0 | 0 | 0 | 0 [19] | 0 [19] | 0 [19] | 0 [19] |
| ... | | | | | | | | | | |
| 1 | 1 | 1 | 1 | 1 | 1 | 1 | 0 [19] | 1 [20] | 1 [20] | 1 [20] |

## Injection inhibition screen

When the injection inhibition function is activated (that is, **Inhibit. Input** is set to **N. O.**), the following status screen displays and replaces any system status screen that may be displaying already (insulation measurement, insulation alarm or preventive insulation alarm).

18. Device monitors the transformer
19. Device injects a signal into the system
20. Device is excluded from the system (injection inhibited)

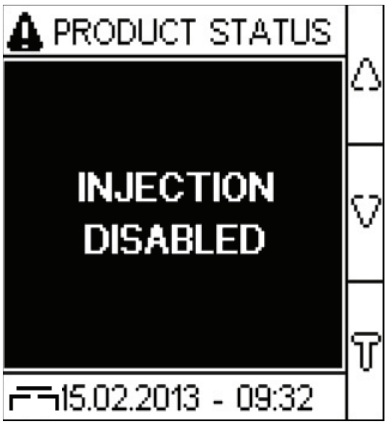


You can perform the following actions on this screen:

- Press the **Menu** button to go to the main menu.
- Press the arrow buttons to view the settings screen.
- Press the **T** button to run the auto-test.

**NOTE:**

If you activate the injection of the device,

- If **Inhibition Type** value is **Int.**, then an auto test is launched automatically before returning to the default insulation monitoring screen.
- If **Inhibition Type** value is **Ext.**, then the device displays the default insulation monitoring screen.

## Acknowledge inhibition (Ack Inhibit.)

You can configure the injection inhibition input to activate the insulation alarm relay when the injection is disabled. This is critical in an UL-FS type environment to obtain a feedback (acknowledgment) on the injection status.

The allowed values for this parameter are **ON** and **OFF**. The default value is **OFF**.

To set the acknowledgement of the inhibition signal ON , select **Menu > Settings > I/O Config > Ack Inhibbit > ON**.

To set the acknowledgement of the inhibition signal OFF , select **Menu > Settings > I/O Config > Ack Inhibbit > OFF**.

## Insulation alarm relay acknowledgement (Ack Al. Relay)

You can set the insulation alarm relay acknowledgment as per the usage of loads connected to the relay.

When the relays are connected to loads (for example, horns or lamps), it is advised to turn off these external signaling devices before the insulation level rises back to a level above the setup thresholds. This can be done by pressing the acknowledge button while in insulation alarm state.

In certain system configurations, it is required to prevent this type acknowledgement and only retrigger the relays when the insulation level rises above the setup thresholds. This is done by changing the corresponding parameter.

The allowed values for this parameter are **ON** and **OFF**. The default value is **ON**.

To set the acknowledge alarm relay ON, select **Menu > Settings > I/O Config > Ack Al. Relay > ON**.

To set the acknowledge alarm relay OFF, select **Menu > Settings > I/O Config > Ack Al. Relay > OFF**.

The device monitors the ungrounded power system insulation in accordance with the following timing diagram:

### Acknowledge alarm relay ON

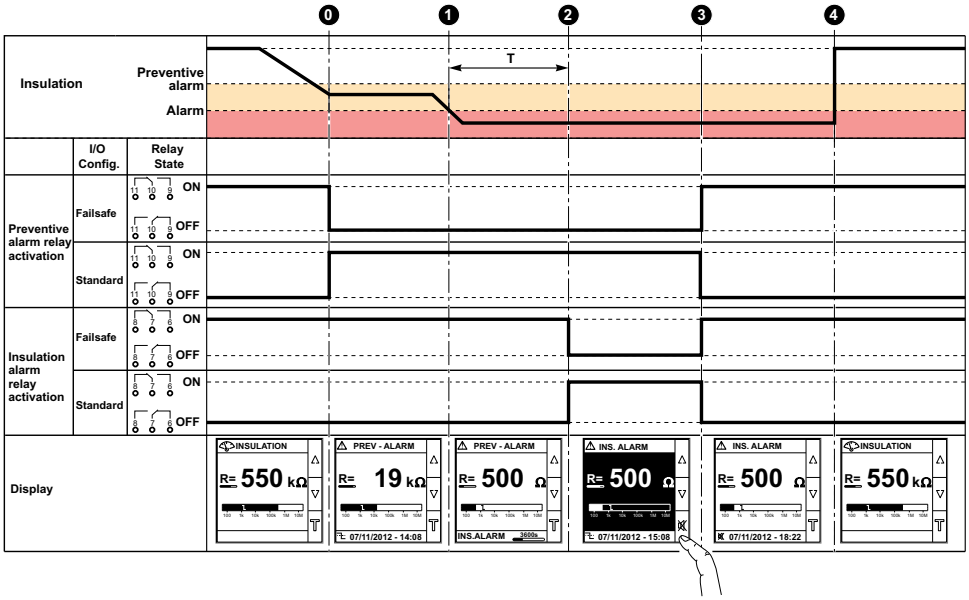


| | |
|---|---|
| 0 | An insulation decrease is detected on the system. The insulation resistance drops below the preventive insulation alarm threshold. The preventive insulation alarm relay switches and the preventive insulation alarm indicator light lights up. |
| 1 | An insulation fault is detected on the system. |
| 2 | Once T (insulation alarm delay) has elapsed, the device switches to the insulation alarm state. The insulation alarm relay switches and the insulation alarm indicator LED turns ON. |
| 3 | Press the button to acknowledge the insulation alarm. Both the insulation alarm relay and the preventive insulation alarm relay revert back to their initial state. |
| 4 | The insulation fault is corrected. The alarm LED turns off. The device reverts to normal status. |

### Acknowledge alarm relay OFF

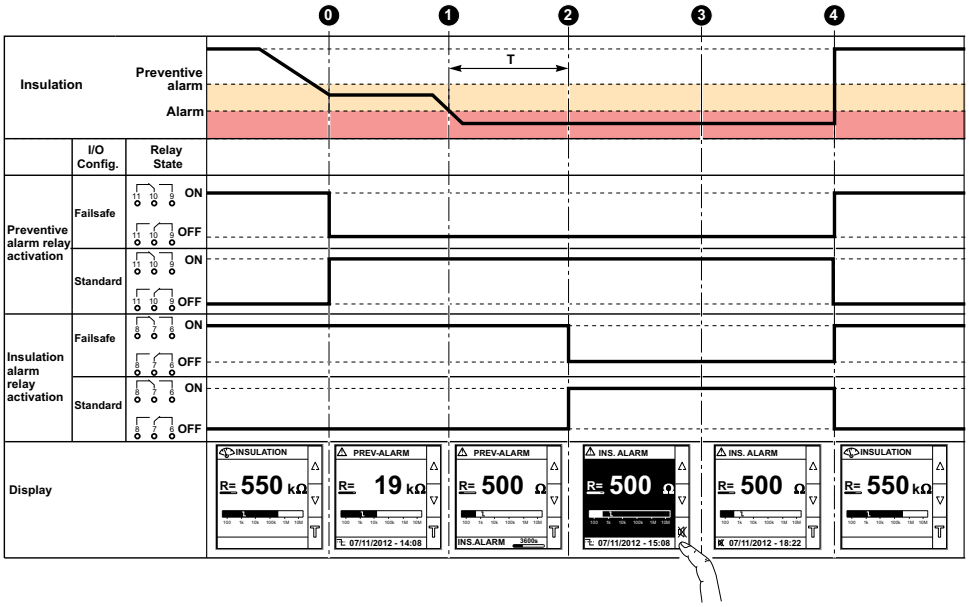


| | |
|---|---|
| 0 | An insulation decrease is detected on the system. The insulation resistance drops below the preventive insulation alarm threshold. The preventive insulation alarm relay switches and the preventive insulation alarm indicator light lights up. |
| 1 | An insulation fault is detected on the system. |
| 2 | Once T (insulation alarm delay) has elapsed, the device switches to the insulation alarm state. The insulation alarm relay switches and the insulation alarm indicator LED turns ON. |

| | |
|---|---|
| 3 | Press the button to acknowledge the insulation alarm. Both the insulation alarm relay and the preventive insulation alarm relay does not revert back to their initial state. |
| 4 | The insulation fault is corrected. The alarm LED turns off. The device reverts to normal status. |

## Test with relays (Test w. Relays)

You can set a three-second toggle to the preventive insulation alarm relay and insulation alarm relay during a manually launched auto test. See Auto test overview, page 68 for information on auto test.

The allowed values for this parameter are **ON** and **OFF**. The default value is **ON**.

## Inhibition type (Inhibit. Type)

You can configure the inhibition type depending on the ungrounded system with several incoming feeders.

Two values are available for this parameter:

| Value | Description |
|---|---|
| **Int.** (Default) | During inhibition state, the device relay is disconnected from external network. When injection is enabled, an auto test is launched automatically before returning to the default insulation monitoring screen. |
| **Ext.** | During inhibition state, the device relay is connected to the external network. When injection is enabled, the device displays the default insulation monitoring screen.<br>**NOTE:** The auto test is not launched. |

# R and C measurements

## Insulation measurements

The device monitors the insulation of ungrounded power system.

The device (IM400, IM400C, and IM400L) :

- measures and displays:
  - the insulation resistance R (Ω) continuously,
  - the insulation capacitance C, which is the leakage capacitance of the distribution system to ground (µF),
- calculates and displays the impedance Zc (kΩ) associated with C.

The device (IM400THR and IM400LTHR) measures and displays the insulation resistance R (Ω) continuously.

To view these values, navigate to **Menu > Monitoring**.

## Effect of leakage capacitance and frequency disturbances on the measurement accuracy of R

The leakage capacitance (C) creates a leakage path for the measurement signal and reduces the level of the useful signal that flows through the insulation resistance (R).

IMD injects an adaptive multi-frequency measurement signal with low frequencies and includes high-performance integration algorithms. It makes the device compatible with large power systems that have a high value of leakage capacitance and this operates out of the frequency disturbance range. So, the device operates correctly even with impact of leakage capacitance and frequency disturbances.

For other devices using switching mode measurement signals, the leakage capacitance (C) has an impact on the measurement accuracy of the insulation resistance (R).

The device operates in:

- power systems with leakage capacitance up to 500 µF
- photovoltaic systems with leakage capacitance up to 5500 µF with IM400VA2 voltage adaptor and 2000 µF with IM400-1700 voltage adaptor

# Monitoring Power system insulation

The device monitors the ungrounded power system insulation in resistance in accordance with the following timing diagram which represents the default settings:

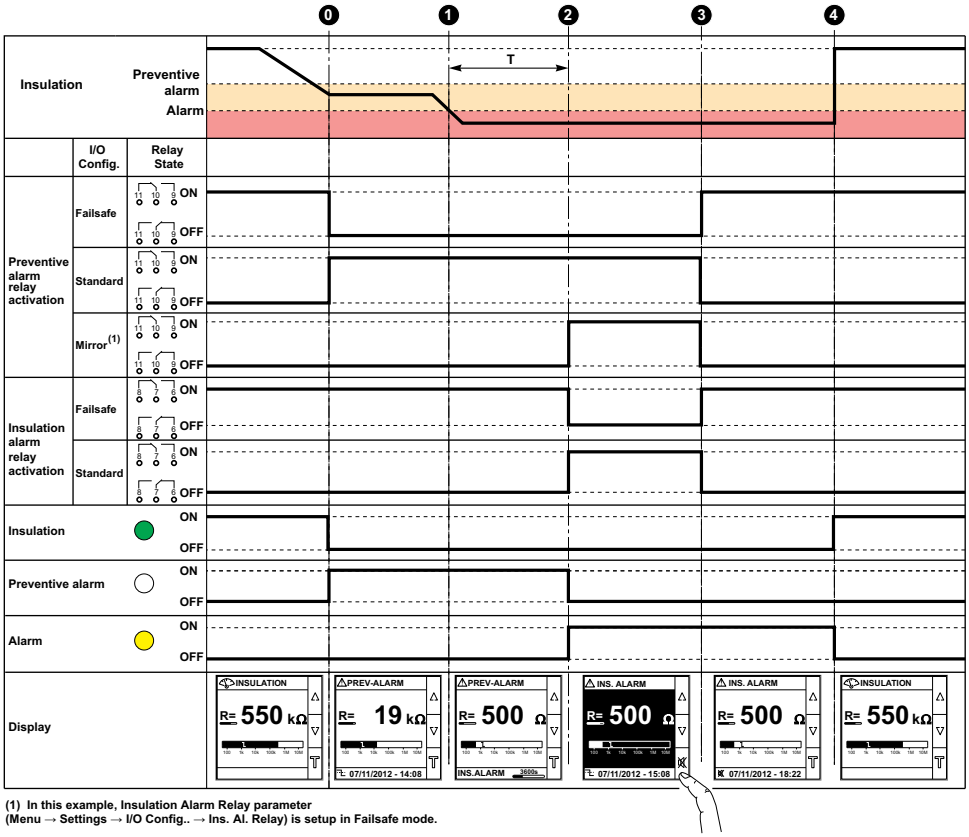


(1) In this example, Insulation Alarm Relay parameter (Menu → Settings → I/O Config.. → Ins. Al. Relay) is setup in Failsafe mode.

| | |
|---|---|
| 0 | An insulation decrease is detected on the system. The insulation resistance drops below the preventive insulation alarm threshold. The preventive insulation alarm relay switches and the preventive insulation alarm indicator light lights up. |
| 1 | An insulation fault is detected on the system. |
| 2 | Once T (insulation alarm delay) has elapsed, the device switches to the insulation alarm state. The insulation alarm relay switches and the insulation alarm indicator LED turns ON. |

| | |
|---|---|
| 3 | Press the button to acknowledge the insulation alarm. Both the insulation alarm relay and the preventive insulation alarm relay revert back to their initial state. Depending on the setup of the I/Os, the preventive insulation alarm relay and the insulation alarm relay may or may not revert back to their initial states. The timing diagram represents the case when the I/Os are set up to acknowledge the relays. See Relay Mode, page 47 for more information on relay modes. See Relay Acknowledgement, page 60 for more information on relay acknowledgement. |
| 4 | The insulation fault is corrected. The alarm LED turns off. The device reverts to normal status. |

**NOTE:** If you don't acknowledge the insulation alarm state, and the insulation rises again above the insulation alarm threshold, then the insulation fault is recorded as transient.

# Log

The device records the details of the 30 most recent insulation fault events. The fault events are triggered by one of following statuses:

- insulation fault
- preventive insulation fault

Event 1 is the event that was recorded most recently and event 30 is the oldest recorded event.

The oldest event is deleted when a new event occurs (the table is not reset).

By referring to this information, the performance of the distribution system can be improved and maintenance work is facilitated.

## Insulation fault log display screen

You can the view the details of an insulation fault event by navigating to **Menu > Logging**.

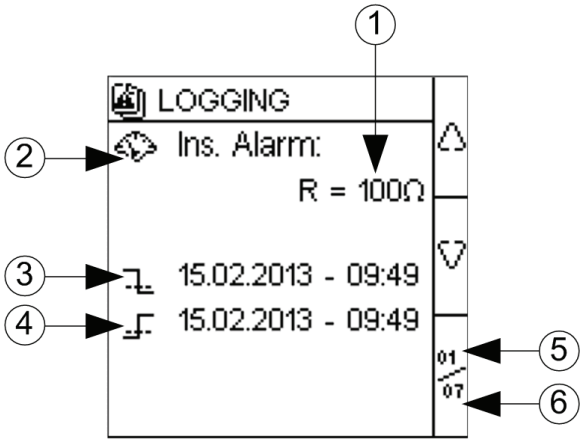


| | |
|---|---|
| 1 | Insulation fault value recorded |
| 2 | Type of fault recorded:<br>• insulation fault<br>• preventive insulation fault<br>**NOTE:** These faults are recorded as primary record. |
| 3 | Date and time when the fault appeared<br>**NOTE:** This information is stored as primary record. |
| 4 | Date and time when the fault disappeared due to any one of the following event:<br>• Insulation fault acknowledgement<br>• Disappearance of the preventive insulation fault or transient insulation fault |

| | |
|---|---|
| | • Power failure while on active alarm.<br>• Product error while on active alarm.<br>• Injection disable<br>• Over capacitance<br>• Over voltage<br>**NOTE:** This information is stored as secondary record. |
| 5 | Number of the event displayed |
| 6 | Total number of events recorded |

Use the up and down arrows to scroll through the events.

# Trends

The device records and displays the average of the system insulation in form of curves. The device displays curves as per the following durations:

- last hour (1 point every 2 minutes)
- last day (1 point per hour)

The chart scale automatically adjusts to the shown data to optimize the display accuracy.

The curves show a general trend how the system insulation evolves over time. They are calculated from averages related to shorter or longer durations depending on the charts. So charts may not show transient insulation faults when they are smoothed over time.

# Trend screen

You can view the trends by navigating to **Menu > Trend**.

An example of Last Day trend page is as follows:

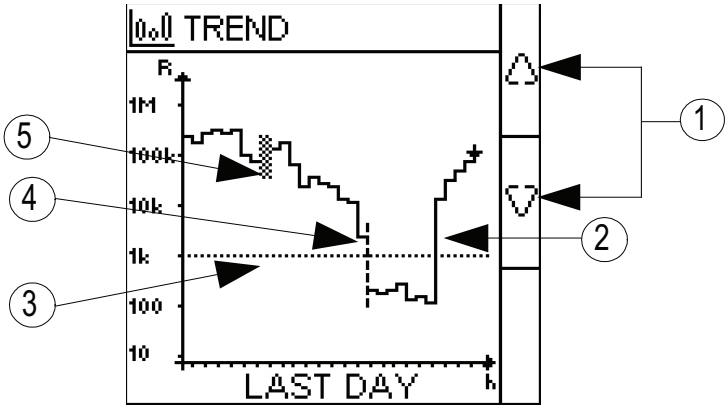


| | |
|---|---|
| 1 | Up and down arrows: To view the pages of trend. The pages are Last hour, Last day |
| 2 | Measured value of the insulation resistance |
| 3 | Existing value of the insulation alarm threshold |
| 4 | Vertical dotted line: indicates a power interruption (duration undefined) |
| 5 | Squared area: indicates that the injection has been inhibited |

# Reset

You can reset logs and trends. Further, you can perform factory reset.

You can access the device reset parameters by selecting **Menu > Settings > Reset**.

The reset parameters are **Reset Logs**, **Reset Trend**, and **Factory Reset**.

On performing reset of logs or trends, the existing logs or trend information is erased but the settings parameter value remains unchanged.On performing factory reset, the settings parameter values are reset to default.

The complete list of parameter settings, its default value, and allowed values are:

| Parameter | Default Value | Allowed Values |
|---|---|---|
| **Ins. Alarm** | **1 kΩ** | **0.04…500 kΩ** |
| **Ins. Al. Delay** | **0 s** | **0 s...120 minutes** |
| **Prev. Alarm** | **OFF** | • **1 kΩ...1 MΩ**<br>• **OFF** |
| **Prev. Al. Del** | **0 s** | **0 s...120 minutes** |
| **Disconnect. Inj** | **OFF** | • **ON**<br>• **OFF** |
| **App** | IM400, IM400L, and IM400C:**Power C**<br>IM400THR and IM400LTHR: **THR** | IM400 and IM400L:<br>• **Power C**<br>• **Control C**<br>IM400C:<br>• **Power C**<br>• **Control C**<br>• **M-RW-PV**<br>IM400THR and IM400LTHR: **THR** |
| **Filtering** | IM400, IM400L, and IM400C:**40s**<br>IM400THR and IM400LTHR:**20s** | IM400, IM400L, and IM400C:<br>• **4s**<br>• **40s**<br>• **400s**<br>IM400THR and IM400LTHR:<br>• **2s**<br>• **20s**<br>• **200s** |
| **Locating** [21] | **OFF** | • **OFF**<br>• **IFL**<br>• **XD** |
| **V.Adapt** | IM400, IM400L, and IM400C:**None**<br>IM400THR and IM400LTHR:**None** | IM400 and IM400L:<br>• **None**<br>• **PHT1000**<br>• **HV1700**<br>IM400C:<br>• **None**<br>• **VA2**<br>• **PHT1000**<br>• **HV1700C**<br>IM400THR and IM400LTHR:<br>• **None**<br>• **P1N** |
| **Frequency** [21] | **50 Hz** | • **50 Hz**<br>• **DC** |

21. Applicable for IM400, IM400L, and IM400C

| Parameter | Default Value | Allowed Values |
|---|---|---|
| | | • 400 Hz<br>• 60 Hz |
| HRG | OFF | • OFF<br>• 0.1....2 MΩ |
| Injection [22] | 20V | • 20V<br>• 40V<br>• 60V<br>• 80V |
| Pri.DC Resis [22] | 0 kΩ | 0....50 kΩ |
| No. of Transfo [22] | 0 | • 0<br>• 1<br>• 3 |
| Ins. Al. Relay | FS | • Std.<br>• FS |
| Prev. Al. Rel | FS | • Std.<br>• FS<br>• Mirror |
| Inhibit. Input | N.O. | • N.O.<br>• N.C.<br>• OFF |
| Ack Inhibit | OFF | • ON<br>• OFF |
| Ack Al. Relay | ON | • ON<br>• OFF |
| Test w. Relays | ON | • ON<br>• OFF |
| Inhibition Type | Int. | • Int.<br>• Ext. |
| Address | 1 | 1...247 |
| Auto Config | OFF | • ON<br>• OFF |
| Baudrate | 19200 | • 4800<br>• 9600<br>• 19200<br>• 38400 |
| Parity | Even | • None<br>• Even<br>• Odd |
| Modify Password | 0000 | 0000...9999 |
| Activation (Password) | OFF | • ON<br>• OFF |
| Contrast | 50% | 10...100% |
| Backlight | 100% | 10...100% |
| Screen Saver | OFF | • ON<br>• OFF |

22. Applicable for IM400THR and IM400LTHR

# Auto-test

## Auto test overview

The device performs a series of auto-tests on start-up, and then at regular intervals during operation, to help detect any potential faults in its internal and external circuits.

The device's auto test function tests:

- The product: indicator lights, internal electronics.
- The measuring chain, the insulation alarm relay and the preventive insulation alarm relay.

The auto-test is triggered:

- Manually at any time by pressing the **T** contextual menu button on one of the system insulation monitoring screens.
- Automatically:

  Whenever the device starts up (power-up or reset)

  Every 5 hours (except when the device has detected an insulation fault, regardless of whether the alarm is active, has been acknowledged, or is transient).

  When injection is activated again after exiting the inhibited injection state.

## Auto test sequence

During auto test, the device's indicator lights illuminate and information is shown on the display.

The following LEDs turn ON in sequence and turn OFF after the predefined time:

1. Insulation status yellow
2. Preventive insulation alarm white
3. Insulation status green
4. Modbus communication yellow
5. Product status red

The relay toggles. See Test with relays, page 62 for information on performing auto test with relays.

- If the auto test is successful, the following screen appears for 3 seconds and a status screen is displayed:

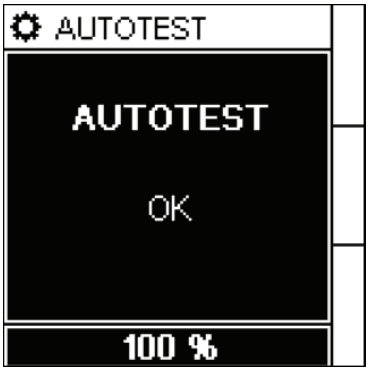

- If the auto test fails, the device automatically restarts. If the fault persists:
  - The red status indicator LED turns ON
  - The insulation alarm relay is triggered
  - **Product Inoperative** message is displayed.

  Disconnect the auxiliary power supply of device and reconnect. If the fault persists, contact technical support.

# Communication

## Communication parameters

Before initiating any communication with the device, you must configure the Modbus communication port. You can configure communication parameters by selecting (**Menu > Settings > Modbus**).

The communication parameters and its allowed and default values are as follows:

| Parameter | Default value | Allowed values |
|---|---|---|
| **Address** | **1** | **1...247** |
| **Auto Config** | **OFF** | • **ON**<br>• **OFF** |
| **Baud rate** | **19200** | • **4800**<br>• **9600**<br>• **19200**<br>• **38400** |
| **Parity** | **Even** | • **None**<br>• **Even**<br>• **Odd** |

To modify the parameter value, see Parameter modification using the display, page 35.

In point-to-point mode, when the device is directly connected to a computer, the reserved address 248 can be used to communicate with the device irrespective of the device internal address.

## Modbus functions

The device supports Modbus function codes.

| Function Code | | Function Name |
|---|---|---|
| **Decimal** | **Hexadecimal** | |
| 3 | 0x03 | Read Holding Registers [23] |
| 4 | 0x04 | Read Input Registers [23] |
| 6 | 0x06 | Write Single Register |
| 8 | 0x08 | Diagnostic Modbus |
| 16 | 0x10 | Write Multiple Registers |
| 43 / 14 | 0x2B / 0E | Read Device Identification |
| 43 / 15 | 0x2B / 0F | Get Date/Time |
| 43 / 16 | 0x2B / 10 | Set Date/Time |
| 98 | 0x62 | Modbus/98 [24] |

### Read Device Identification request

| Number | Type | Value |
|---|---|---|
| 0 | VendorName | Schneider Electric |
| 1 | ProductCode | IMD-IM400 / IMD-IM400C / IMDIM400L / IMDIM400THR / IMDIM400LTHR |

23. The Read Holding and Read Input registers are identical.
24. Refer to Safety standards compliance requirements, page 90 for more details on the Modbus/98 function

### Read Device Identification request (Continued)

| Number | Type | Value |
|---|---|---|
| 2 | MajorMinorRevision | XXX.YYY.ZZZ |
| 3 | VendorURL | www.se.com |
| 4 | ProductName | Insulation Monitoring Device |
| 5 | ModelName | IM400 / IM400C / IM400L / IM400THR / IM400LTHR |

The device answers any type of requests (basic, regular, extended).

# Modbus register table format

Register tables have the following columns.

| Column heading | Description |
|---|---|
| Address | The address of the Modbus, in decimal (dec) and hexadecimal (hex) formats. |
| Register | The register of the Modbus, in decimal (dec) and hexadecimal (hex) formats. |
| R/W | Read only (R) or read/write (R/W) register. |
| Unit | The unit in which the information is expressed. |
| Type | The coding data type.<br>**NOTE:** For the Float32 data type, the byte order follows the Big Endian format. |
| Range | Permitted values for this variable, usually a subset of what the format allows. |
| Description | Provides information about the register and the values applied. |

# Modbus registers table

The following table lists the Modbus registers that apply to your device.

### System status registers

| Address | | Register | | R/W | Unit | Type | Range | Description |
|---|---|---|---|---|---|---|---|---|
| dec | hex | dec | hex | | | | | |
| 100 | 64 | 101 | 65 | R | – | Uint16 | – | Product identifier<br>• 17004 - IM400<br>• 17005 - IM400C<br>• 17006 - IM400L<br>• 17007 - IM400THR<br>• 17008 - IM400LTHR |
| 114..115 | 72...73 | 115...116 | 73...74 | R | – | Uint32 | – | Product state<br>• Bit1 - Reserved<br>• Bit2 - Auto test<br>• Bit3 - Reserved<br>• Bit4 - Safe state<br>• Bit5 - Monitoring<br>• Bit6 - Reserved<br>• Bit7 - Product error<br>• Bit8 - System error<br>• Bit9 - Injection disabled |

## System status registers (Continued)

| Address | | Register | | R/W | Unit | Type | Range | Description |
|---|---|---|---|---|---|---|---|---|
| dec | hex | dec | hex | | | | | |
| | | | | | | | | • Bit10 - Reserved |
| 116 | 74 | 11722 | 75 | R | – | Uint16 | – | Product error codes<br>• 0XFFFF - No error<br>• 0x0000 - Unknown error<br>• 0x0DEF - Undefined model<br>• 0xAF00 - Auto-test failure<br>• 0xBE00 - Metering<br>• 0xC0F1 - Configuration error<br>• 0x5EFA - Sensor call problem<br>• 0xD1A1 - Glued IO<br>• 0xD1A2 - RAM<br>• 0xD1A3 - EEPROM<br>• 0xD1A4 - Relay<br>• 0xD1A5 - Status input<br>• 0xD1A6 - Flash<br>• 0xD1A7 - SIL<br>• 0xE000 - NMI interrupt<br>• 0xE001 - Hard fault exception<br>• 0xE002 - Memory fault exception<br>• 0xE003 - Bus fault exception<br>• 0xE004 - Usage fault exception<br>• 0xE005 - Unexpected interrupt<br>• 0xFAF5 - Unexpected interrupt |
| 120...1-39 | 78...8B | 121...140 | 79...8C | R | – | UTF8 | – | Product family |
| 140...1-59 | 8C...9F | 141...160 | 8D...A0 | R/W | – | UTF8 | – | Product name (User application name) |
| 160...1-79 | A0...B3 | 161...180 | A1...B4 | R | – | UTF8 | – | Product code<br>• IMD-IM400<br>• IMD-IM400C<br>• IMDIM400L<br>• IMDIM400THR<br>• IMDIM400LTHR |
| 180...1-99 | B4...C7 | 181...200 | B5...C8 | R | – | UF8 | – | Manufacturer: Schneider Electric |
| 208...2-19 | D0...DB | 209...220 | D1...DC | R | – | UF8 | – | ASCII serial number |
| 220 | DC | 221 | DD | R | – | Uint16 | – | Manufacturing unit identifier |
| 227...2-46 | E3...F6 | 228...247 | E4...F7 | R | – | UTF8 | – | Product capability |
| 247...2-66 | F7...10-A | 248...267 | F8...10B | R | – | UTF8 | – | Product model<br>• IM400<br>• IM400C<br>• IM400L<br>• IM400THR<br>• IM400LTHR |
| 300...3-06 | 12C...-132 | 301...307 | 12D...133 | R | – | Uint16 | – | Date and time in 7 register format The following parameters correspond to each register:<br>• 300 - Year |

## System status registers (Continued)

| Address | | Register | | R/W | Unit | Type | Range | Description |
|---|---|---|---|---|---|---|---|---|
| dec | hex | dec | hex | | | | | |
| | | | | | | | | • 301 - Month<br>• 302 - Day<br>• 303 - Hour<br>• 304 - Minute<br>• 305 - Second<br>• 306 - Millisecond |
| 307...3-10 | 133...1-36 | 308...311 | 134...137 | R/W | – | Uint16 | – | Date and time in TI081 format. See Date and time (TI081 format), page 84. |
| 320...3-24 | 140...1-49 | 321...325 | 141...145 | R | – | Uint16 | – | Present firmware version<br>• X represents the primary revision number, which is encoded in register 321<br>• Y represents the secondary revision number, which is encoded in register 322<br>• Z represents the quality revision number, which is encoded in register 323 |
| 325...3-29 | 145...1-49 | 326...330 | 146...14A | R | – | Uint16 | – | Previous firmware version<br>• X represents the primary revision number, which is encoded in register 326<br>• Y represents the secondary revision number, which is encoded in register 327<br>• Z represents the quality revision number, which is encoded in register 328 |
| 340...3-44 | 154...1-58 | 341...345 | 155...159 | R | – | Uint16 | – | Boot firmware version<br>• X represents the primary revision number, which is encoded in register 341<br>• Y represents the secondary revision number, which is encoded in register 342<br>• Z represents the quality revision number, which is encoded in register 343 |
| 550...5-55 | 226...2-2B | 551...556 | 227...22C | R | – | UTF8 | – | Existing OS version |
| 556...5-61 | 22C...-231 | 557...562 | 22D...232 | R | – | UTF8 | – | Previous OS version |
| 562...5-67 | 232...2-37 | 563...572 | 233...23C | R | – | UTF8 | – | Existing RS/Boot version |

## Modbus

| Address | | Register | | R/W | Unit | Type | Range | Description |
|---|---|---|---|---|---|---|---|---|
| dec | hex | dec | hex | | | | | |
| 750 | 2EE | 751 | 2EF | R/W | – | Uint16 | 1...247 | Device address<br>Default value: 1 |
| 751 | 2EF | 752 | 2F0 | R/W | – | Uint16 | • 0 = 4800<br>• 1 = 9600<br>• 2 = 19200<br>• 3 = 38400 | Baud rate<br>Default value: 2 (19200) |
| 752 | 2F0 | 753 | 2F1 | R/W | – | Uint16 | • 0 = Even<br>• 1 = Odd<br>• 2 = None | Parity<br>Default value: 0 (Even) |

## Modbus (Continued)

| Address | | Register | | R/W | Unit | Type | Range | Description |
|---|---|---|---|---|---|---|---|---|
| dec | hex | dec | hex | | | | | |
| 753 | 2F1 | 754 | 2F2 | R/W | – | Uint16 | • 0 = Disabled<br>• 1 = Enabled | Automatic configuration<br>Default value: 0 (Diabled) |
| 754 | 2F2 | 755 | 2F3 | R/W | – | Uint16 | • 0 = OFF<br>• 1 = ON | Disable modbus write<br>Default value: 0 (OFF)<br>**NOTE:** This register is only accessible in write mode only using the Modbus/98 protocol (See Safety standards compliance requirements, page 90). It is accessible in read only mode using standard Modbus. |

## Insulation monitoring registers

| Address | | Register | | R/W | Unit | Type | Range | Description |
|---|---|---|---|---|---|---|---|---|
| dec | hex | dec | hex | | | | | |
| 1020...-1021 | 3F-C...3FD | 1021...10-22 | 3FD...3FE | R | Ohm | Float32 | – | Resistance<br>The value NaN (Not a Number) 0xFFC00000 is returned during the auto-test. |
| 1022...-1023 | 3F-E...3FF | 1023...10-24 | 3FF..400 | R | nF | Float32 | – | **NOTE:**<br>Applicable for IM400, IM400C, and IM400L.<br>Capacitance<br>The value NaN (Not a Number) 0xFFC00000 is returned during the auto-test. |
| 1026 | 402 | 1027 | 403 | R | – | Uint16 | • 0 = equal<br>• 1 = under<br>• 2 = over<br>• 3 = understrict<br>• 4= overstrict | R equality |
| 1027 | 403 | 1028 | 404 | R | – | Uint16 | • 0 = equal<br>• 1 = under<br>• 2 = over<br>• 3 = understrict<br>• 4= overstrict | **NOTE:**<br>Applicable for IM400, IM400C, and IM400L.<br>C equality |
| 1029 | 405 | 1030 | 406 | R | V | Float32 | – | RMS Voltage to ground |
| 1031 | 407 | 1032 | 408 | R | V | Float32 | • 0 = Injection active<br>• 1 = Injection inactive | Injection status |

## Insulation alarm

| Address | | Register | | R/W | Unit | Type | Range | Description |
|---|---|---|---|---|---|---|---|---|
| dec | hex | dec | hex | | | | | |
| 1100 | 44C | 1101 | 44D | R | – | Uint16 | • 0 = No alarm<br>• 1 = Insulation alarm active<br>• 2 = Preventive insulation alarm active<br>• 4 = Transient insulation alarm active<br>• 8 = Insulation alarm acknowledged | Insulation alarm |
| 1102 | 44E | 1103 | 44F | R | – | Uint16 | – | Product alarm status<br>• Bit 1 - Status<br>This bit is set for any of the following states:<br>◦ Active alarm<br>◦ Active preventive alarm<br>◦ Alarm acknowledged<br>◦ First measurement<br>• Bit 13 - System error<br>This bit is set for the following states:<br>◦ Disconnected injection<br>◦ Over voltage<br>◦ Over capacitance<br>• Bit 14 - Product error<br>This bit is set for auto test failure state.<br>• Bit 15 - Injection disabled |
| 1103 | 44F | 1104 | 450 | R | – | Uint16 | – | Compliment for product alarm status |

## Insulation alarm (Continued)

| Address | | Register | | R/W | Unit | Type | Range | Description |
|---|---|---|---|---|---|---|---|---|
| dec | hex | dec | hex | | | | | |
| 1104...-1105 | 450...45-1 | 1105...1-106 | 451...452 | R | – | Uint32 | 0...0XFFFFFFFF | Status counter |
| 1110...1-111 | 456...45-7 | 1111...1-112 | 457...458 | R | – | Uint32 | – | Product status<br>• 0 - No alarm<br>• Bit 1 - Active alarm<br>• Bit 2 - Active pre-alarm<br>• Bit 3 - Transient alarm<br>• Bit 4 - Alarm acknowledged<br>• Bit 5 - Reserved<br>• Bit 6 - Reserved<br>• Bit 7 - Reserved<br>• Bit 8 - Reserved<br>• Bit 9 - First measurement<br>• Bit 10 - Reserved<br>• Bit 11 - Reserved<br>• Bit 12 - Reserved<br>• Bit 13 - Auto test<br>• Bit 14 - Reserved<br>• Bit 15 - Injection disable<br>• Bit 16 - Reserved<br>• Bit 17 - Disconnected injection<br>• Bit 18 - Over limit capacitance<br>• Bit 19 - Over voltage<br>• Bit 20 - Reserved<br>• Bit 21 - Reserved<br>• Bit 22 - Reserved<br>• Bit 23 - Reserved<br>• Bit 24 - Reserved<br>• Bit 25 - Product error<br>• Bit 26 - Reserved<br>• Bit 27 - Reserved<br>• Bit 28 - Reserved<br>• Bit 29 - Reserved<br>• Bit 30 - Reserved<br>• Bit 31 - HV1 and HV2 open<br>• Bit 32 - Power Down |

## Diagnostics

| Address | | Register | | R/W | Unit | Type | Range | Description |
|---|---|---|---|---|---|---|---|---|
| dec | hex | dec | hex | | | | | |
| 2000 | 7D0 | 2001 | 7D1 | W | – | Uint16 | 0xA456 = run auto-test | Run the auto-test of the product without testing the relay (same as the auto-test cycle). |
| 2001...-2004 | 7D1...7-D4 | 2002...2-005 | 7D2...7D5 | R | – | Date/ Time | – | Total uptime since first power up of product.<br>Registers correspond to (result - 01/01/2000) = total uptime.<br>TI081 date format (See Date and time (TI081 format), page 84) |
| 2005...-2006 | 7D5...7-D6 | 2006...2-007 | 7D6...7D7 | R | – | Uint32 | – | Total number of power cycles since first power-up of the product |

## Diagnostics (Continued)

| Address | | Register | | R/W | Unit | Type | Range | Description |
|---|---|---|---|---|---|---|---|---|
| dec | hex | dec | hex | | | | | |
| 2050 | 802 | 2051 | 803 | W | – | Uint16 | – | Write 0x1919 to reset factory settings (default factory settings) |
| 2051 | 803 | 2052 | 804 | W | – | Uint16 | – | Write 0xF0A1 to reset all logs |
| 2052 | 804 | 2053 | 805 | W | – | Uint16 | – | Write 0x25AB to reset all graphs |

## CRC

| Address | | Register | | R/W | Unit | Type | Range | Description |
|---|---|---|---|---|---|---|---|---|
| dec | hex | dec | hex | | | | | |
| 2500...-2501 | 9C4...9-C5 | 2501...2-502 | 9C5...9C6 | R | – | Uint32 | – | Application CRC value. |
| 2502...-2503 | 9C6...9-C7 | 2503...2-504 | 9C7...9C8 | R | – | Uint32 | – | Boot CRC value |

## Settings

| Address | | Register | | R/W | Unit | Type | Range | Description |
|---|---|---|---|---|---|---|---|---|
| dec | hex | dec | hex | | | | | |
| 2997...-2998 | BB5...BB6 | 2998...2-999 | BB6...BB7 | R | – | Uint16 | – | Total number of settings changed since first power-up. Incremented by 1 for each change of one or several parameters. |
| 3000 | BB8 | 3001 | BB9 | R/W | — | Uint16 | • 0 = Normally open<br>• 1 = Normally closed<br>• 2 = OFF | Injection inhibition<br>Default value: 0 (Normally open) |
| 3001 | BB9 | 3002 | BBA | R/W | – | Uint16 | • 1= Standard<br>• 2 = Failsafe | Insulation alarm relay logic command<br>Default value: 2 (Failsafe) |
| 3002...-3003 | BBA...BBB | 3003...3-004 | BBB...BBC | R/W | Ohm | Uint32 | 0.04...500 kΩ | Insulation alarm threshold<br>Default value: 1 kΩ |
| 3004...-3005 | BBC...BBD | 3005...3-006 | BBD...BBE | R/W | Ohm | Uint32 | • 1 kΩ...1 MΩ<br>• 0xFFFFFFFF = OFF | Preventive alarm threshold<br>OFF is used to deactivate the preventive alarm.<br>Default value: 0xFFFFFFFF |
| 3007 | BBF | 3008 | BC0 | R/W | s | Uint16 | 0...7200 s | Insulation alarm time delay (in seconds)<br>Default value: 0 s |
| 3008 | BC0 | 3009 | BC1 | R/W | – | Uint16 | For IM400, IM400C, and IM400L:<br>• 0 = 4s<br>• 1 = 40s<br>• 2 = 400s<br>For IM400THR and IM400LTHR:<br>• 0 = 2s<br>• 1 = 20s<br>• 2 = 200s | Network filtering<br>For IM400, IM400C, and IM400L: Default value: 1(40s)<br>For IM400THR and IM400LTHR: Default value: 1(20s) |
| 3009 | BC1 | 3010 | BC2 | R/W | Hz | Uint16 | • 0 Hz<br>• 50 Hz<br>• 60 Hz<br>• 400 Hz | Network frequency<br>Default value: 50 Hz |

## Settings (Continued)

| Address | | Register | | R/W | Unit | Type | Range | Description |
|---|---|---|---|---|---|---|---|---|
| dec | hex | dec | hex | | | | | |
| 3014 | BC6 | 3015 | BC7 | R/W | – | Uint16 | 0000...9999 | Password<br>Default value: 0000 |
| 3015 | BC7 | 3016 | BC8 | R/W | – | Uint16 | • 0 = OFF<br>• 1 = ON | Password protection<br>Default value: 0 (password protection deactivated) |
| 3016 | BC8 | 3017 | BC9 | R/W | – | Uint16 | • 0 = English<br>• 1 = French<br>• 2 = Spanish<br>• 3 = Russian<br>• 4 = Chinese<br>• 5 = Italian<br>• 6 = German<br>• 7 = Portuguese | Interface language<br>Default value: 0 (English) |
| 3017 | BC9 | 3018 | BCA | R/W | % | Uint16 | 10...100% | Screen contrast<br>Default value: 50% |
| 3018 | BCA | 3019 | BCB | R/W | % | Uint16 | 10...100% | Screen brightness.<br>Default value: 100% |
| 3019 | BCB | 3020 | BCC | R/W | – | Uint16 | For IM400 and IM400L:<br>• 0 = None<br>• 1 = HV1700<br>• 2 = PHT1000<br>For IM400C:<br>• 0 = None<br>• 1 = HV1700C<br>• 2 = PHT1000<br>• 3 = VA2<br>For IM400THR and IM400LTHR:<br>• 4 = P1N<br>• 5 = None | High voltage adapter<br>Default value: 0 (no adapter)<br>For IM400THR and IM400LTHR: Default value: 5 (no adapter) |
| 3021 | BCD | 3022 | BCE | R/W | s | Uint16 | 0...7200 s | Preventive insulation alarm time delay (in seconds)<br>Default value: 0 s |
| 3023 | BCF | 3024 | BD0 | R/W | – | Uint16 | • 0 = Disabled<br>• 1 = Enabled | Acknowledge alarm relay<br>Default value: 1 (Enabled) |
| 3024 | BD0 | 3025 | BD1 | R/W | – | Uint16 | For IM400THR and IM400LTHR:<br>• 0 = 20V<br>• 1 = 40V<br>• 2 = 60V<br>• 3 = 80V | **NOTE:**<br>Applicable for IM400THR and IM400LTHR.<br>Injection voltage<br>Default value: 2 (60V) |
| 3025 | BD1 | 3026 | BD2 | R/W | – | Uint16 | For IM400 and IM400L:<br>• 0 = Power<br>• 1 = Control<br>For IM400C:<br>• 0 = Power<br>• 1 = Control<br>• 2 = M-RW-PV<br>For IM400THR and IM400LTHR: 3 = THR | User application<br>Default value: 0 (Power)<br>For IM400THR and IM400LTHR: Default value: 3 (THR) |

## Settings (Continued)

| Address | | Register | | R/W | Unit | Type | Range | Description |
|---|---|---|---|---|---|---|---|---|
| dec | hex | dec | hex | | | | | |
| 3026 | BD2 | 3027 | BD3 | R/W | – | Uint16 | • 0 = OFF<br>• 1 = ON | Disconnected injection detection<br>Default value: 0 (OFF) |
| 3027 | BD3 | 3028 | BD4 | R/W | – | Uint16 | • 0 = OFF<br>• 1 = XD<br>• 3 = IFL | **NOTE:**<br>Applicable for IM400, IM400L, and IM400C.<br>Insulation fault locating<br>Default value: 0 (OFF) |
| 3028 | BD4 | 3029 | BD5 | R/W | – | Uint16 | 0...50 | **NOTE:**<br>Applicable for IM400, IM400L, and IM400C.<br>Number of IFL<br>Default value: 0 |
| 3029 | BD5 | 3030 | BD6 | R/W | – | Uint16 | • 0 = OFF<br>• 1 = ON | Auto-test: test with relays<br>Default value: 1 (ON) |
| 3030...-3031 | BD6...BD7 | 3031...3-032 | BD7...BD8 | R/W | Ω | Uint32 | • 0.1...500 kΩ<br>• 0xFFFFFFFF = OFF | HRG (Grounding resistance for impedant ungrounded system)<br>Default value: 0xFFFFFFFF = OFF (Disabled) |
| 3032 | BD8 | 3033 | BD9 | R/W | – | Uint16 | • 0 = OFF<br>• 1 = ON | Alarm when injection inhibition is active.<br>Default value: 1 (ON) |
| 3033 | BD9 | 3034 | BDA | R/W | – | Uint16 | • 0 = OFF<br>• 1 = ON | Screen saver activation<br>Default value: 0 (OFF) |
| 3034 | BDA | 3035 | BDB | R/W | s | Uint16 | 30....3600 s | Screen saver delay<br>Default value: 300 s (5 min) |
| 3035 | BDB | 3036 | BDC | R/W | – | Uint16 | • 0 = OFF<br>• 1 = ON | Inhibition input<br>Default value: 0 (OFF) |
| 3036 | BDC | 3037 | BDD | R/W | Ω | Uint16 | 0....50 KΩ | **NOTE:**<br>Applicable for IM400THR and IM400LTHR.<br>Transformer primary DC resistance.<br>Default value: 0 |
| 3037 | BDD | 3038 | BDE | R/W | – | Uint16 | • 0<br>• 1<br>• 3 | **NOTE:**<br>Applicable for IM400THR and IM400LTHR.<br>Number of transformers.<br>Default value: 0 |
| 3038...-3039 | BDE...BDF | 3039...3-040 | BDF...BE0 | R/W | Ω | Float32 | – | **NOTE:**<br>Applicable for IM400THR and IM400LTHR.<br>Adapter offset resistance.<br>Default value: 0 |
| 3040 | BE0 | 3041 | BE1 | R/W | – | Uint16 | • 1 = Standard<br>• 2 = Failsafe<br>• 2 = Mirror | Logical command of the preventive insulation alarm relay<br>Default value: 2 (Failsafe) |

## Settings (Continued)

| Address | | Register | | R/W | Unit | Type | Range | Description |
|---|---|---|---|---|---|---|---|---|
| dec | hex | dec | hex | | | | | |
| 3041 | BE1 | 3042 | BE2 | R/W | s | Uint16 | 0...7200 s | Preventive insulation alarm time delay (in seconds)<br>Default value: 0 s |
| 3044...-3045 | BE4...BE5 | 3045...3-046 | BE5...BE6 | R/W | – | Uint32 | – | Insulation alarm relay bit map<br>• Bit0 - Preventive insulation alarm<br>• Bit1..3 - Reserved<br>• Bit4 - Insulation alarm (read only)<br>• Bit5..7 - Reserved<br>• Bit8 - Injection inhibit<br>• Bit9..15 - Reserved<br>• Bit16 - System error<br>• Bit17..23 - Reserved<br>• Bit24 - Product error<br>• Bit25..31 - Reserved |
| 3046...-3047 | BE6...BE7 | 3047...3-048 | BE7...BE8 | R/W | – | Uint32 | – | Preventive insulation alarm relay bit map<br>• Bit0 - Preventive insulation alarm (read only)<br>• Bit1..3 - Reserved<br>• Bit4 - Insulation alarm<br>• Bit5..7 - Reserved<br>• Bit8 - Injection inhibit<br>• Bit9..15 - Reserved<br>• Bit16 - System error<br>• Bit17..23 - Reserved<br>• Bit24 - Product error<br>• Bit25..31 - Reserved |
| 3048 | BE8 | 3049 | BE9 | R/W | – | Uint16 | • 0 = Internal Inhibition<br>• 1 = External Inhibition | Inhibition type<br>Default value: 0 (Internal Inhibition) |

## Trending

| Address | | Register | | R/W | Unit | Type | Range | Description |
|---|---|---|---|---|---|---|---|---|
| dec | hex | dec | hex | | | | | |
| 12000 | 2EE0 | 12001 | 2EE1 | R | – | Uint16 | Hour trending | Number of new records in trending buffer not yet read by the Modbus master. |
| 12001 | 2EE1 | 12002 | 2EE2 | R | – | Uint16 | Day trending | Number of new records in trending buffer not yet read by the Modbus master. |
| 12010.-..12011 | 2EE-A...2EE-B | 12011...-12012 | 2EE-B...2EEC | R | – | Float32 | Hour value | Reading hour values<br>Each reading decrements the counter at address 12000. |
| 12012 | 2EEC | 12013 | 2EED | R | – | Uint16 | Hour value status | Status:<br>• 0x0000 - Data not initialized<br>• 0x0001 - Data invalid<br>• 0x0002 - Data valid<br>• 0x0003 - Power supply loss after this value<br>• 0x0004 - Injection disable after this value |

### Trending (Continued)

| Address | | Register | | R/W | Unit | Type | Range | Description |
|---|---|---|---|---|---|---|---|---|
| dec | hex | dec | hex | | | | | |
| | | | | | | | | • 0x0005 - Power supply loss and injection disable after this value |
| 12013...12014 | 2EED...2EEE | 12014...12015 | 2EEE...2EEF | R | – | Float32 | Day value | Reading day values<br>Each reading decrements the counter at address 12031. |
| 12015 | 2EEF | 12016 | 2EF0 | R | – | Uint16 | Day value status | Status:<br>• 0x0000 - Data not initialized<br>• 0x0001 - Data invalid<br>• 0x0002 - Data valid<br>• 0x0003 - Power supply loss after this value<br>• 0x0004 - Injection disable after this value<br>• 0x0005 - Power supply loss and injection disable after this value |

### Logging

| Address | | Register | | R/W | Unit | Type | Range | Description |
|---|---|---|---|---|---|---|---|---|
| dec | hex | dec | hex | | | | | |
| 19996...19997 | 4E1C...4E1D | 19997...19998 | 4E1D...4E1E | R | – | Uint32 | – | Roll over counter |
| 19998...19999 | 4E1E...4E1F | 19999...20000 | 4E1F...4E20 | R | – | Uint32 | 1...240 | Number of event records |
| 20001 | 4E21 | 20002 | 4E22 | R | – | Uint16 | – | Most recent record number |
| 20002...20013 | 4E22...4E2D | 20003...20014 | 4E23...4E2E | R | – | Record | – | Record 1 |
| 20014...20025 | 4E2E...4E39 | 20015...20026 | 4E2F...4E3A | R | – | Record | – | Record 2 |
| ... | | | | | | | | |
| 20338...20349 | 4F72...4F7D | 20339...20350 | 4F73...4F7E | R | – | Record | – | Record 30 |
| 20710...20721 | 50E6...50F1 | 20711...20722 | 50E7...50F2 | R | – | Record | – | Record 60 |

# Alarm event records

Each event is stored using two records:

- A "primary" record, which is created when the insulation alarm or preventive insulation alarm occurs. This contains the insulation value.

- A "secondary" record, which is created for the following type of events:
  - Acknowledged insulation alarm
  - Transient insulation alarm
  - Power failure or power cycle
  - Product error
  - Injection disable
  - Over capacitance
  - Over voltage

    **NOTE:** The listed secondary records are applicable for insulation alarm and preventive insulation alarm.

### Description of an Event Record in the Log

| Register | Unit | Type | Range | Description |
|---|---|---|---|---|
| Word 1 | – | Uint16 | 1...65535 | Event record number |
| Word 2<br>Word 3<br>Word 4<br>Word 5 | – | Uint64 | – | Time tagging of event (using the same code as for the product date/time) |
| Word 6<br>Word 7 | – | Uint32 | • 0x00….0xFF<br>• 0x40, 0x20<br>• 1020...1021, 1110 | Record identifier:<br>• Word 6, most significant byte: information for primary/secondary record. This field identifies the type of primary and secondary record.<br>• Word 6, least significant byte: type of data stored in the Value field.<br>• Word 7: address of the Modbus register that is the source of the data in the Value field. |
| Word 8<br>Word 9<br>Word 10<br>Word 11 | – | Uint64 | – | Depending on the type of record (primary or secondary):<br>• Primary record (when the event occurs): Insulation resistance value (in Ohm) when the event occurred (encoded in Float32 in the last 2 registers).<br>• Secondary record (for the earlier list of events) (encoded in Uint32 in the last 2 registers) |
| Word 12 | – | Uint16 | 1...65534 | Primary/secondary record identifier for the event:<br>• In the case of a primary record for an event, this identifier is an odd integer; numbering starts at 1 and the number is incremented by 2 for each new event.<br>• In the case of a secondary record for an event, this identifier is equal to the primary record identifier plus 1. |

For the Word 6 (most significant bytes), the ranges are 0x00….0xFF. The assigned bytes for the primary and secondary events are listed as follows:

| Event | Byte |
|---|---|
| **Primary events** | |
| Preventive insulation alarm | 0x01 |
| Insulation alarm | 0x02 |
| **Secondary events** | |
| Nominal | 0x21 |
| Transient insulation alarm | 0x22 |
| Acknowledged insulation alarm | 0x23 |
| Injection disabled | 0x24 |
| Over capacitance | 0x25 |
| Over voltage | 0x26 |

| Event | Byte |
|---|---|
| Product error | 0x27 |
| Power failure or power cycle | 0x28 |
| Preventive Nominal | 0x41 |
| Preventive transient insulation alarm | 0x42 |
| Preventive acknowledged insulation alarm | 0x43 |
| Preventive injection disabled | 0x44 |
| Preventive over capacitance | 0x45 |
| Preventive over voltage | 0x46 |
| Preventive product error | 0x47 |
| Preventive power failure or power cycle | 0x48 |

# Example of an event

The next 2 records relate to an example insulation alarm that occurred on October 1, 2010 at 12:00 pm and was acknowledged at 12:29 pm.

### Record number: 1

| Address | | Register | | Unit | Type | Value | Description |
|---|---|---|---|---|---|---|---|
| dec | hex | dec | hex | | | | |
| 20002 | 4E22 | 20003 | 4E23 | – | Uint16 | 1 | Record number |
| 20003 | 4E23 | 20004 | 4E24 | – | Uint64 | • 10<br>• 0<br>• 10<br>• 1<br>• 12<br>• 0<br>• 0 | Date when insulation alarm occurred (October 1, 2010, 12:00 pm) |
| 20007 | 4E27 | 20008 | 4E28 | – | Uint32 | • 0x02<br>• 0x40<br>• 1020 | Record identifier:<br>• Primary record plus secondary record<br>• Float32 value (insulation resistance)<br>• Value of register 1020 (register for insulation resistance monitoring) |
| 20009 | 4E29 | 20010 | 4E2A | Ohm | Uint64 | 10000 | Insulation resistance value at the time of the insulation alarm |
| 20013 | 4E2D | 20014 | 4E2E | – | Uint16 | 1 | Secondary record identifier for the event |

### Record number: 2

| Address | | Register | | Unit | Type | Value | Description |
|---|---|---|---|---|---|---|---|
| dec | hex | dec | hex | | | | |
| 20014 | 4E2E | 20015 | 4E2F | – | Uint16 | 2 | Record number |
| 20015 | 4E2F | 20016 | 4E30 | – | Uint64 | • 10<br>• 0<br>• 10<br>• 1<br>• 12<br>• 29<br>• 0 | Date when insulation alarm acknowledged (October 1, 2010, 12:29 pm) |

**Record number: 2 (Continued)**

| Address | | Register | | Unit | Type | Value | Description |
|---|---|---|---|---|---|---|---|
| dec | hex | dec | hex | | | | |
| 20019 | 4E33 | 20020 | 4E34 | – | Uint32 | • 0x23<br>• 0x20<br>• 1110 | Record identifier:<br>• Secondary record<br>• Uint32 value (alarm acknowledged)<br>• 1110 register value ( product status register). |
| 20021 | 4E35 | 20022 | 4E36 | – | Uint64 | 8 | Value of insulation alarm register at the time of insulation alarm acknowledgement |
| 20025 | 4E39 | 20026 | 4E3A | – | Uint16 | 2 | Secondary record identifier for the event |

# Date and time (TI081 format)

The following structure is used for date-time information exchange using Modbus protocol.

The date/time are encoded in 8 bytes as follows:

| b15 | b14 | b13 | b12 | b11 | b10 | b09 | b08 | b07 | b06 | b05 | b04 | b03 | b02 | b01 | b00 | Word |
|---|---|---|---|---|---|---|---|---|---|---|---|---|---|---|---|---|
| 0 | 0 | 0 | 0 | 0 | 0 | 0 | 0 | R4 | Y | Y | Y | Y | Y | Y | Y | Word 1 |
| 0 | 0 | 0 | 0 | M | M | M | M | WD | WD | WD | D | D | D | D | D | Word 2 |
| SU | 0 | 0 | H | H | H | H | H | iV | 0 | mn | mn | mn | mn | mn | mn | Word 3 |
| ms | ms | ms | ms | ms | ms | ms | ms | ms | ms | ms | ms | ms | ms | ms | ms | Wrod 4 |

- R4: Reserved bit (reserved by IEC870-5-4), set to 0
- Y - Years
  - 1 byte
  - Value from 0...127 (1/1/2000 to 31/12/2127)
- M - Months
  - 1 byte
  - Value from 1...12
- D - Days
  - 1 byte
  - Value from 1...31
- H - Hours
  - 1 byte
  - Value from 0...23
- mn - Minutes
  - 1 byte
  - Value from 0...59
- ms - Milliseconds
  - 2 byte
  - Value from 0...59999

The following fields are in CP56Time2a standard and are considered as optional:

- WD - Week Day
  - If not used, set to 0 (1 = Sunday, 2 = Monday...)
  - Value from 1...7
- SU - Summertime
  - If not used, set to 0 (0 = standard time, 1 = summertime)
  - Value from 0...1
- iV - Validity of the information contained in the structure
  - If not used, set to 0 (0 = valid, 1 = not valid or not synchronized in system)
  - Value from 0...1

This information is encoded in binary form.

# Commissioning, maintenance and troubleshooting

## Safety precautions

The following safety precautions must be thoroughly implemented before attempting to commission the system, repair electrical equipment or carry out maintenance.

Carefully read and follow the safety precautions described below.

**⚠⚠ DANGER**

**HAZARD OF ELECTRIC SHOCK, EXPLOSION, OR ARC FLASH**

- Apply appropriate Personal Protective Equipment (PPE) and follow safe electrical work practices. See NFPA 70E, CSA Z462 or other local standards.
- Turn off all power supplying this device and the equipment in which it is installed before working on or in the equipment.
- Always use a properly rated voltage sensing device to confirm that all power is off.

**Failure to follow these instructions will result in death or serious injury.**

***NOTICE***

**EQUIPMENT DAMAGE**

- Do not open this unit.
- Do not attempt to repair any components of this product or any of its accessory products.

**Failure to follow these instructions can result in equipment damage.**

# Commissioning

## Validating correct insulation monitoring with exclusion management

To have proper insulation monitoring of the electrical power system, it is important that it is monitored by one insulation monitoring device at a time.

For most of the systems that do not include multiple incomers or coupling of multiple busbars, this is easily achieved because there is only one device in the system permanently active.

For systems with multiple incomers or power busbar coupling, the monitoring system embeds several devices (See). The exclusion/activation of each device according to the electrical power system configuration is managed through the injection inhibit contact. It is important at commissioning to validate that insulation of every part of the electrical power system is monitored by an active device and that the management of exclusion/activation of each device does not lead to a part of the power system monitored by more than one device or no device. This is to avoid insulation fault not being reported.

## Insulation metering and insulation fault detection testing

To verify the device is correctly installed and configured:

- Check the installation by connecting a known impedance between wiring terminals 1 and 3 of the device (10 kΩ) and verifying that the impedance is correctly measured. For this test, do not connect the device to the monitored network.
- Check the insulation fault detection by strapping wiring terminals 1 and 3 of the device (creating a 0 Ω insulation fault). For this test, do not connect the device to the monitored network.

## Insulation alarm relay wiring testing

To verify the insulation alarm relay is correctly wired in the installation, perform a device test with the relay.

## Disconnected injection detection

By default, the disconnected injection detection parameter is set to **OFF**. This setting avoids the **Disconnected Injection Detected** message to display when installing and commissioning the device before connecting it to the power system and load.

According to the system or application requirements, you can enable the disconnected injection detection parameter (setting it to **ON**) when executing the final commissioning. Thus the device can continuously perform this check during operation and report any injection connection or wiring issue.

## HV1/HV2 wiring testing

The connection between the device and the voltage adaptors IM400-1700, PHT1000, IM400VA2, or P1N is key for a correct behavior of device.

Check the wiring of HV1 and HV2 wiring terminals to the voltage adaptor. Connect a known impedance (for example, 10 kΩ) between IM400-1700 wiring terminal 1 and the device wiring terminal 3, or between PHT1000 wiring terminal 3 and device wiring terminal 3, or between IM400VA2 wiring terminal 5 / terminal 1 (connecting terminal 5 and 1 together) and the device wiring terminal 3, or between P1N wiring terminal 2 and device wiring terminal 3. Check that the device correctly measures the impedance. For this test, do not connect IM400-1700, PHT1000, IM400VA2, or P1N to the monitored power system.

## Protection password setting

To avoid any unintended operation by not authorized or untrained personnel, set the protection password.

# ON light indicator

If the **ON** light indicator is red, there is an error in the power system or your device.

The error is one of the following cases:

- Interruption of the injection circuit
- Auto test not OK
- Product error
- System error

- Over limit capacitance:
  - C > 500 µF
  - C > 2,000 µF with IM400-1700 voltage adaptor or C > 5,000µF with IM400VA2 voltage adaptor in photovoltaic application

# Disconnected injection detection

The device displays a message if it does not detect an injection signal.

If the injection circuit of the device is interrupted, the display shows the following message and starts to flash:

By default, the disconnected injection detection parameter is activated (parameter **Disconnect. Inj** is set to **ON**).

When installing and commissioning the unit and the electrical panel, before you plug the equipment to the electrical power system, set parameter **Disconnect. Inj.** to **OFF** to prevent the message from being displayed.

Depending on the demands of the electrical network or the application, during the final commissioning, you may need to reactivate the disconnected injection detection parameter (by selecting **Settings > Ins. Alarm > Disconnect. Inj.** set to **ON**). Therefore, the device constantly monitors during operation and reports any injection connection or wiring problem.

# Troubleshooting

There are some checks you can perform to try to identify potential issues with the device's operation.

The following table describes potential problems, their possible causes, checks you can perform and possible solutions for each. After referring to this table, if you cannot resolve the problem, contact your local Schneider Electric sales representative for assistance.

| Potential problem | Possible cause | Possible solution |
|---|---|---|
| The device displays nothing when switched on. | No power supply to the device. | Check that the auxiliary power supply is present. |
| | The auxiliary power supply is not compliant. | Check the auxiliary voltage: U = 110...480 Vac |
| The device notified an insulation fault, but your system shows no signs of abnormal behavior. | The insulation alarm threshold is not appropriate. | Check the value of the insulation alarm threshold. Modify the insulation alarm threshold as appropriate. |
| | The preventive alarm threshold for faults is not appropriate. | Check the value of the preventive insulation alarm threshold. Modify the preventive insulation alarm threshold as appropriate. |

| Potential problem | Possible cause | Possible solution |
|---|---|---|
| You deliberately created an insulation fault, but the device failed to detect it. | The resistance value used to simulate the fault is greater than the value of the insulation alarm threshold. | Use a resistance value that is lower than the insulation alarm threshold or modify the insulation alarm threshold. |
| | The fault is not detected between neutral and ground. | Start again ensuring you are between neutral and ground. |
| The product status LED is red and the display shows **DISCONNECTED INJECTION DETECTED**. | No electrical installation has been connected to the electrical panel when commissioning. | • Check the connection on the injection terminal block (terminals 1 and 3) and restart the auto-test.<br>• Disable the function during commissioning. |
| | The injection wire or the ground wire for the device is cut. | |
| | The device considers an electrical power system with low capacitance and high resistance to be a disconnected injection. | |
| The product status LED is red and the display indicates that an error occurred during the auto-test. | The device's injection circuit is cut off. | Briefly disconnect the auxiliary power supply to the device. |
| Although the device is being supplied with power, the product status LED does not light up. | Faulty indicator light. | Restart the auto-test and check that the product status LED lights up briefly. |
| The alarm LED does not light up in the event of a fault. | Faulty indicator light. | Restart the auto-test and check that the alarm LED lights up briefly. |
| Nuisance alarms | Highly disturbed ungrounded power systems with potential power quality issues | Check the value of the filtering. Modify the filtering as appropriate. |
| Slow device response time | The filtering is not appropriate. | Check the value of the filtering. Modify the filtering as appropriate. |

# Functional safety standards compliance

## Safety standards compliance requirements

### Introduction

The device is SIL 2 and SIL 1 certified in compliance with IEC 61508: 2010 (standard related to Functional Safety) and IEC 61557-15: 2014 (based on IEC 61508, specific for IT systems using IMDs and IFLs devices).

The classification of safety function:

| Function | SIL |
|---|---|
| RIW (Remote Insulation Warning)<br><br>Used with redundant actuators | SIL 2 |
| RIW (Remote Insulation Warning) or REDC (Remote enabling / disabling command)<br><br>Used with single actuator | SIL 1 |

The following model and commercial references are certified:

| Model | Commercial Reference |
|---|---|
| IM400 | IMD-IM400 |
| IM400C | IMD-IM400C |
| IM400THR | IMDIM400THR |

### Scope

The device and accessories (voltage adaptors) certification is valid if the installation and wiring of the system abides with the description explained.

### Product Setup

To comply with the Functional Safety Standards requirements, the device must be configured using the following parameters, accessible by selecting **Menu > Settings > I/O Config**:

| Parameter | Description | Value |
|---|---|---|
| **Ins. Al. Relay** | Insulation alarm relay | **FS** |
| **Prev. Al. Rel** | Preventive insulation alarm relay | **Mirror** |
| **Inhibit. Input** | Injection inhibition input | **N.O** or **OFF** |
| **Ack Inhibit** | Acknowledgement of the inhibition signal | **ON** |
| **Ack. Al. Relay** | Allow triggering relays when acknowledging alarm | **OFF** |
| **Test w. Relays** | Toggle Relays during manual auto test | **OFF** |

To modify the parameter value, see I/O configuration, page 47.

# Product installation and wiring

## Relays

The device provides a configuration option to comply with safety and application standards. The preventive alarm relay used as a mirrored actuators along with the insulation alarm relay to provide a global safety function (with inverted redundancy).

You can activate this function through a relay setting called Mirror Mode: **Menu > Settings > I/O Config > Prev.Al.Rel > Mirror**

> **NOTE:** When this mode is activated, the Preventive Insulation Alarm is only signaled through the white LED and Modbus communication.

Once activated, the preventive alarm relay mirrors the alarm relay in inverted logic. During product deficiency or a power outage, both relays are de-energized and drops to the same level, as follows:

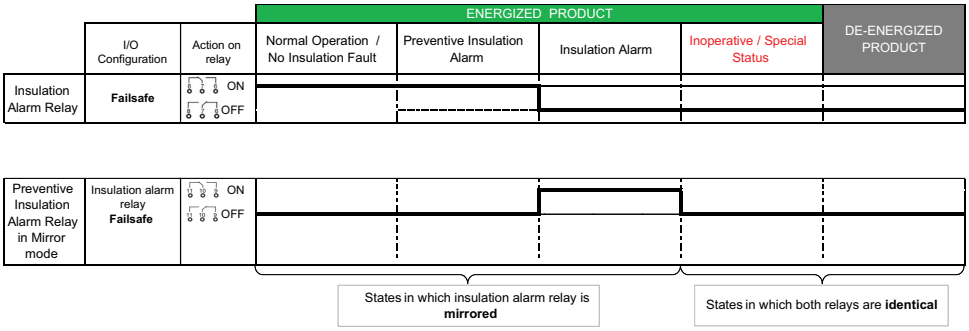


This allows you to easily separate an Insulation Fault signal from an Inoperative Product signal by implementing a series of simple wiring (or connection to a PLC).

## Status input

Enabling the **Ack Inhibit** (Acknowledge Inhibition) option activates the trigger of an alarm when the injection inhibition is activated. (See Injection inhibition input (**Inhibit. Input**), page 54). This allows the system in which the device is installed to detect errors from the injection inhibition command (external wiring and internal components).

If the installation does not require the use of exclusion management or if the system implements the Modbus/98 protocol, an **OFF** option allows you to disable the Injection Inhibition input, providing a complete functional isolation. The electrical state changes on this input are then ignored (Injection inhibition input option **OFF**) (See Injection inhibition input (**Inhibit. Input**), page 54).

## PLC

For the system to detect all the product states, the device must be connected to a PLC or equivalent device, as follows:

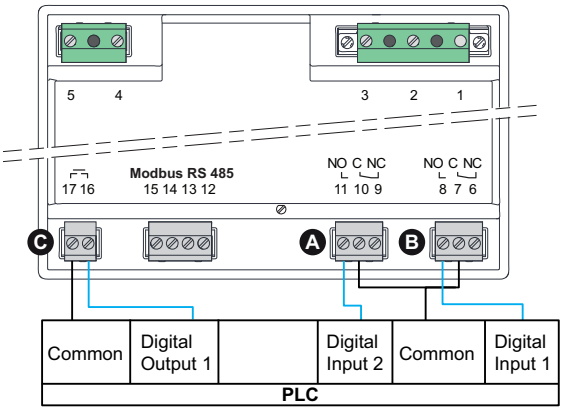


For the PLC to cover the state of all the products the following configuration must be implemented:

| **Operation** | | **Injection inhibition**<br><br>**Digital output 1** | **Insulation alarm relay**<br><br>**Digital input 1** | **Preventive insulation alarm relay**<br><br>**Digital input 2** |
|---|---|---|---|---|
| Normal operation | No insulation fault/ preventive insulation alarm | Open | Closed | Open |
| | Insulation alarm | Open | Open | Closed |
| | Injection disabled | Closed | Open | Closed |
| Inoperative product | Status input issue | Closed | Closed | Open |
| | Inoperative product | - | Closed | Closed |
| | Inoperative product | - | Open | Open |

# Commissioning for functional safety standards compliance

## Introduction

In a Functional Safety Standards-compliant installation, you must test the complete device and system setup before deployment of the installation.

## Commissioning process

| Stage | Description |
|---|---|
| 1 | Validate the device wiring to the description in the Product Installation and Wiring section. See Product installation and wiring, page 91.<br><br>**NOTE:** Make sure that the exclusion logic is implemented in the PLC or the control circuit to ensure a correct insulation alarm detection. |
| 2 | Validate the device settings to the description in the Product Setup. See Safety standards compliance requirements, page 90.<br><br>**NOTE:** Make sure that the exclusion logic is implemented in the PLC or the control circuit to ensure a correct insulation alarm detection. |
| 3 | Validate the insulation monitoring with exclusion management. |

# Insulation monitoring and insulation fault detection testing

1. When the device is powered off, make sure that inputs of the PLC or the control circuit as per the product installation and wiring section. See Safety standards compliance requirements, page 90.
2. Connect a resistor between the monitored network and the earth and check the measurement:
   - When the resistor value is alarm threshold +20%, no alarm is generated.
   - When the resistor value is alarm threshold -20%, an alarm is generated.

   **NOTE:** This test must be done offline and install under test disconnected from system.
3. Check that the alarm relay toggles according to the resistance used for the test.

# Specifications

This section provides additional specifications for your device and accessories.

The information contained in this section is subject to change without notice. You can download updated documentation from www.se.com or contact your local Schneider Electric representative for the latest updates.

See your device's installation sheet for specifications related to installation, such as measured current and voltage ranges, inputs/outputs and control power information.

## System type to be monitored

| | | |
|---|---|---|
| AC or combined AC/DC ungrounded [25] power systems | Phase-to-phase voltage with device connected to neutral | ≤ 830 V AC [25], [26] or<br>≤ 1700 V AC [27]<br>≤ 1500 V AC [28] |
| | With device connected to phase | ≤ 480 V AC [25], [26] or<br>≤ 1000 V AC [27]<br>≤ 2600 V AC [28] |
| | Frequency (AC power system) | 45...440 Hz |
| AC | Phase-to-phase voltage with device connected to neutral | ≤ 33k V AC [29] |
| DC or rectified IT power systems | – | ≤ 480 V DC [25], [26] or<br>≤ 1200 V DC [30]<br>≤ 1500 V DC [28] |

## Electrical characteristics

| | | |
|---|---|---|
| Range for insulation resistance readings | | 10 Ω...10 MΩ |
| Range for capacitance readings | | 0.01...500 µF<br>(2000 µF for photovoltaic applications with IM400-1700 voltage adaptor)<br>(5500 µF for photovoltaic applications with IM400VA2 voltage adaptor) |
| Fault notification | Number of thresholds | 2 (password protected) |
| | Preventive insulation alarm threshold | 1 kΩ...1 MΩ |
| | Insulation alarm threshold | 0.04...500 kΩ |
| Insulation alarm threshold and preventive insulation alarm hysteresis | | 20% |
| Response time | | Less than or equal to the **Filtering** setting: 4s / 40s / 160s |
| Device operating test | | Auto-testing and manual testing |
| Internal impedance | | 40 kΩ (at 50/60/400 Hz) |
| Internal resistance Ri of the measuring circuit | | 40 kΩ |
| Output contact | Number | 2 (standard or failsafe) |
| | Type of contact | SPDT one changeover contact |
| | Operating principle | N/O N/C operation |

25. When the insulation monitoring device is linked to a non-insulated variable speed drive, the DC value and not the AC value must be used as the limit.
26. Direct connection of the device to the system to be monitored.
27. Device used with IM400-1700 or PHT1000 voltage adaptor.
28. Device used with IM400VA2 voltage adaptor.
29. IM400THR and IM400LTHR used with P1N ground adaptor and compatible Schneider Electric voltage transformer.
30. 1000 V DC with IM400-1700 and 1200 V DC with PHT1000.

## Electrical characteristics (Continued)

| | | |
|---|---|---|
| | Electrical endurance | 30000 cycles |
| | Breaking capacity | 3 A @ 250 V AC<br>1 A, 10 mA minimum load @ 48 V DC |
| | Minimum switching load | 2 mA @ 24 V AC/DC |
| Injection inhibition input (voltage supplied by device) | Voltage supplied | 24 V DC |
| | Current | 5 mA |
| Notification time delay | | 0...7200 s |
| Auxiliary power supply voltage | | IM400, IM400C, and IM400THR:<br>• 100...300V LN/440V LL AC ±15%, 50...400 Hz<br>• 100...440 V DC ±15%<br>IM400L and IM400LTHR: 24...48 V DC ±15% |
| Burden | | IM400, IM400C, and IM400THR: 25 VA / 10 W<br>IM400L and IM400LTHR: 10 W |
| Measurement voltage | | IM400, IM400C, and IM400L: 15 Vp, 33 Vp, 120 Vp<br>IM400THR and IM400LTHR: 20 Vdc, 40 Vdc, 60 Vdc, 80 Vdc |
| Measurement current | | IM400, IM400C, and IM400L: 375 µAp, 825 µAp, 3 mAp<br>IM400THR and IM400LTHR: 469 µAdc, 940 µAdc, 1.56 mAdc, 2.48 mAdc |
| Fault locating current (IM400, IM400C, and IM400THR) | | 3.75 mAp |
| Extraneous DC voltage Ufg | | 506 V |
| Dielectric withstand | | 4000 V AC / 5500 V DC 7.3 kV impulse |

## Mechanical characteristics

| | |
|---|---|
| Weight | 0.75 kg (1.65 lb) |
| Mounting methods | Flush mount or on grid |
| IP degree of protection | IP54 (front), IP20 (back) |
| Mounting position | Vertical |

## Environmental characteristics

| | |
|---|---|
| Operating temperature | • -25...+55°C<br>• -25...+65°C [31]<br>• -25...+70°C [32] |
| Storage temperature | -40...+70°C |
| Climatic conditions [33] | IEC 60068 |
| Location | For indoor use only |

31. With IM400-1700 voltage adaptor and 230 V ±15 % auxiliary supply
32. With IM400VA2 voltage adaptor and 230 V ±15 % auxiliary supply
33. The device is suitable for use in all climates:
    - Damp, equipment not operating (IEC 60068-2-30)
    - Damp heat, equipment operating (IEC 60068-2-56)
    - Salt mist (IEC 60068-2-52)

## Environmental characteristics (Continued)

| | |
|---|---|
| Altitude | For IM400, IM400C, and IM400THR<br>• ≤ 3000 m (9843 ft) [34]<br>• ≤ 4000 m (13123 ft) [35]<br>For IM400L and IM400LTHR: ≤ 3000 m (9843 ft) |
| Pollution degree | 2 |

## Other

| | | |
|---|---|---|
| Overvoltage category | | 300 V / OVCIII, 600 V / OVCII |
| Standards | Product | IEC 61557-8 |
| | Safety | UL 61010-1, CSA C22.2 No. 61010-1-12 |
| | Installation | IEC 60364-4-41 |
| | Output contact | IEC 61810-2 |

34. 480 V AC/DC monitored system, CAT III, 440 V AC/DC auxiliary supply
35. 480 V AC/DC monitored system, CAT III, < 150 V AC/DC auxiliary supply

# China Standard Compliance

This product complies with the following standard(s) in China:

| |
|---|
| BS/ EN/ IEC 61557-8 Electrical safety in low voltage distribution systems up to 1 000 V a.c. and 1 500 V d.c. - Equipment for testing, measuring or monitoring of protective measures - Part 8: Insulation monitoring devices for IT systems |

Schneider Electric
35 rue Joseph Monier
92500 Rueil Malmaison
France

+ 33 (0) 1 41 29 70 00

www.se.com

As standards, specifications, and design change from time to time, please ask for confirmation of the information given in this publication.

© 2019 – 2024 Schneider Electric. All rights reserved.

7EN02-0493-00