SeT Series

MCSeT

Digitally Native up to 24 kV
Air-insulated Switchgear
With EvoPacT HVX Vacuum Circuit Breaker

Installation Guide

BQT6904400-04
05/2026



Schneider Electric

www.se.com

Legal Information

The information provided in this document contains general descriptions, technical characteristics and/or recommendations related to products/solutions.

This document is not intended as a substitute for a detailed study or operational and site-specific development or schematic plan. It is not to be used for determining suitability or reliability of the products/solutions for specific user applications. It is the duty of any such user to perform or have any professional expert of its choice (integrator, specifier or the like perform the appropriate and comprehensive risk analysis, evaluation and testing of the products/solutions with respect to the relevant specific application or use thereof.

The Schneider Electric brand and any trademarks of Schneider Electric SE and its subsidiaries referred to in this document are the property of Schneider Electric SE or its subsidiaries. All other brands may be trademarks of their respective owner.

This document and its content are protected under applicable copyright laws and provided for informative use only. No part of this document may be reproduced or transmitted in any form or by any means (electronic, mechanical, photocopying, recording, or otherwise, for any purpose, without the prior written permission of Schneider Electric.

Schneider Electric does not grant any right or license for commercial use of the document or its content, except for a non-exclusive and personal license to consult it on an "as is" basis.

Schneider Electric reserves the right to make changes or updates with respect to or in the content of this document or the format thereof, at any time without notice.

To the extent permitted by applicable law, no responsibility or liability is assumed by Schneider Electric and its subsidiaries for any errors or omissions in the informational content of this document, as well as any non-intended use or misuse of the content thereof.

SeT Series

Featuring outstanding medium-voltage (MV) and low-voltage (LV) switchboards, motor control centres and power distribution solutions for high-performance power applications, Schneider Electric's SeT Series is optimized solutions based on high levels of safety and an optimised footprint. Built on a modular architecture and incorporating smart connected devices for maximum safety, reliability, performance and energy efficiency, the SeT Series is delivered to customers directly from our Schneider Electric plants or via a global network of licensed partner panel builders, who are trained and audited to provide quality equipment and support.

Table of Contents

Table of Contents 3
Safety Information 5
- Safety Precautions 6

About the Document 7
Safety Provisions 10
General 12
- Recommendations 12
  - Installation above the Switchboard 12
  - Equipment Marking 12
  - Disposal After the End of the Useful Life 12
- Standard Tightening Torques 13
- Required Tools (Not Included in the Scope of Supplies) 14
- List of Bags and Accessories 15

Dimensions and Weights 16
- Feeder with Contactor Cubicle (FC) 16
- Incomer-Feeder (I/F) Cubicle 17
- Bus Section Coupler (BSC) - Bus Section Riser (BSR) Cubicles 18
- Busbar Metering and Earthing (BME) Cubicle 20
- Cubicle Fitted with Roofs 21
- MCSeT Cubicle Ratings 23
- Rating Plate 25
- Control Symbols 26
  - Control Symbols of E/S 26
  - Control Symbols of VCB 26

Handling Instructions 27
- Land Packaging of Cubicle 28
- Packaging for Maritime Expedition (Shipping) 28
- Transport with Forklift Truck 29
- Unpacking Cubicles 31
- Transport of the Cubicles/VCB on the Construction Site 32
  - Transport of the Cubicle with Crane 32
  - Transport of the VCB 34
- Placing Cubicle in a Switchgear Room 35
- Storage 36

Installation and Operation Recommendation 38
- Aging 38
- Operation and Maintenance 38

Installation Instructions 40
- Safety Provisions 40
- Important Information for Assembly 40
- Requirements of the Switchgear Room 41
- Floor Finishing 43
  - Surface Condition 43
  - Floor Quality 43
  - Ground Plan of a MCSeT Switchgear within a Switchgear Room 43
  - Detailed View of Bottom Plates 44

Fastening of the Cubicles 47
Coupling of Cubicles 51
Rack-In Check 53
Installing the Main Earth Connection 54
Switchboard to the Buildings Earth 54
Inter-Cubicle Earth Connection (MCSeT-MCSeT) 55
Installing the Electric Connections of the Busbars and MV Cables 56
Installing Busbars 56
Placing MV Cables on I/F Cubicle 87
General Information 87
Preparation of Cable Compartment 87
Mount Sealing End and Cable Lug 88
Placing MV Cables on Feeder with Contactor Cubicle 90
Preparation of Cable Compartment 90
Assembly of the Cable Pan 98
Cable Connection System 105
Cable Termination Height 105
Installation of the Connecting Busbar for 24 kV 107
LV Connection 109
Installing the Voltage Transformers 111
Fixed VT 111
Withdrawable VT Operation for 24 kV 112
Installing the Current Transformers 117
Installing the Surge Arresters 119
Assembly of the Pressure Relief Duct 120
Internal Exhaust Tunnel 120
External Exhaust Tunnel 146
Installing the End Cover 159
Installation of Top Busbar Entry End Cover 161
Installing the Rear Cover 163
Pre-Commissioning Checklist for MCSeT Switchgear 166
Inspection and Test 168
Power Frequency Dielectric Test (Optional) 168
Cable Test after Assembly (Optional) 168
Preparation 168
Performing the Cable Test 169
Glossary 171

Safety Information

Important Information

Read these instructions carefully, and look at the equipment to become familiar with the device before trying to install, operate, service, or maintain it. The following special messages may appear throughout this documentation or on the equipment to warn of potential hazards or to call attention to information that clarifies or simplifies a procedure.



The addition of this symbol to a “Danger” or “Warning” safety label indicates that an electrical hazard exists which will result in personal injury if the instructions are not followed.



This is the safety alert symbol. It is used to alert you to potential personal injury hazards. Obey all safety messages that follow this symbol to avoid possible injury or death.

⚠ DANGER

DANGER indicates a hazardous situation which, if not avoided, **will result in** death or serious injury.

⚠ WARNING

WARNING indicates a hazardous situation which, if not avoided, **could result in** death or serious injury.

⚠ CAUTION

CAUTION indicates a hazardous situation which, if not avoided, **could result** in minor or moderate injury.

NOTICE

NOTICE is used to address practices not related to physical injury.

Please Note

Electrical equipment should be installed, operated, serviced, and maintained only by qualified personnel. No responsibility is assumed by Schneider Electric for any consequences arising out of the use of this material.

A qualified person is one who has skills and knowledge related to the construction and operation of electrical equipment and its installation, and has received safety training to recognize and avoid the hazards involved.

Safety Precautions

Safety Rules

⚠⚠DANGER

HAZARD OF ELECTRIC SHOCK, EXPLOSION, OR ARC FLASH

- Apply appropriate Personal Protective Equipment (PPE) and follow safe electrical work practices. See standards or local equivalent.
- This EvoPacT HVX Vacuum Circuit Breaker (VCB) and the MCSeT equipment must only be installed and serviced by qualified electrical personnel.
- Perform work only after reading and understanding all of the instructions contained in this guide.
- Turn off all the power sources before working on or inside the equipment.
- Turn off or trip the VCB and discharge the mechanism.
- Always use a properly calibrated voltage sensing device to confirm power is off.
- Use only Schneider Electric specific tools (operating crank, extraction table, and so on).
- Check all devices, covers, and doors are in correct position before turning on the power.
- Beware of potential hazards and carefully inspect the work area for tools and objects that may have been left inside the equipment.
- Do not modify the mechanical or electrical parts.
- Do not bypass the interlocks before operation.
- Do not operate with protective barriers removed.

Failure to follow these instructions will result in death or serious injury.

NOTICE

HAZARD OF INAPPROPRIATE HANDLING AND STORING UNDER INADEQUATE CONDITIONS

- Comply with the handling rules and avoid causing any shocks to the device.
- If the equipment is stored before its final installation, observe the storage conditions.

Failure to follow these instructions can result in equipment damage.

Cleaning Instructions

⚠⚠DANGER

HAZARD OF ELECTRIC SHOCK, EXPLOSION, OR ARC FLASH

- Do not use solvents or alcohol for cleaning the equipment.
- Do not use high-pressure cleaner for cleaning the equipment.

Failure to follow these instructions will result in death or serious injury.

About the Document

Document Scope

This installation guide describes about air-insulated MV switchgear units of the MCSeT.

- This guide is meant for qualified person who will install MCSeT equipment: panel builder, installer or end user.
- This installation guide cannot be used to define or check the devices compatibility with every single users application, nor its reliability within it. It is the duty of every user or panel builder to perform a complete risk analysis, evaluation and testing of the products in specific applications in accordance with applicable standards.
- In order to help ensure the right functioning of the device installed in the equipment, refer to the equipment manufacturer documentation.
- When the products are used in applications with specific technical and safety rules, must follow the integration and protection rules for the specific application.

All dimensions not specified in detail are in millimeters.

Validity Note

This guide is valid only for MCSeT cubicle. The design provides easy rack-in/rack-out operation without the need for a separate trolley. This MCSeT cubicle is an extension of the MCSeT range and delivers performances up to 24 kV, equipped with EvoPacT HVX VCB and CVX Contactor. It also has other functional trolley like the EvoPacT Metering Truck (MTX).

For product compliance and environmental information (RoHS, REACH, PEP, EOLI, and so on), go to the Green Premium page on the Schneider Electric website.

The information contained in this guide is likely to be updated at any time. Schneider Electric strongly recommends that you have the most recent and up-to-date version available on https://www.se.com/ww/en/download.

The technical characteristics of the devices described in this guide also appear online. To access the information online, go to the Schneider Electric home page at www.se.com.

Product Related Information

Air-insulated MV switchgear units of the MCSeT series are designed exclusively for switching and distributing electrical power.

⚠⚠DANGER

HAZARD OF ELECTRIC SHOCK, EXPLOSION, OR ARC FLASH

The MCSeT switchgear must be used only in scope of specified standards and specific technical data.

Failure to follow these instructions will result in death or serious injury.

General Cybersecurity Information

In recent years, the growing number of networked machines and production plants has seen a corresponding increase in the potential for cyber threats, such as unauthorized access, data breaches, and operational disruptions. You must, therefore, consider all possible cybersecurity measures to help protect assets and systems against such threats.

To help keep your Schneider Electric products secure and protected, it is in your best interest to implement the cybersecurity best practices as described in the Cybersecurity Best Practices document.

Schneider Electric provides additional information and assistance:

- Subscribe to the Schneider Electric security newsletter.
- Visit the Cybersecurity Support Portal web page to:
  - Find Security Notifications.
  - Report vulnerabilities and incidents.
- Visit the Schneider Electric Cybersecurity and Data Protection Posture web page to:
  - Access the cybersecurity posture.
  - Learn more about cybersecurity in the cybersecurity academy.
  - Explore the cybersecurity services from Schneider Electric.

Related Documents

The following additional documents must be complied with:

- Purchase agreement with the stipulations regarding the switchgear-specific equipment and the legal details.
- The appropriate switchgear-specific circuit diagrams/documentation.
- The operating manuals of the LV devices installed in the switchgear (for example, voltage presence detecting systems and devices in LV cabinet).
- The assembly drawings supplied with the equipment.
- The assembly instructions of the manufacturer of the cable connection systems to be connected to the switchgear.
- The operating instructions of the trucks being used.

Title of Document	Reference Number
EvoPacT HVX Catalog 2024 (IEC)	NRJCAT21051EN-IEC
User and Maintenance Guide	BQT6904800-00
Civil Engineering Guide	BQT8706400-00
Receipt Guide	BQT8677900-00

To find documents online, visit the Schneider Electric download center (www.se.com/ww/en/download/).

Information on Non-Inclusive or Insensitive Terminology

As a responsible, inclusive company, Schneider Electric is constantly updating its communications and products that contain non-inclusive or insensitive terminology. However, despite these efforts, our content may still contain terms that are deemed inappropriate by some customers.

Queries

For any questions, suggestions, or need of further information about this guide, contact Schneider Electric. For additional details, visit our website www.se.com.

For details of MCSeT switchgear expansion (either right or left side), it is recommended to contact Schneider Electric.

We always strive to provide you with the best-possible information for optimum, safe use of our products. Contact Schneider Electric if you have any recommendations, amendments, or proposals for improvement.

Safety Provisions

Before performing work on the cubicle, it is essential that you comply with the following instructions:

⚠⚠DANGER

HAZARD OF ELECTRIC SHOCK, EXPLOSION, OR ARC FLASH

Before removing covers and performing assembly or maintenance work:

- Ensure that the system is isolated from high voltage, supply voltage, and properly grounded.
- Ensure that the VCB is in test condition, the E/S is closed, and access is locked.
- Follow the Lock Out Tag Out (LOTO) process to perform any work on switchboard.
- Install barriers, cables, and polycarbonates in accordance with the design specifications wherever necessary.

Failure to follow these instructions will result in death or serious injury.

⚠WARNING

HAZARD OF MOVABLE PARTS IN MECHANICAL DRIVES

Before performing mounting and maintenance work, comply with the below safety rules:

- Isolate from the supply voltage.
- Release the energy-storing device of the VCB by performing the OFF-ON-OFF operation.
- Activate the make-proof E/S to ON position, to ensure that the equipment is ready for use (if any).
- Do not remove the mechanisms during maintenance work.

Failure to follow these instructions can result in death, serious injury, or equipment damage.

⚠WARNING

HAZARD OF SHARP-EDGED SHEET METAL AND METAL PARTS

During installation and maintenance work, comply with the below safety rules:

- Apply appropriate Personal Protective Equipment (PPE) and follow safe electrical work practices. See standards or local equivalent.
- Always cover sharp edges.

Failure to follow these instructions can result in death, serious injury, or equipment damage.

⚠CAUTION

HAZARD OF INADEQUATE STORING, INSTALLATION, AND USE CONDITIONS

- Respect the handling rules and avoid any shocks to the device.
- Observe the normal service conditions described in this guide.
- Before the VCB is installed in its final location, ensure that the storage conditions for the MCSeT equipment and the VCB are complied.

Failure to follow these instructions can result in injury or equipment damage.

Applicable Standards and Regulations

The applicable standards and regulations are as follows:

- Metal-enclosed AC switchgear for rated voltages > 1 kV up to including 52 kV: IEC 62271-200, Common specification: IEC 62271-1.
- The locally applicable accident prevention, operating and work instructions should be complied.
- Assembly and maintenance: IEC 61936-1.
- Operation of electrical equipment: EN 50110-1.
- Loss of service continuity category according to IEC 62271-200: LSC 2B-PM.
- Type-tested.
- Tested for internal arc faults (qualification IAC AFLR).
- Dimensioned for indoor installation.

  NOTE:

  - The national standards applicable in the country where the equipment is to be installed must be complied.
  - Other standards or regulations have to be checked and accessed locally.

General

Recommendations

Installation above the Switchboard

⚠⚠ DANGER

HAZARD OF ELECTRIC SHOCK, EXPLOSION OR ARC FLASH

Refrain from Installation of equipment such as lamps, air conditioner ducts, cable trays, structural beams, or other objects above the switchboard. Refer to *Civil Engineering Guide* (BQT8706400).

Failure to follow these instructions will result in death or serious injury.

Equipment Marking

⚠⚠ DANGER



HAZARD OF ELECTRIC SHOCK, EXPLOSION, OR ARC FLASH

It is strictly forbidden to walk on the parts with this label.

Failure to follow these instructions will result in death or serious injury.

⚠⚠ DANGER



HAZARD OF ELECTRIC SHOCK, EXPLOSION, OR ARC FLASH

It is strictly forbidden to remove the parts with this label when the equipment is energized.

Failure to follow these instructions will result in death or serious injury.

⚠ WARNING



HAZARD OF FALLING

- Do not walk upon the topsides of the switchgear cubicles.
- When working on the top of the switchgear cubicles (such as during the the installation of deflectors, fans, or pressure relief ducts), temporarily attach a sturdy base plate that is walkable.

Failure to follow these instructions can result in death, serious injury, or equipment damage.

Disposal After the End of the Useful Life

A material and recycling data sheet can be provided on request for the disposal of MCSeT switchgear at the end of its service life.

Disposal is performed as a service by Schneider Electric service center which is subjected to payment.

Standard Tightening Torques

⚠CAUTION

HAZARD OF INAPPROPRIATE ASSEMBLY

It is recommended to utilize these torque values for the installations that are covered in this guide. Refer to Table 1, page 13.

Failure to follow these instructions can result in injury or equipment damage.

The elastic washers placed on the external sides of the connections and busbars help ensure for distribution of stress induced by the screw torque.

Table 1 Recommended Tightening Torques for Screw Connection

Threads	Plastics	Threaded welding pin	Insert nut for insulation	Main circuit	Secondary connection	General connection
M3	0.1	–	–	–	0.7	1.1
M4	0.25	–	–	–	1.5	2.6
M5	0.5	–	3.5	–	2.5	5.0
M6	0.8	6.5	6.5	6.5	3.5	8.8
M8	1.8	15.0	15.0	17.0	–	21.0
M10	3.5	27.0	32.0	35.0	–	42.0
M12	6.0	–	45.0	68.0	–	70.0
M16	12.0	–	110.0	135.0	–	170.0
M20	–	–	220.0	–	–	330.0

The main circuit includes the below fastenings:

- Copper busbar connections and fastening bolts.
- Cable fastening bolts.
- Fastening bolts for contact.
- E/S and load-break switch, bolts for connection with the busbar.
- For CT and VT torque values, refer to instruction sheet.

Required Tools (Not Included in the Scope of Supplies)

Table 2 Required Tools

Required tool	Image
Cutter	
Nail puller	
Open-ended spanners	
Approved torque wrenches with different bits for hexagon socket screws and socket-head screws and nuts; bits for screw and nut grades M5, M6, M8, M10, M12	
Allen keys for hexagonal screws size	
Screwdriver and philips screwdriver	
Cutting pliers	
Four crane straps/chains of L ≥ 2000 mm	–
Lint-free, clean rags	–

List of Bags and Accessories

Table 3 List of Bags and Accessories

Package	Content
Switchboard end and fixing	• Switchboard end cover • Bag of screws and bolts
Switchboard	• Two cubicle operation cranks • 10 mm^2 wire • One earth fish plate and seal • Civil engineering guide • Installation guide • User and maintenance guide • Receipt guide
Civil engineering	• Dowel pin • Bag of screws and bolts
Exhaust	• Tunnel • Absorber (for internal exhaust only) • Bag of screws and bolts
Busbars	• Main busbar • Dropper • Busbar shim • Boots/shrouds • Busbar fastening
Trolley and accessories	• Trolley with six accessories

Dimensions and Weights

Feeder with Contactor Cubicle (FC)

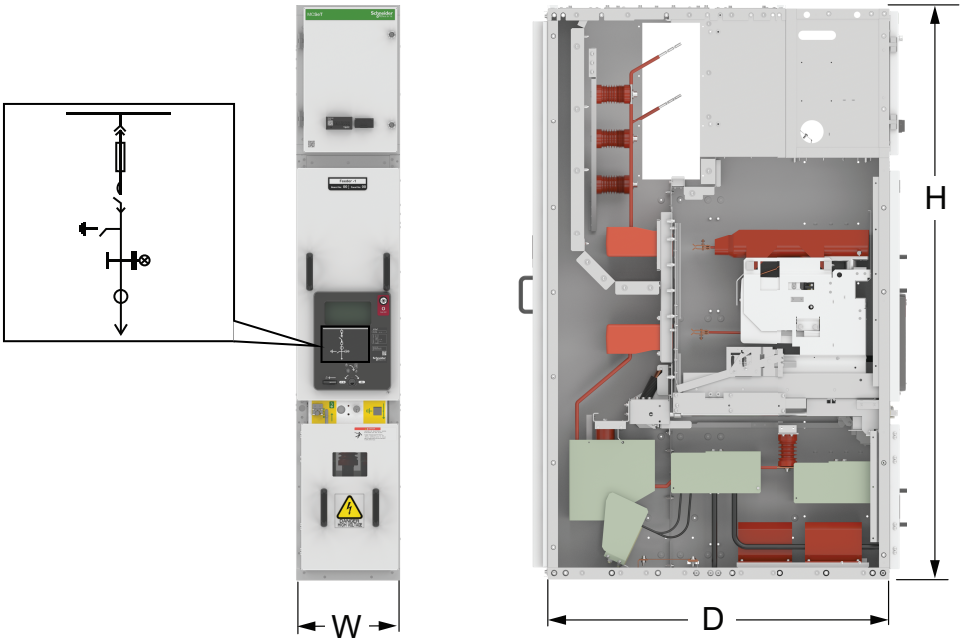

Figure 1
Feeder with Contactor (FC)

Table 4 Feeder with Contactor Cubicle Dimensions and Weights

Rated voltage (kV)	Dimensions	Rated current of cubicle (A)
		315
7.2/12	Width W (mm)	400
	Cubicle height H (mm)(1)	2240
	Depth D (mm)	1440
	Approximate weight (kg)(2)	800
	Approximate maximum weight (kg) of CT(3)	25

(1) This dimension excludes cable flanges as well as any compartments placed under the cubicle.

(2) Maximum fully fitted weight of the cubicle including CVX contactor.

(3) 3 CTs per set.

Incomer-Feeder (I/F) Cubicle

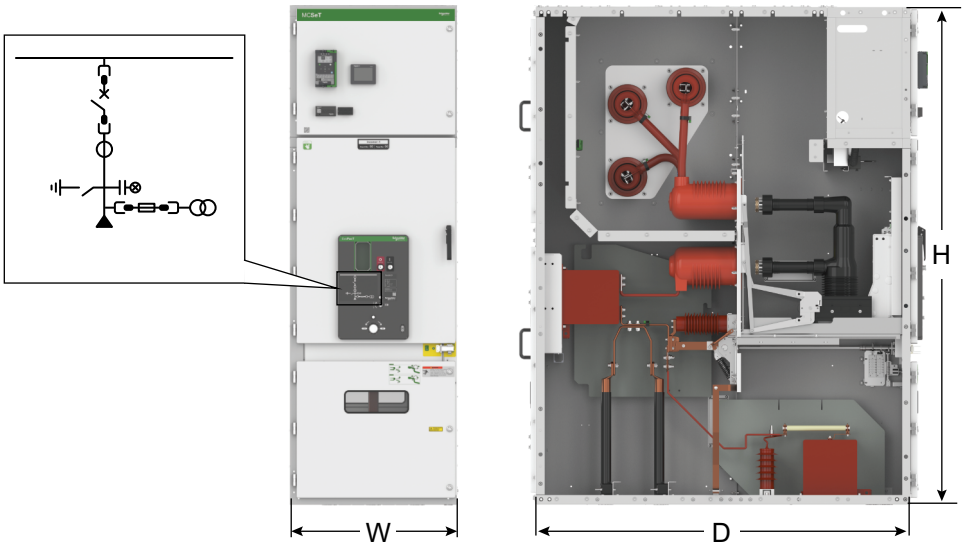

Figure 2
I/F Cubicle

NOTE: The images shown here are for illustration purpose only.

Table 5 I/F Cubicles Dimensions and Weights

Rated voltage (kV)	Dimensions	Rated current of cubicle (A)					
		630	1250	2000	2500	3150	4000(1)
12/17.5	Width W (mm)	650	650/800	800	1000	1000	1000
	Cubicle height H (mm)(2)	2240	2240	2240	2240	2240	2240
	Depth D (mm)	1440	1440	1440	1440	1440	1640
	Approximate weight (kg)(3)	800	800/920	920	1050	1050	1050
	Approximate maximum weight (kg) of CT(4)	25	25	25	25	36	36
	Approximate maximum weight (kg) of VT(5)	23	23	23	23	23	23
24	Width W (mm)	800	800	–	1000	1000	–
	Cubicle height H (mm)(2)	2400	2400	–	2400	2400	–
	Depth D (mm)	1860	1860	–	1860	1860	–
	Approximate weight (kg)(3)	700	700	–	910	910	–
	Approximate maximum weight (kg) of CT(4)	25	25	–	25	25	–
	Approximate maximum weight (kg) of VT(5)	40	40	–	40	40	–

(1) With forced cooling.

(2) This dimension excludes cable flanges as well as any compartments placed under the cubicle.

(3) Maximum fully fitted weight of the cubicle including VCB. For above 1250 A VCB will be dispatches separately. Details of the VCB weight are provided in the VCB catalog.

(4) 3 CTs per set.

(5) 3 VTs per set.

Bus Section Coupler (BSC) - Bus Section Riser (BSR) Cubicles

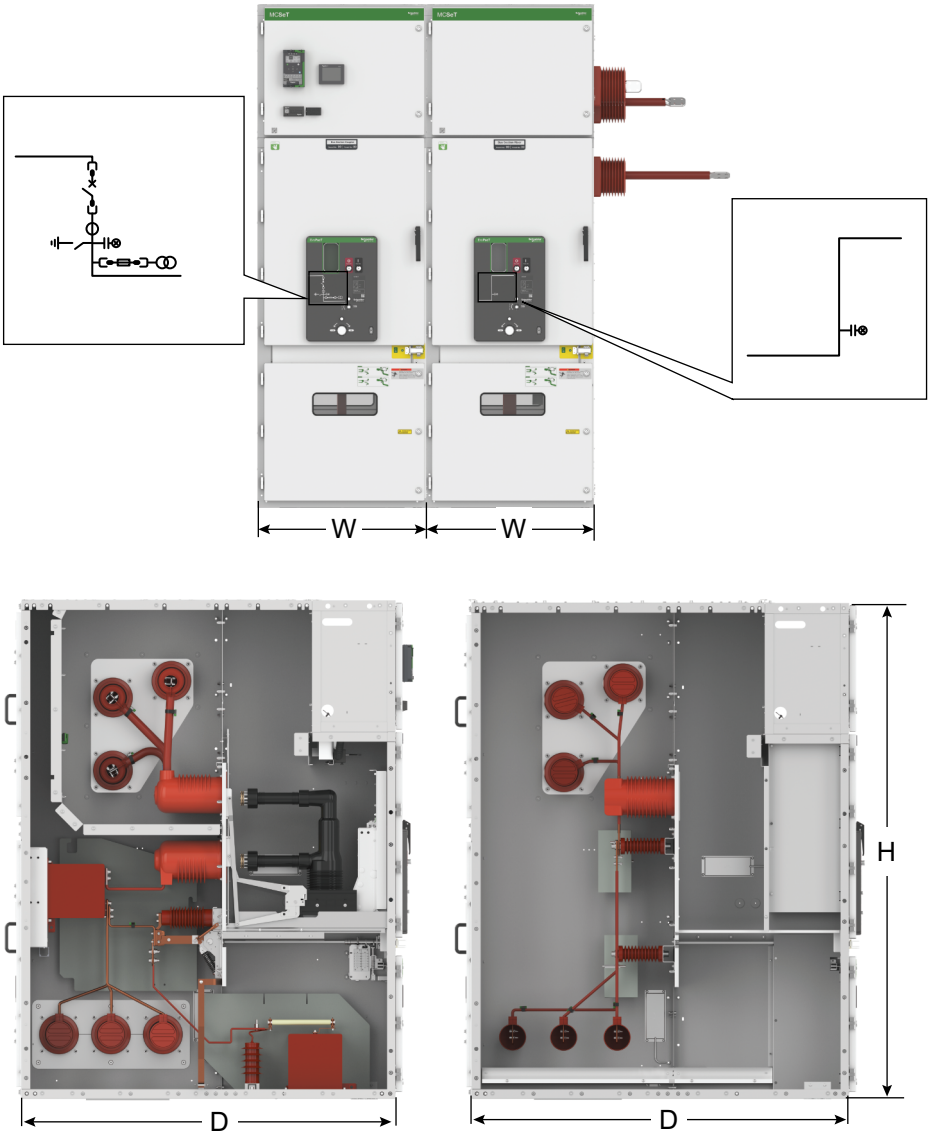

Figure 3
BSC-BSR Cubicles

NOTE: The images shown here are for illustration purpose only.

Table 6 BSC-BSR Cubicles Dimensions and Weights

Rated voltage (kV)	Dimensions	Rated current of cubicle (A)					
		630	**1250**	**2000**	**2500**	**3150**	**4000 (1)**
12/17.5	Width W (mm)	650	650/800	800	1000	1000	1000
	Cubicle height H (mm)(2)	2240	2240	2240	2240	2240	2240
	Depth D (mm)	1440	1440	1440	1440	1440	1640
	Approximate weight (kg) of BSC(3)	720	720/840	840	970	970	970
	Approximate weight (kg) of BSR(3)	480	480/630	630	750	750	750
	Approximate maximum weight (kg) of CT(4)	25	25	25	25	36	36
	Approximate maximum weight (kg) of VT(5)	23	23	23	23	23	23
24	Width W (mm)	800	800	–	1000	1000	–
	Cubicle height H (mm)(2)	2400	2400	–	2400	2400	–
	Depth D (mm)	1860	1860	–	1860	1860	–
	Approximate weight (kg) of BSC(3)	1120	1120	–	1440	1440	–
	Approximate weight (kg) of BSR(3)	730	730	–	960	960	–
	Approximate maximum weight (kg) of CT(4)	25	25	–	25	25	–
	Approximate maximum weight (kg) of VT(5)	40	40	–	40	40	–

(1) With forced cooling.

(2) This dimension excludes cable flanges as well as any compartments placed under the cubicle.

(3) Maximum fully fitted weight of the cubicle including VCB. For above 1250 A VCB will be dispatches separately. Details of the VCB weight are provided in the VCB catalog.

(4) 3 CTs per set.

(5) 3 VTs per set.

Busbar Metering and Earthing (BME) Cubicle

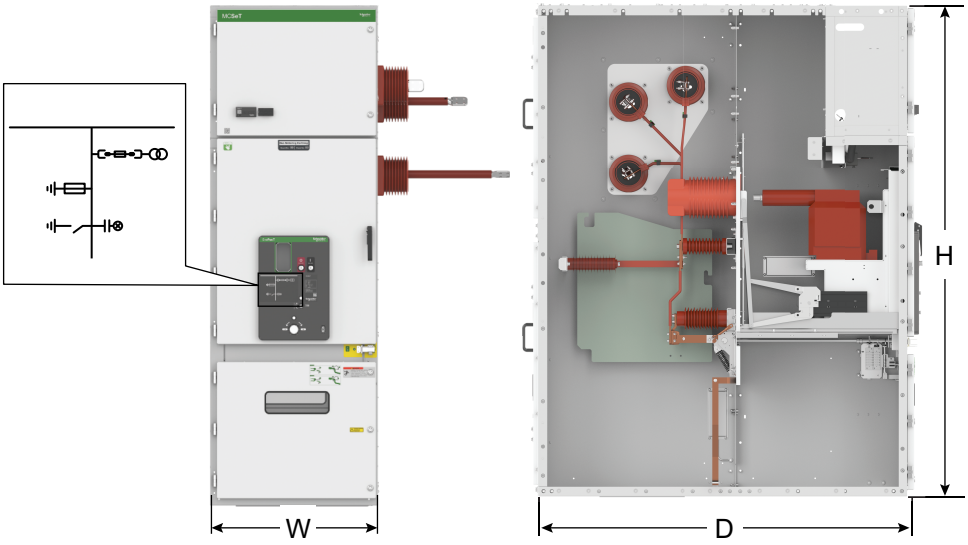

Figure 4
BME Cubicle

NOTE: The images shown here are for illustration purpose only.

Table 7 BME Cubicles Dimensions and Weights

Rated voltage (kV)	Dimensions	Rated current of cubicle (A)			
		630	**630**	**1250**	**1250**
12/17.5	Width W (mm)	650	800	650	800
	Cubicle height H (mm)(1)	2240	2240	2240	2240
	Depth D (mm)	1440	1440	1440	1440
	Approximate weight (kg)(2)	470	720	470	720
24	Width W (mm)	800	800	800	1000
	Cubicle height H (mm)(1)	2400	2400	2400	2400
	Depth D (mm)	1860	1860	1860	1860
	Approximate weight (kg)(2)	700	700	700	910

(1) This dimension excludes cable flanges as well as any compartments placed under the cubicle.

(2) Maximum fully fitted weight of cubicle without MTX.

Cubicle Fitted with Roofs

I/F Cubicle with Internal Exhaust

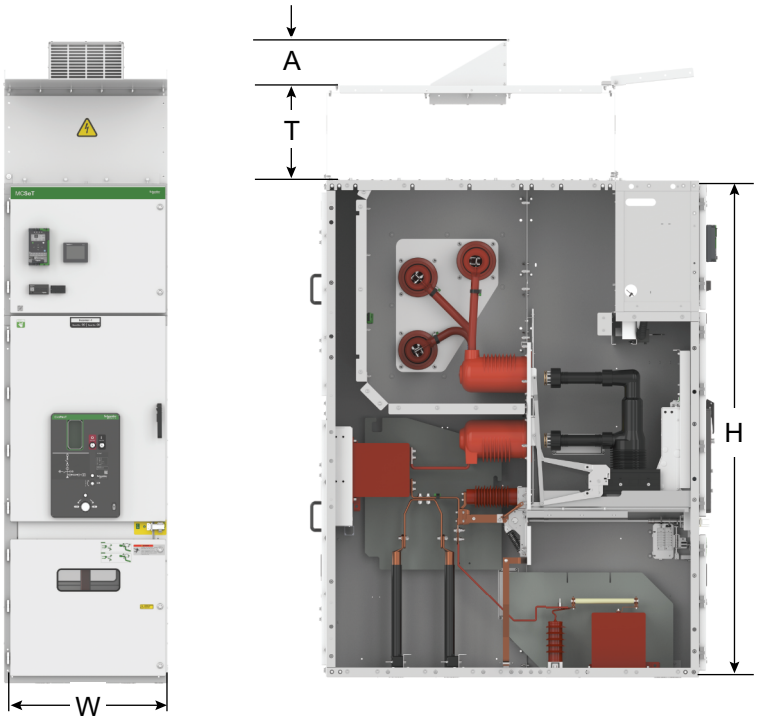

Figure 5
I/F Cubicle with Internal Exhaust

NOTE: The images shown here are for illustration purpose only.

Table 8 I/F Cubicles with Internal Exhaust

Rated voltage (kV)	Dimensions				
7.2/12/17.5	Width W (mm)	400	650	800	1000
	Height H (mm)	2240	2240	2240	2240
	Height of Tunnel T (mm)	473	473	473	473
	Height of the Absorber A (mm)	255	255	255	255
24	Width W (mm)	–	–	800	1000
	Height H (mm)	–	–	2400	2400
	Height of Tunnel T (mm)	–	–	420	420
	Height of the Absorber A (mm)	–	–	230	250

I/F Cubicle with External Exhaust

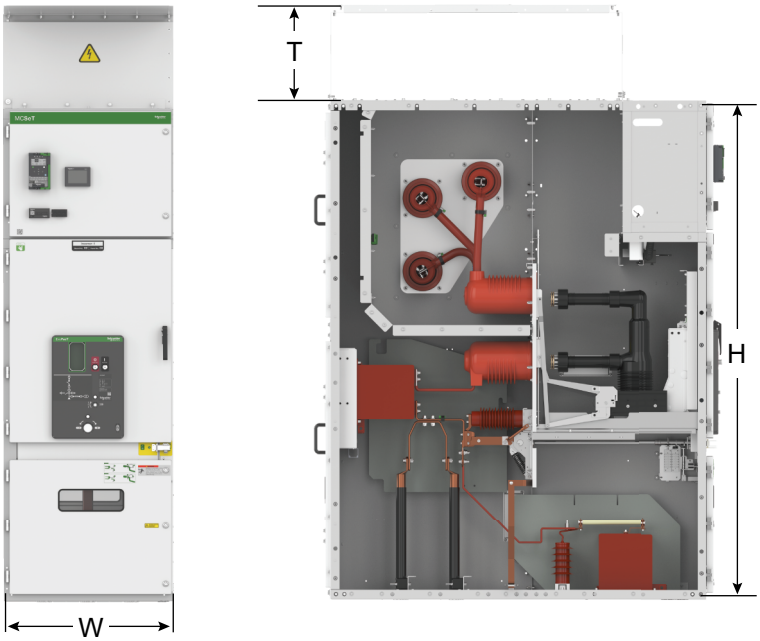

Figure 6
I/F Cubicle with External Exhaust

NOTE: The images shown here are for illustration purpose only.

Table 9 I/F Cubicles with External Exhaust

Rated voltage (kV)	Dimensions		
24	Width W (mm)	800	1000
	Height H (mm)	2400	2400
	Height of Tunnel T (mm)	419	419

MCSeT Cubicle Ratings

Table 10 MCSeT Cubicle Ratings

Rated voltage		**U_r**	**(kV)**	**up to 12**	**17.5**	**24**
Rated insulation level						
Power frequency withstand voltage 50 Hz - 1 min		U_d	(rms kV)	28	38	50
Rated frequency		F_r	(Hz)	50/60	50/60	50/60
Lightning impulse withstand voltage 1.2/50 µs		U_p	(kV peak)	75	95	125
Rated normal current and maximum short time withstand current(1)						
Functional unit with VCB						
Short time withstand current		I_k max.	Ik/tk (kA/3 s)	up to 40	up to 40	up to 31.5
Rated current	I_r max. busbar	I_r	(A)	up to 4000(2)	up to 4000(2)	up to 3150(2)
Rated current	I_r VCB	I_r	(A)	630	630	630
				1250	1250	1250
				2000	2000	2000
				2500	2500	2500
				3150	3150	3150(2)
				4000(2)	4000(2)	–
Degree of protection						
IP4X IP2X						

(1) For functional units equipped with circuit breakers, the breaking capacity is equal to the short time withstand current. In all cases, the device peak making capacity is equal to 2.5 times the short time withstand current for 50 Hz, and 2.6 times the short time withstand current for the 60 Hz.

(2) With forced cooling.

Table 11 Feeder with Contactor Cubicle Ratings

Rated voltage		**U_r**	**(kV)**	**7.2**	**12**
Rated insulation level					
Power frequency withstand voltage 50 Hz - 1 min		U_d	(rms kV)	20	28
Rated frequency		F_r	(Hz)	50/60	50/60
Lightning impulse withstand voltage 1.2/50 µs		U_p	(kV peak)	60	60(1)
Rated normal current and maximum short time withstand current					
Functional unit with CVX					
Short time withstand current		I_k max.	Ik/tk (kA/3 s)	40(2)	40(2)
Rated current	I_r max. busbar	I_r	(A)	up to 4000	up to 4000
Rated current	I_r CVX	I_r	(A)	315	270
Degree of protection					
IP4X(3) IP2X					

(1) Minimum limit as specified by IEC.

(2) Limited by fuse.

(3) IP41 and IP42 options are available.

Rating Plate

The type designation on the rating plate specifies the technical data for the cubicles. Refer to Figure 7.

To access this information, flash the QR code with smartphone or connected tablet; it will be directed to the website containing the data relating to the device.

When submitting enquiries to the manufacturer or ordering spare parts, the following information is required:

- Type designation
- Job number

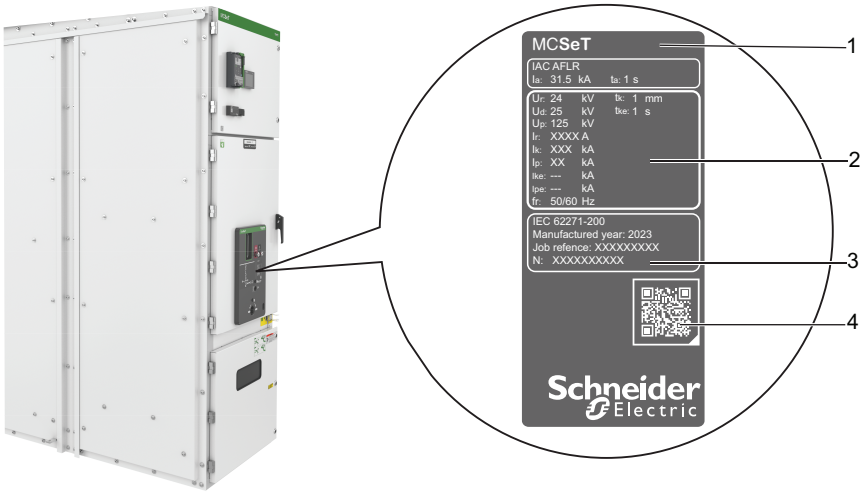

Figure 7
Example Shows Rating Plate on the Front Side of the I/F Cubicle

1	Type designation	3	Job number
2	Technical data	4	QR code with product information

NOTE: The images shown here are for illustration purpose only.

Control Symbols

Control Symbols of E/S

Table 12 Control Symbols of E/S

Description	Symbol	Description	Symbol
Operation position		Closed E/S mechanical indicator	
Open E/S mechanical indicator		Position can be locked using pad lock	

Control Symbols of VCB

Table 13 Control Symbols of Rack-In/Rack-Out

Description	Symbols
Manual operation instruction for rack-in/rack-out	
Connected/service position	
Disconnected/test position	

Table 14 Control Symbols of EvoPacT HVX VCB

Description	Symbol	Description	Symbol
ON push button		Spring discharged	
OFF push button		Operating counter	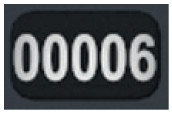
Spring charged and ready-to-close indicator		Position selector lockable with padlocking	
VCB OFF		VCB ON	

Handling Instructions

⚠WARNING

HAZARD OF EQUIPMENT TOPPLING

- Wear appropriate PPE.
- Handle the equipment with appropriate care as specified below.
- Keep the cubicle in vertical orientation while handling.

Failure to follow these instructions can result in death, serious injury, or equipment damage.

The transport and handling information of cubicle are as follows:

- The conditions and types of transport have been stipulated in the contract details.
- The type of packaging depends on the type of transport and the storage conditions.
- The cubicles are delivered individually and are fastened on pallets. The standard accessories are included.
- The transport trolley with accessories will be dispatched in a separate box.
- The VCB rated above 2500 A will be dispatched in a separate package.
- The cubicles are delivered in vertical position.
- The weight of the entire transport unit is indicated on the packaging.

Packaging

NOTICE

HAZARD OF INCORRECT HANDLING

- Competent operators must handle the lifting of the cubicle.
- It is recommended to use inspected cranes or forklifts for transportation.
- The lifting or handling of the cubicle from the loaded transportation vehicle should be done safely.
- Careful disassembly of the packaging is essential to help prevent damage to the cubicle.

Failure to follow these instructions can result in equipment damage.

The packaging for various modes of transportation are as follows:

- If packed exclusively for truck transport, the cubicles are delivered on a pallet with PE protective film (Figure 8).
- For sea transport, the units are packed in sealed aluminium foil with desiccant and in a closed wooden case with tightly closed wooden base (also for container transport, see Figure 9).
- In case of air transport, the cubicles are packed in wooden crates with a protective PE film hood (dust protection) or in wooden crates, also with closed wooden bases, however without protective hoods.

  NOTE: Observe the centre of gravity label to help ensure safe transport. You can find the label on the packaging and on the switchgear cubicle.

Land Packaging of Cubicle

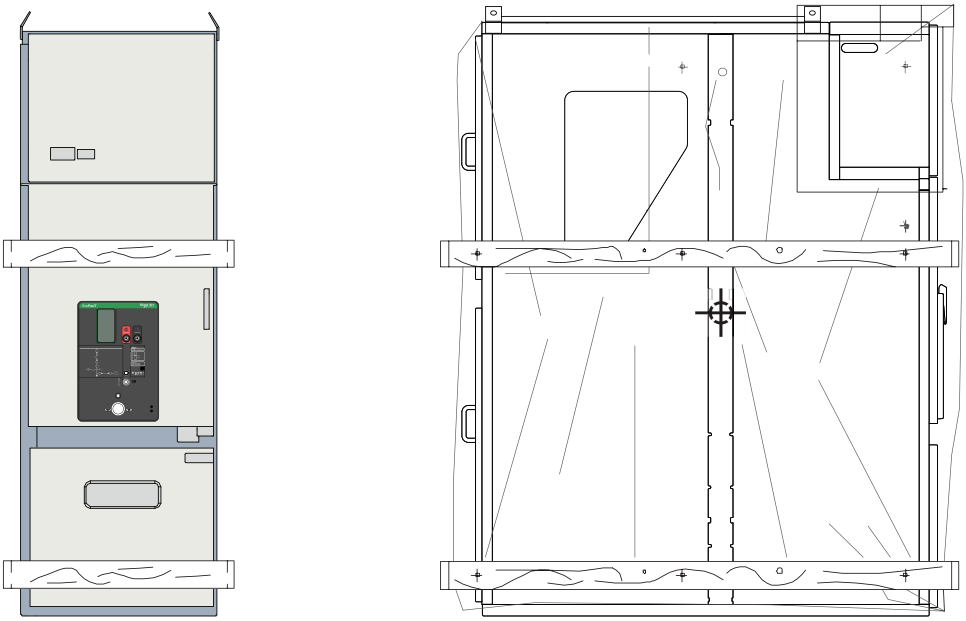

Figure 8
Cubicle with Land Packing

Packaging for Maritime Expedition (Shipping)

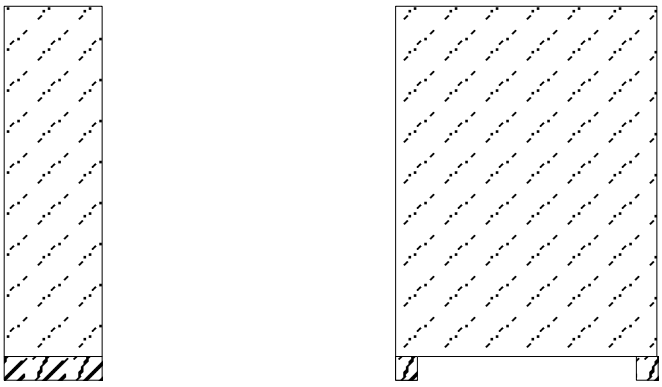

Figure 9
Cubicle with Packaging of Maritime Expedition

Transport with Forklift Truck

⚠WARNING

HAZARD OF TOPPLING

- When transporting the switchgear, ensure that the units do not tilt or tip.
- Nail down transport pallets to the loading surface.
- For transporting the trucks, comply with the transport specifications in the appropriate manuals.

Failure to follow these instructions can result in death, serious injury, or equipment damage.

⚠CAUTION

HAZARD OF EQUIPMENT TOPPLING

- For transport, the cubicles must be packaged completely.
- The entire length of the forks must be placed under the transport unit.

Failure to follow these instructions can result in injury or equipment damage.

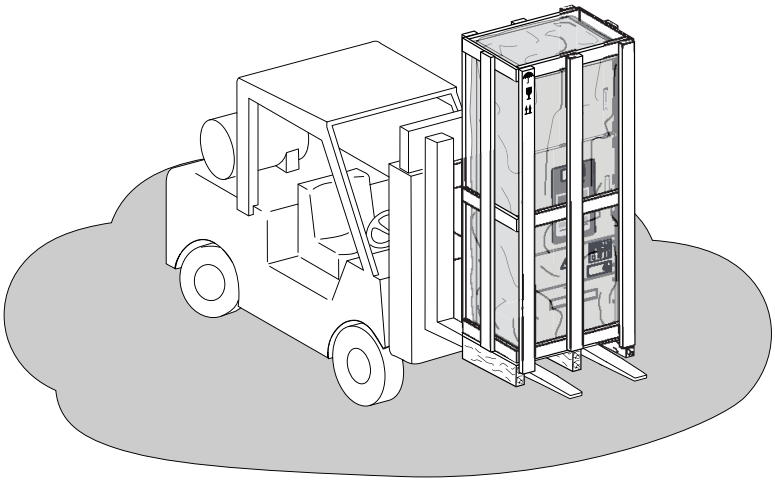

Figure 10
Transport with Forklift Truck

Delivery

Shipping units must be checked upon receipt. Any damage which may have occurred in transit must be recorded and reported to the manufacturer immediately.

NOTICE
HAZARD OF INCORRECT HANDLING • Competent operators must handle the lifting of the cubicle. • It is recommended to use inspected cranes or forklifts for transportation. • The lifting or handling of the cubicle from the loaded transportation vehicle should be done safely. • Careful disassembly of the packaging is essential to help prevent damage to the cubicle. **Failure to follow these instructions can result in equipment damage.**

NOTE:

- Check completeness of consignment based on the transport documents.
- The supplier must be notified in writing without delay about any deviations.

Unpacking Cubicles

NOTICE
HAZARD OF INAPPROPRIATE HANDLING To avoid any damage to the front cubicle components of the functional unit, keep the protection foam in place until the switchboard is in the operation phase. **Failure to follow these instructions can result in equipment damage.**

NOTE: The preparation of cubicles must be carried out only on the premises where they will be installed.

Follow the below steps to unpack the cubicle:

1. Unpack the functional unit by removing the wooden columns (3), then the plastic cover (2).
2. Remove the cubicle packaging.
3. Remove the lifting brackets (1).

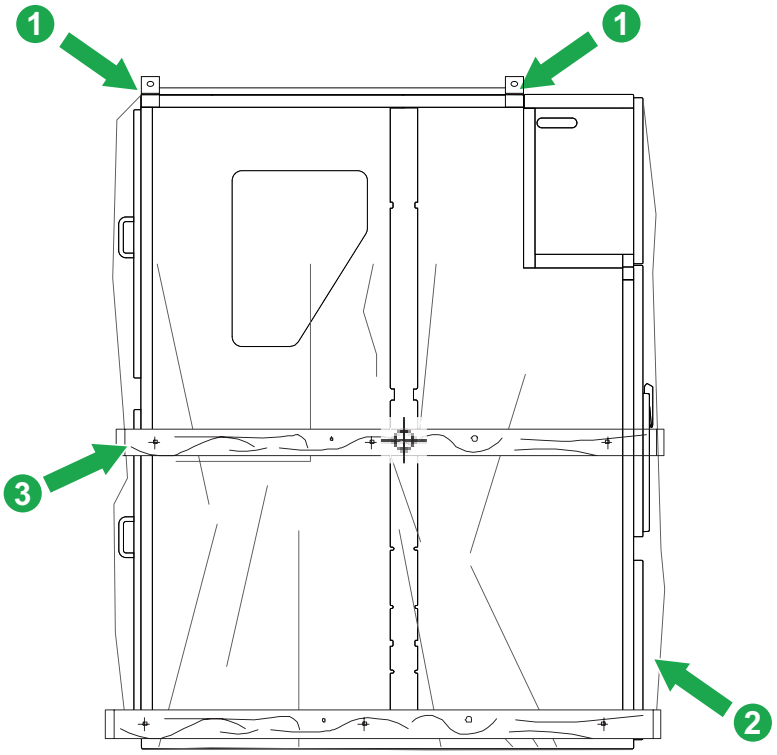

Figure 11
Unpacking of Cubicle

1	Lifting brackets
2	Plastic cover
3	Wooden columns

Transport of the Cubicles/VCB on the Construction Site

⚠WARNING

HAZARD OF TOPPLING

- Ensure the ropes or chains are strong enough to bear the weight of the cubicle and the trucks.
- Comply with the relevant provisions for hoisting equipment.
- On lowering the cubicles and the trucks, ensure that the supporting platform is sufficiently stable and even.

Failure to follow these instructions can result in death, serious injury, or equipment damage.

⚠WARNING

HAZARD OF FALLING

Watch out for floor openings in the switchgear room.

Failure to follow these instructions can result in death, serious injury, or equipment damage.

Transport of the Cubicle with Crane

⚠CAUTION

HAZARD OF INCORRECT HANDLING

- Make sure to utilize the lifting bracket when handling the MCSeT switchgear and ensure that lifting bracket is properly secured with fasteners.
- Make sure the lifting bracket is installed on the cubicle at the site when it is supplied separately.
- Adhere to the specified height for lifting and follow the recommended lifting procedures.
- Refrain swing area of the cubicle when lowering or raising it into position.

Failure to follow these instructions can result in injury or equipment damage.

Follow the below steps to transport the cubicles using crane:

1. Attach four crane ropes/chains (observe minimum carrying capacity and length). Lift the cubicle carefully.

   NOTE:

   - Lifting cables should be firmly secured before lifting. Good practices of the lifting should be followed.
2. Release the screw-fastenings between the lateral fixing brackets (1) on the pallet (2) and the cubicle.
3. Place the cubicle carefully on the floor at the intended site of installation.

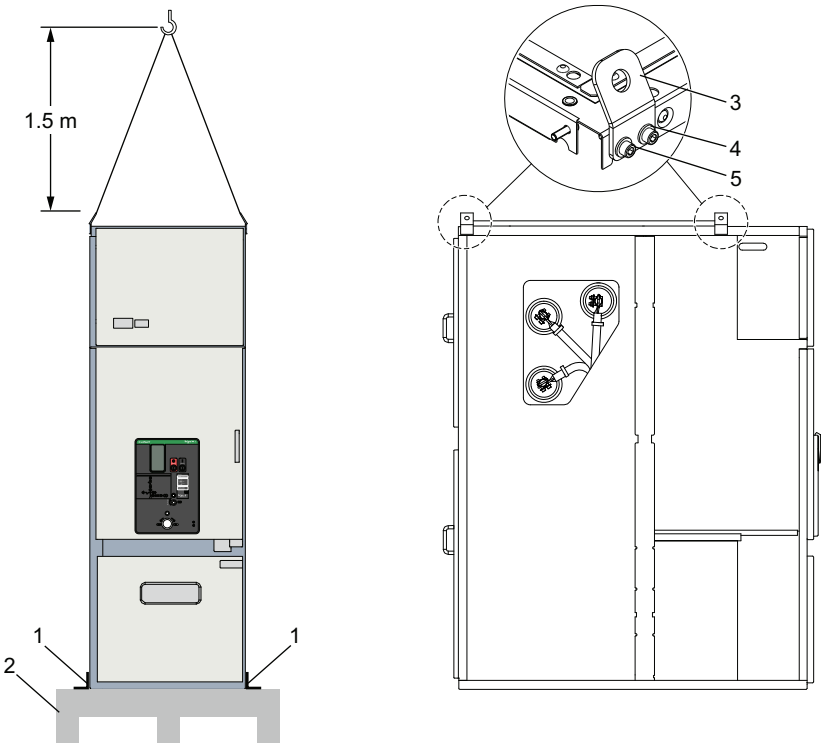

Figure 12
Switchgear Cubicle Transport with Crane

1	Fixing brackets	4	Plane washer M10
2	Pallet	5	Allen screw M10 x 35
3	Lifting brackets		

Transport of the VCB

Follow the below steps to lift and deposit the VCB.

1. Install the lifting hooks on the side plates of the VCB as shown below.



Figure 13
Install the Lifting Hooks

2. When handling, guide the VCB roughly in horizontal position by the front cover as shown below.



Figure 14
Guide the VCB

Placing Cubicle in a Switchgear Room

NOTICE

HAZARD OF INCORRECT INSTALLATION

- When carrying out the installation activities, ensure not to remove enclosed parts of the cubicle such as sensors, heater, surge arrestor, cabling arrangement, gland plates, cable sealing, top cover flaps, all external doors (CB door, cable door, rear door, and rear cover), door earthing, door handles, and safety stickers & labels.
- Ensure to assemble the cubicle with tunnels according to design requirements, cubicle earth system, and end covers.

Failure to follow these instructions can result in equipment damage.

NOTE: Placing of the cubicle can be carried out by lifting or rolling (Figure 15 and Figure 16).

Follow the below steps to place the cubicle in a switchboard:

1. Start by placing the cubicle in the middle of the switchboard.

   NOTE: Except in the case of an extension of the existing switchboard.

2. Place the other cubicles on either side of the first one. Refer the *Civil Engineering Guide* (BQT8706400) for spacing around the switchboard.

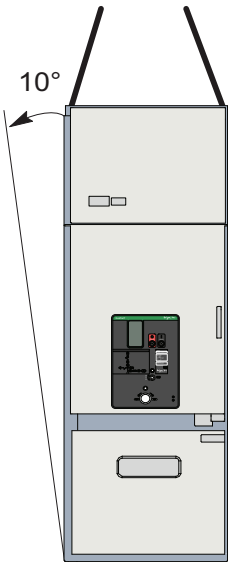

Figure 15
Placement of the cubicle by lifting

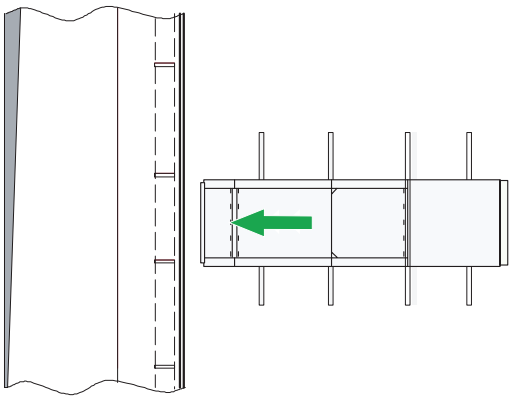

Figure 16
Placement of the Cubicle by Rolling

Storage

⚠WARNING

HAZARD OF STORING UNDER INADEQUATE CONDITIONS

- Sufficient stability and evenness of the supporting area must be ensured.
- Cubicles must be stored in vertical positions and must not be stacked.

Failure to follow these instructions can result in death, serious injury, or equipment damage.

If the cubicles are not installed immediately after delivery, they can be stored under the following conditions:

- Indoor storage only is admissible.
- Switchgear and accessories should be stored sealed with desiccants in aluminum foil and packed in a wooden box (the storing time before installation is compliant with the warranty period in the terms and conditions).
- Pallet should not be removed until the installation.
- Storage only in packed condition. Performance will not be guaranteed if stored in open condition.
- The storage room environment should be healthy, no rodents, humidity control ≤95%/≤90% for 24 hrs and 1 month respectively, and no water on the floor.

Store the devices in their original packaging, placed on dry ground or on a material insulating it from environmental condition.

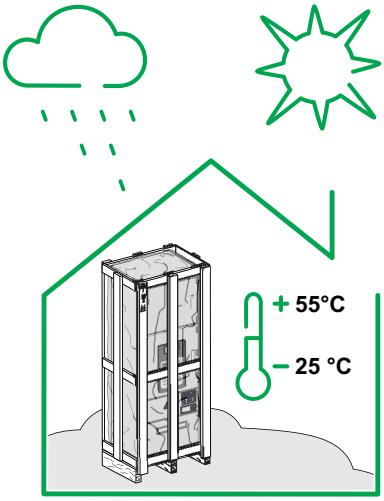

NOTICE

HAZARD OF STORING UNDER INADEQUATE CONDITIONS

Ensure that the equipment is not stored for longer than 6 months.

Failure to follow these instructions can result in equipment damage.

The cubicle storage conditions within the period are as follows:

- Between 6 and 12 months, perform basic level preventive maintenance to help ensure a correct cubicle and withdrawable devices operation.
- Beyond 12 months, contact Schneider Electric Service local representative for check-up.

  NOTE: Switchgear should be checked periodically for any signs of deterioration. It is recommended that switchgear must not be stored more than six months.

After unpacking, check the cubicle carefully for:

- Absence of broken or damaged parts.
- Absence of condensation marks or droplets.
- Absence of visible degradation (color change, rust, deposits, and so on).

In case of any degradation detected, the cubicle cannot be installed.

Heater

⚠WARNING

HAZARD OF EQUIPMENT CORROSION

- Do not alter the location of the heater.
- Do not tamper with the heater wires.

Failure to follow these instructions can result in death, serious injury, or equipment damage.

NOTICE

HAZARD OF STORING UNDER INADEQUATE CONDITIONS

Indoor switchgear units must be stored in a pollution-free indoor environment.

Failure to follow these instructions can result in equipment damage.

Each MCSeT cubicle is equipped with two heaters, in the VCB compartment and in the cable compartment respectively. Energize the heaters to help prevent any moisture formation inside the switchgear units.

NOTE:

- Heaters should be ON and energized for two days before commissioning or putting in service.
- Heaters should be continuously ON during the operation of the MCSeT cubicles.

Installation and Operation Recommendation

Aging

The MCSeT switchgear series is designed to work within the normal service conditions as specified by IEC 62271-1 clause 4.1.2.

The switchgears resistance to aging in an MV substation depends on three main factors:

1. The necessity of correct implementation of connections:
   - New cold retractable or slip-on technology offers ease of installation that favours resistance over time.
   - Their design allows them to use in polluted environments with low and medium class of climatic conditions.
2. Impact of the relative humidity factor:

⚠⚠DANGER

HAZARD OF ELECTRIC SHOCK, EXPLOSION OR ARC FLASH

- Keep the heater ON to eliminate humidity and condensation.
- Ensure that no dirt and dust are present during the installation process.

Failure to follow these instructions will result in death or serious injury.

   - Installing a heating device is essential in climates with high relative humidity levels and major temperature differences.
   - The equipment must be installed in conformity with the relevant IEC standards.
   - Outside of these normal usage conditions, it is recommended to contact Schneider Electric to determine the operations to be carried out as well as their frequency according to the actual service conditions.
3. Electrical room ventilation control:

⚠CAUTION

HAZARD OF EQUIPMENT OVERHEATING

Grid size must be suited to the power dissipated in the substation.

Failure to follow these instructions can result in injury or equipment damage.

   - Avoid air circulation from transformer to switchboard.

Operation and Maintenance

It is advised to periodically carry out (minimum every two years approximately), a few operation cycles on operating devices.

- Outside normal conditions of use (between +5 °C and 40 °C , absence of dust, corrosive gas, and so on), it is recommended to contact Schneider Electric to examine and determine the steps to be taken in order to help ensure correct installation and operation.
- After 6 to 12 months of operation, it is recommended to check the busbars and MV cable connection torque.
- Use a calibrated torque wrench, and adjust the torque to lower values as indicated in Standard Tightening Torques, page 13.

- If no issues are detected and if the busbars and cable connections are not modified, it is not necessary to perform this check again.
- In case of disassembly, the elastic contact washers should be replaced with new ones supplied by Schneider Electric.

The Schneider Electric service center is at your disposal at anytime:

- To diagnose the installation,
- To offer suitable maintenance operations,
- To offer maintenance contracts, and
- To offer adaptations.

Refer to *MCSeT User Guide* (BQT6904800) for practical information on:

- To maintain the equipment in good operation condition.
- To help ensure that the equipment is safe during all installation, repair, and service operations.

Installation Instructions

Safety Provisions

⚠⚠DANGER

HAZARD OF ELECTRIC SHOCK, EXPLOSION, OR ARC FLASH

During assembly, installation and connection, the energy storing devices must not be charged.

Failure to follow these instructions will result in death or serious injury.

⚠WARNING

HAZARD OF TOPPLING

When handling the moving devices, pay attention to uneven floor surfaces (for example, cracks, projections, and so on) of the switchgear room.

Failure to follow these instructions can result in death, serious injury, or equipment damage.

⚠WARNING

HAZARD OF FALLING

- Do not walk upon the topsides of the switchgear cubicles.
- During civil engineering activities, when working on the top of the switchgear cubicles (such as during the installation of deflectors, fans, or pressure relief ducts), temporarily attach a sturdy base plate that is walkable.

Failure to follow these instructions can result in death, serious injury, or equipment damage.

⚠WARNING

HAZARD OF INCORRECT INSTALLATION

- The switchgear cubicles must only be installed and assembled by the manufacturer's staff or by persons who are certified for this work.
- Observe the Safety Provisions, page 10.

Failure to follow these instructions can result in death, serious injury, or equipment damage.

Important Information for Assembly

The MCSeT cubicles are delivered with E/S ON position. The VCBs are always shipped in an open state (OFF) with the energy-storing device released.

NOTICE

HAZARD OF NON COMPLIANCE TO ASSEMBLY INSTRUCTIONS

- Ensure there is no condensation, dirt, and dust during assembly of cubicles on all accounts.
- Observe and read assembly drawings before commencing the assembly work.

Failure to follow these instructions can result in equipment damage.

Requirements of the Switchgear Room

⚠CAUTION

HAZARD OF INCORRECT DIMENSIONS

Adhere to the specified spacing dimensions around the switchboard, refer to Table 15.

Failure to follow these instructions can result in injury or equipment damage.

Prior to the installation of switchgear cubicles, refer to *Civil Engineering Guide* (BQT8706400) and make sure that the switchgear room complies with the below requirements:

- Observe the minimum distance between the switchgear and the wall of the room.
- The load-bearing capacity of the fastening areas must correspond to the weight of the switchgear (perform a stress analysis of the building).
- Check base frame (if used) for dimensions and positional tolerances.
- Check position of floor openings for MV and LV cables.

  NOTE: Observe switchgear-specific space assignment plan, refer to Ground Plan of a MCSeT Switchgear within a Switchgear Room, page 43.

Table 15 Pressure Relief Exhausts and Civil Engineering Utility Space

Pressure relief	
Switchboard external exhaust	Switchboard internal exhaust
Tunnel	Tunnel and absorber
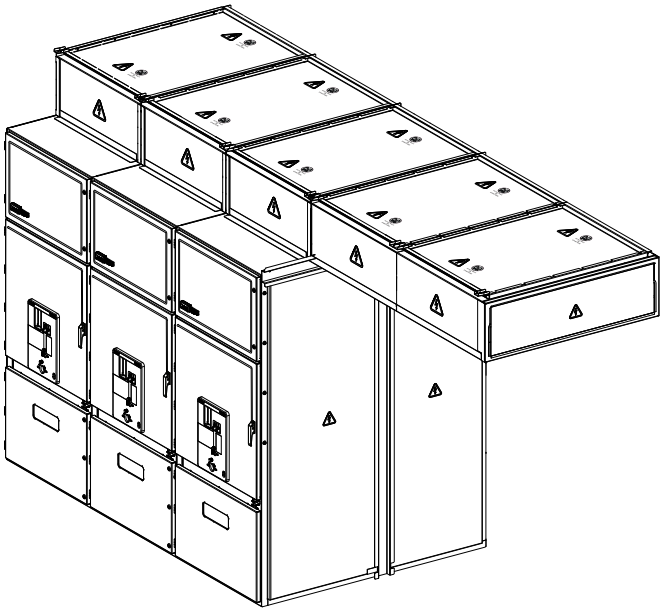	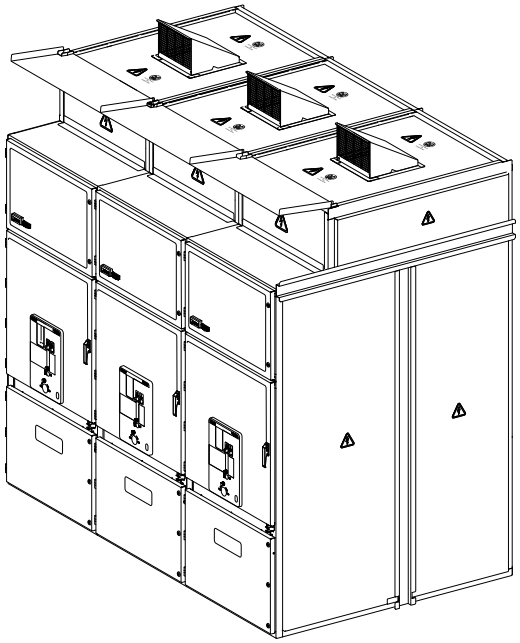
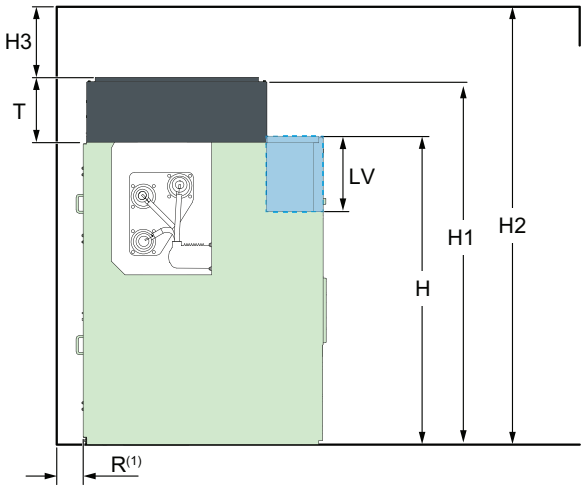	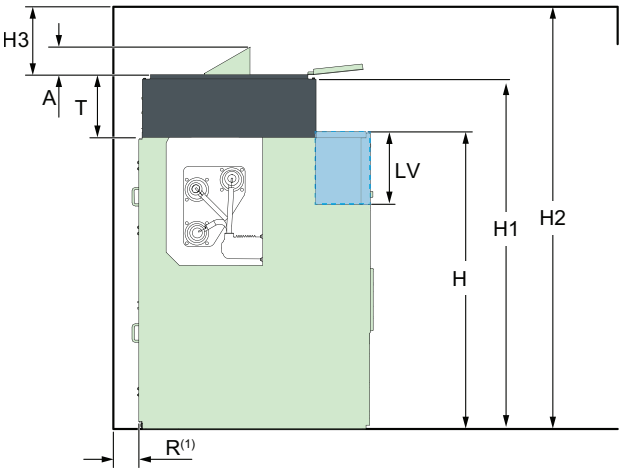

Rated voltage (kV)	Basic structure panel dimension (mm)		Pressure relief								
			Outside the building tunnel dimension (mm)				Inside the building tunnel and absorber dimension (mm)				
Ur	H	LV	H1(2)	T(3)	H2	H3(4)	H1(2)	T(3)	A	H2	H3
Up to 12/17.5	2240	580	2710	470	3000	200	2710	470	260	3400	680
24	2400	630	2950	550	3150	200	2850	450	220	3500	650

(1) R - Distance to rear wall, 200 mm (AFL) and minimum 800 mm (AFLR).

(2) With standard LV cabinet 630 mm. Increased height of LV cabinet is available, without impact on the ceiling height.

(3) Height of the tunnel is inclusive of flange (40 mm for 24 kV and 12/17.5 kV).

(4) Minimum 200 mm.

Floor Finishing

Surface Condition

NOTICE
HAZARD OF INCORRECT EQUIPMENT OPERATION • Before positioning the switchgear at its installation site, ensure that the fastening points are at the correct level. • Unevenness must not exceed ± 2 mm/m and there must not be a height difference of more than 6 mm over the entire width of the switchgear. **Failure to follow these instructions can result in equipment damage.**

Laser check is required for accurate check of the floor levelness. Floor level is more essential for correct assembly and performance of the product.

Floor Quality

The floor must have a compression withstand ≥ 33 MPa to roll the extraction tool on it without any damage.

Ground Plan of a MCSeT Switchgear within a Switchgear Room

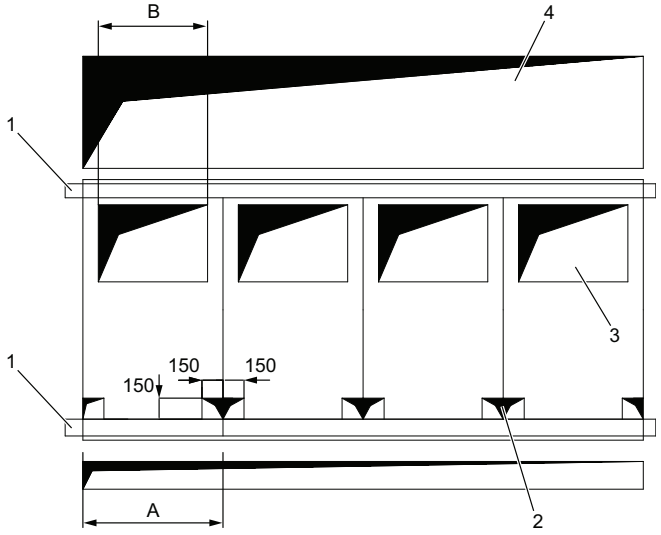

Figure 17
Dimensions in the Switchgear Room

1	C-channel rail	3	Opening for routing high-voltage cables
2	Opening for routing external low-voltage cables	4	Power cable trench

Cubicle width A (mm)	Dimension B (mm)		
	Rated voltage 7.2 kV	Rated voltage 12/17.5 kV	Rated voltage 24 kV
400	285	–	–
650	–	400	–
800	–	550	550
1000	–	750	750

Detailed View of Bottom Plates

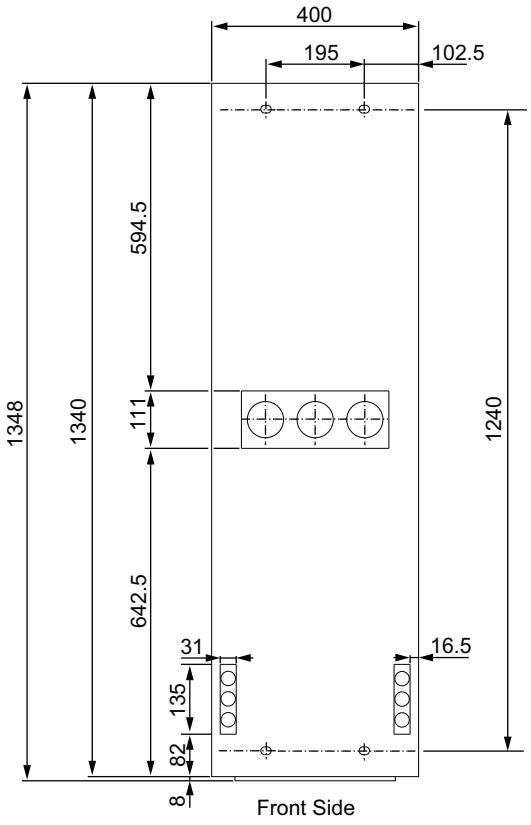

Figure 18
Bottom Plate of 400 mm Feeder with Contactor Cubicle

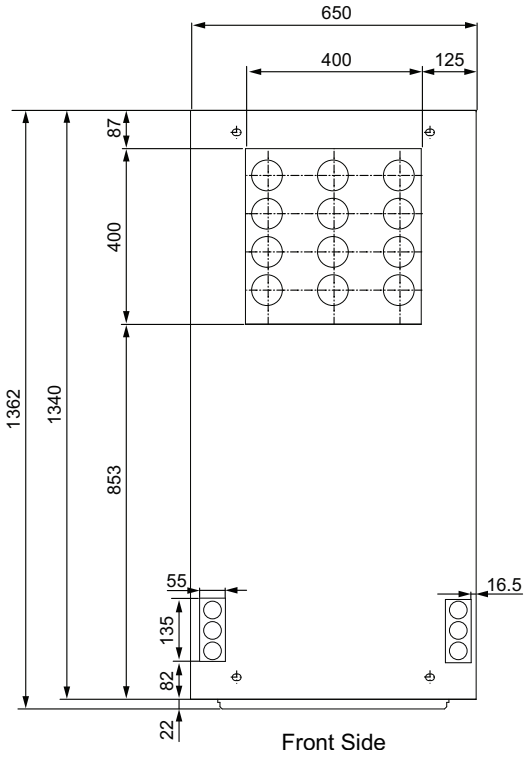

Figure 19
Bottom Plate of 650 mm Cubicle with Four Runs

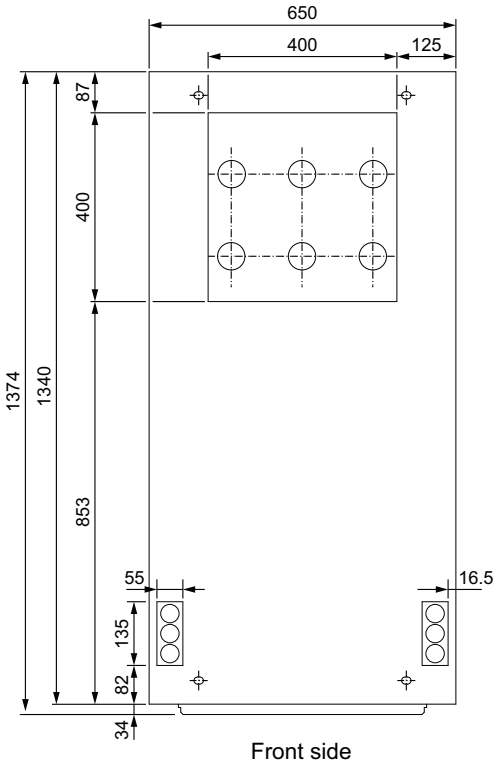

Figure 20
Bottom Plate of 650 mm Cubicle with Two Runs

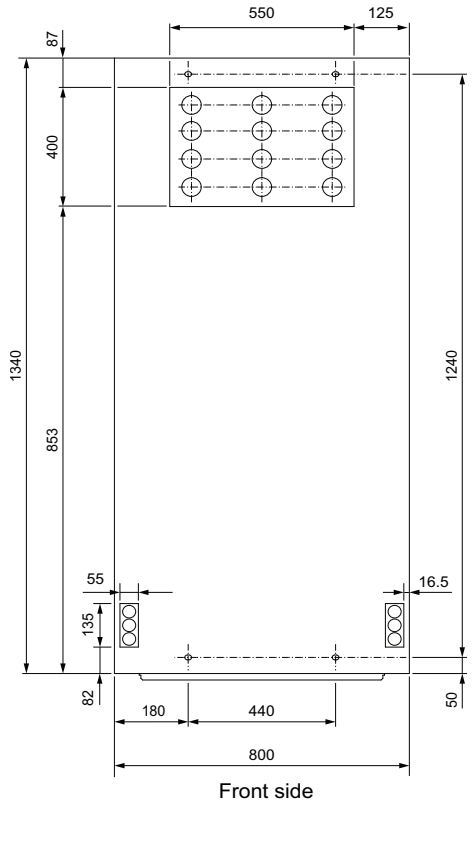

Figure 21
Bottom Plate of 800 mm Cubicle for 12/17.5 kV

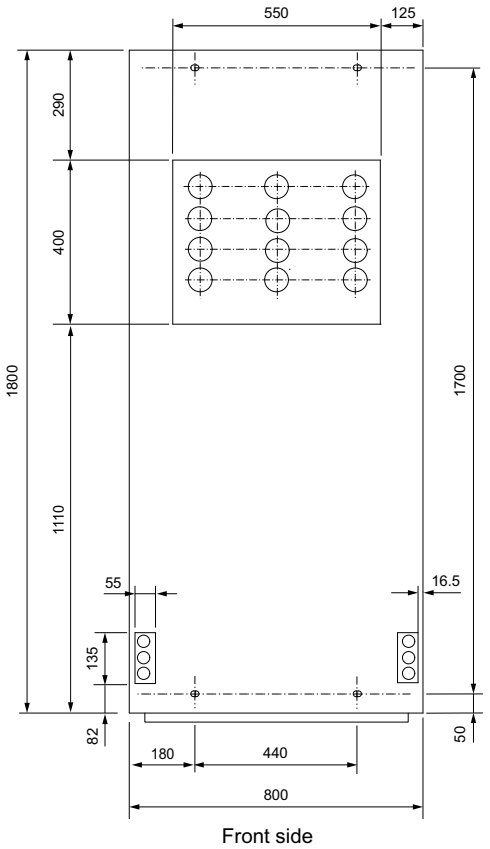

Figure 22
Bottom Plate of 800 mm Cubicle for 24 kV

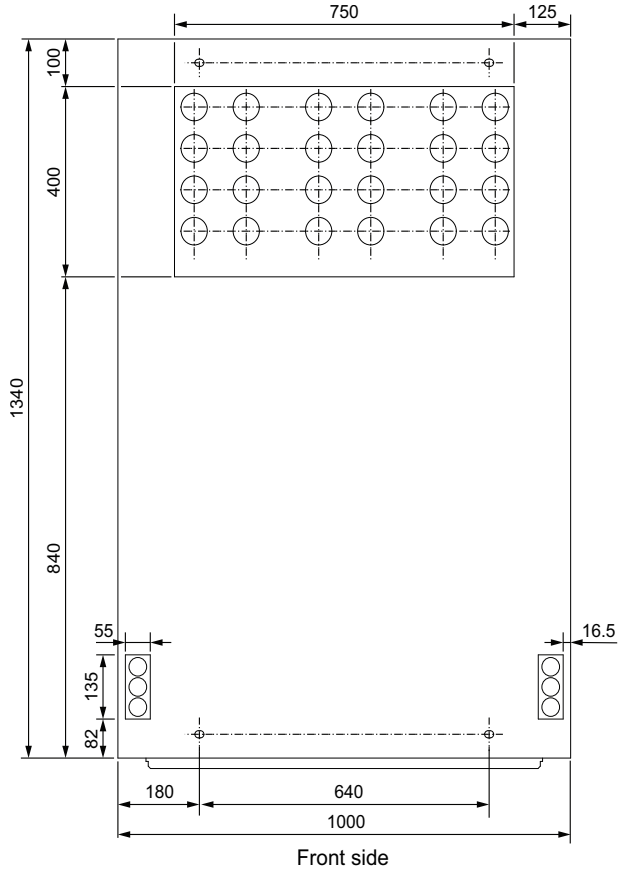

Figure 23
Bottom Plate of 1000 mm Cubicle for 12/17.5 kV

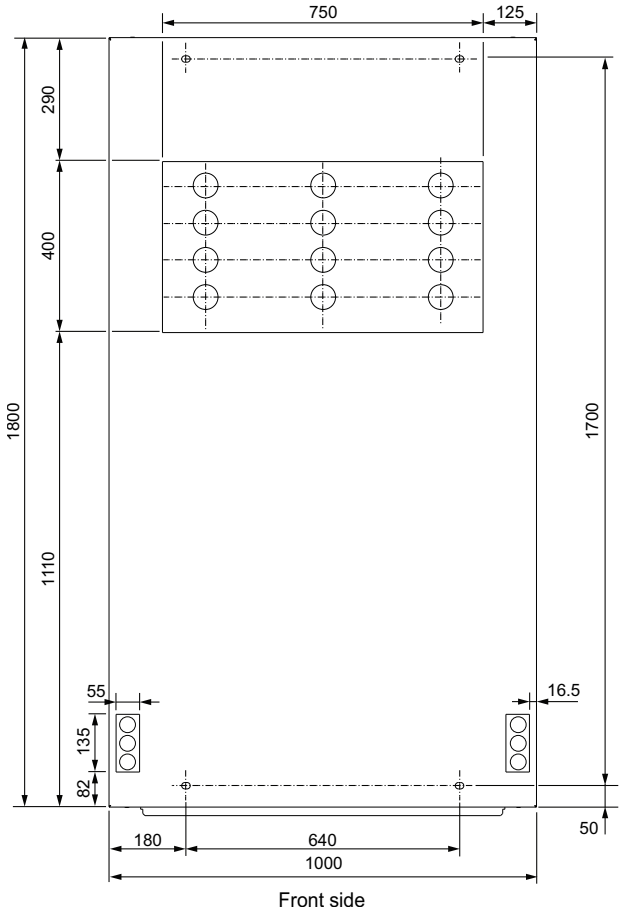

Figure 24
Bottom Plate of 1000 mm Cubicle for 24 kV

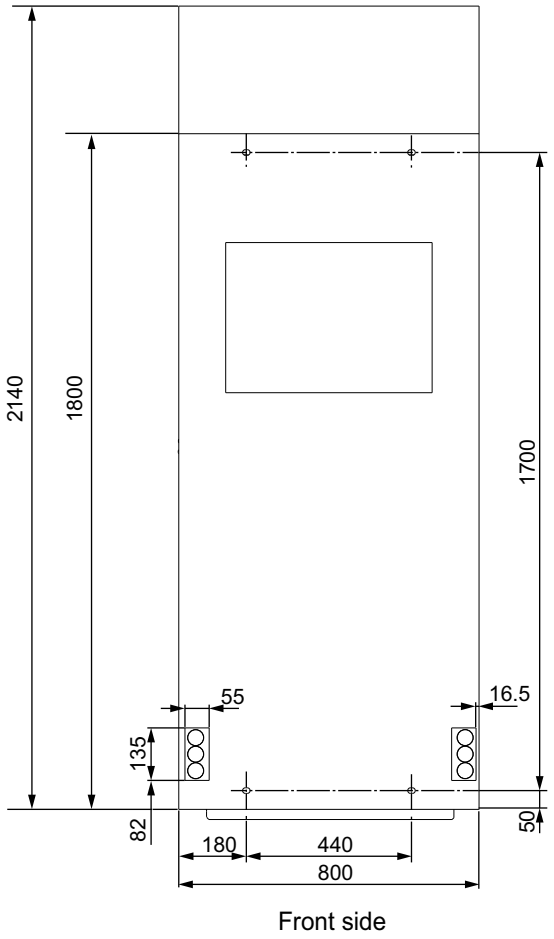

Figure 25
Bottom Plate of 800 mm Top Busway Entry Cubicle 24 kV

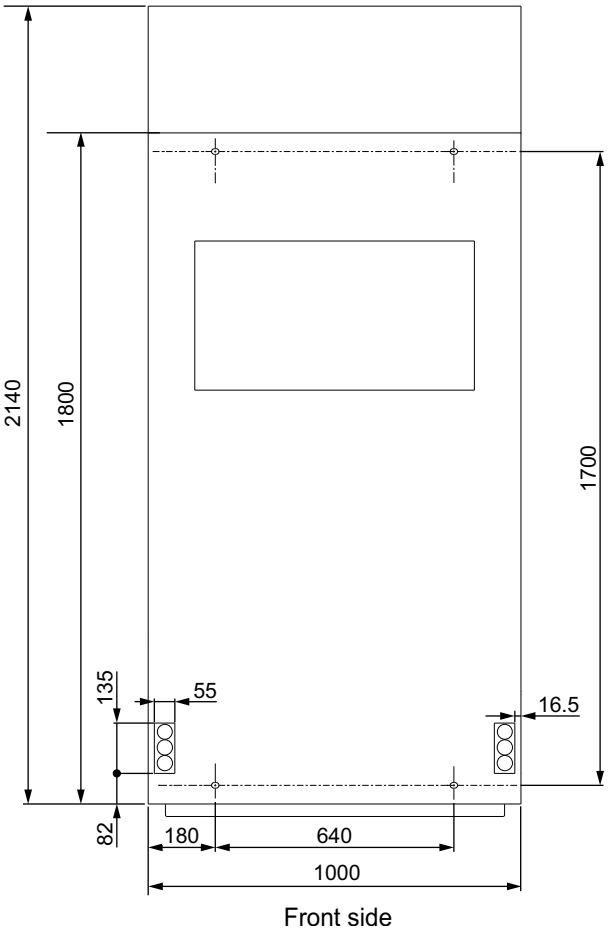

Figure 26
Bottom Plate of 1000 mm Top Busway Entry Cubicle 24 kV

Fastening of the Cubicles

⚠WARNING

HAZARD OF INSTALLING UNDER INADEQUATE CONDITIONS

Do not allow a cubicle to be raised after the next one is installed to avoid vibrations caused by load.

Failure to follow these instructions can result in death, serious injury, or equipment damage.

NOTICE

HAZARD OF INSTALLING UNDER INADEQUATE CONDITIONS

- Before positioning the switchgear at its installation site, ensure that the fastening points are at the correct level.
- Unevenness should not exceed ± 2 mm/m and there should not be a height difference of more than 6 mm over the entire width of the switchgear.

Failure to follow these instructions can result in equipment damage.

NOTICE

HAZARD OF INAPPROPRIATE ASSEMBLY

Comply with precise measurements for the placement of the cubicle, as the positioning of the first cubicle determines the placement of the remaining cubicles.

Failure to follow these instructions can result in equipment damage.

Fastening on Concrete Foundations

Follow the below steps to fasten the cubicle to the floor on standard civil engineering works:

1. Position first cubicle on the floor in accordance with the switchgear-specific space assignment plan, refer to Ground Plan of a MCSeT Switchgear within a Switchgear Room, page 43.
2. Remove the cable compartment cover. Refer to *Access to the Cable Compartments, User Guide* (BQT6904800).
3. Once the cubicle is positioned:
   - Verify that the cubicle front is correctly aligned both horizontally and vertically.
   - If necessary, raise the cubicle and insert shims below the cubicle near the fastening points until the correct horizontal position is achieved, refer to Figure 27.
4. Fasten the cubicle with screws to the two fastening points on both the front end and the rear end.

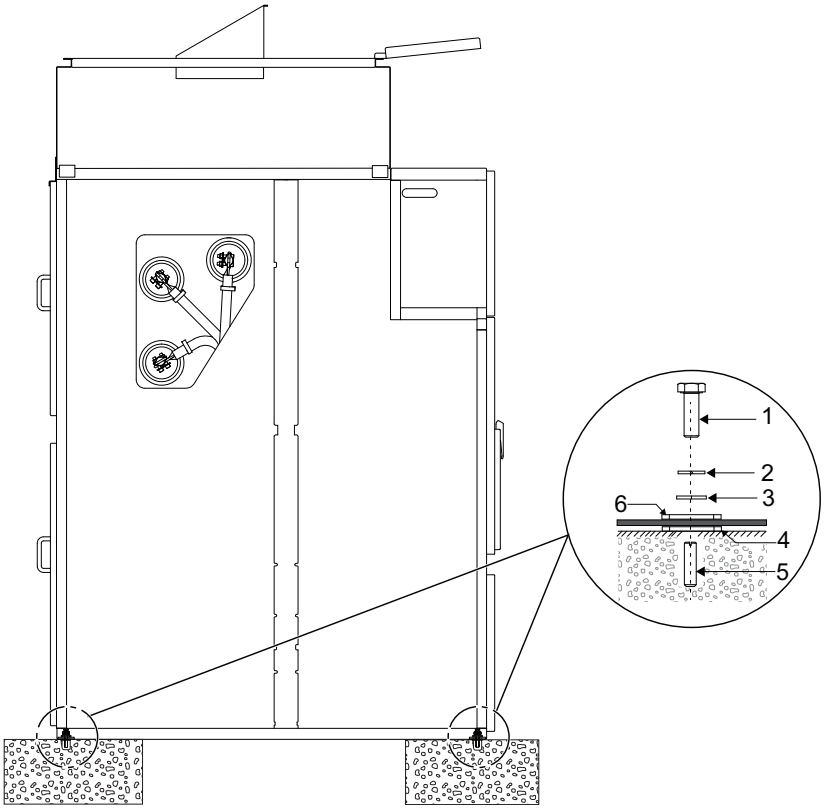

Figure 27
Cubicle Fastening on Concrete Foundations

1	Screw M10 x 30	4	Shim plate(1)
2	Spring lock washer M10	5	Slotted set screw M10 x 30
3	Plain washer	6	Plate 3 mm

(1) Add shim plates as needed.

Additional Fastening Variants (C-Channel)

The additional fastening variants are available on request. For details, contact the manufacturer.

Follow the below steps to fasten the cubicle on C-channel rails on standard civil engineering works:

1. Drill holes into the C-channel frames at the intended cubicle fastening points, refer to Figure 28.
2. Position the cubicle on the C-channel rails, aligning the fastening points.
3. Insert dowel pin and other suitable fasteners (provided by Schneider Electric) refer to Figure 29.
4. Securely fasten the cubicle to the C-channel rails at the designated points.

NOTE:

- The additional fastening variants are available on request. For details, contact Schneider Electric.
- C-channel rails are not be provided by Schneider Electric.

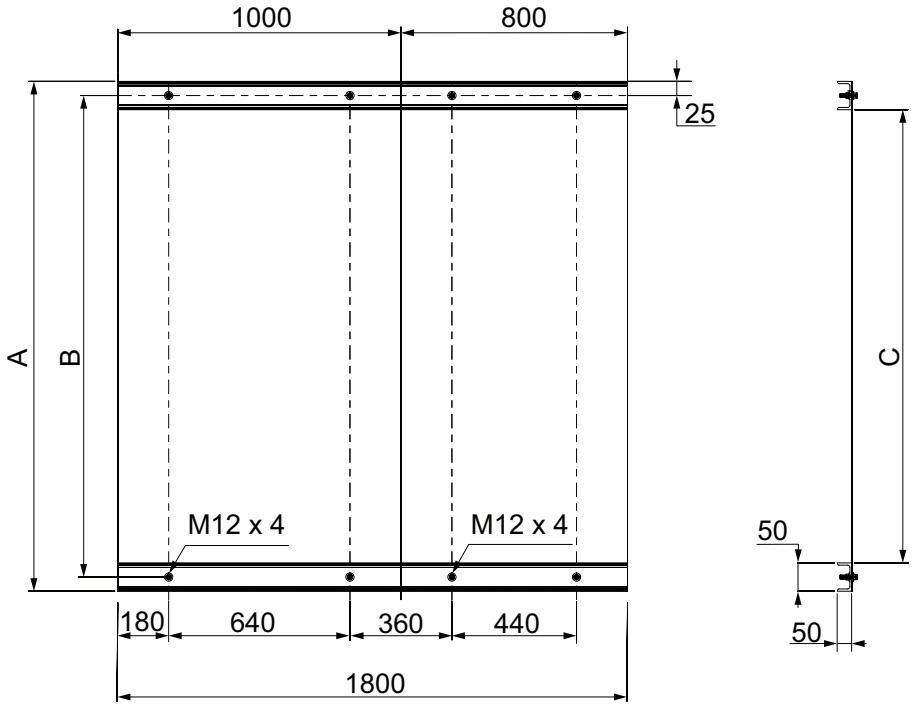

Figure 28
Dimension of the Floor Space and C-Channel Rails

Rated voltage (kV)	Dimensions (mm)		
	A	B	C
7.2/12/17.5	1340	1290	1240
24	1800	1750	1700

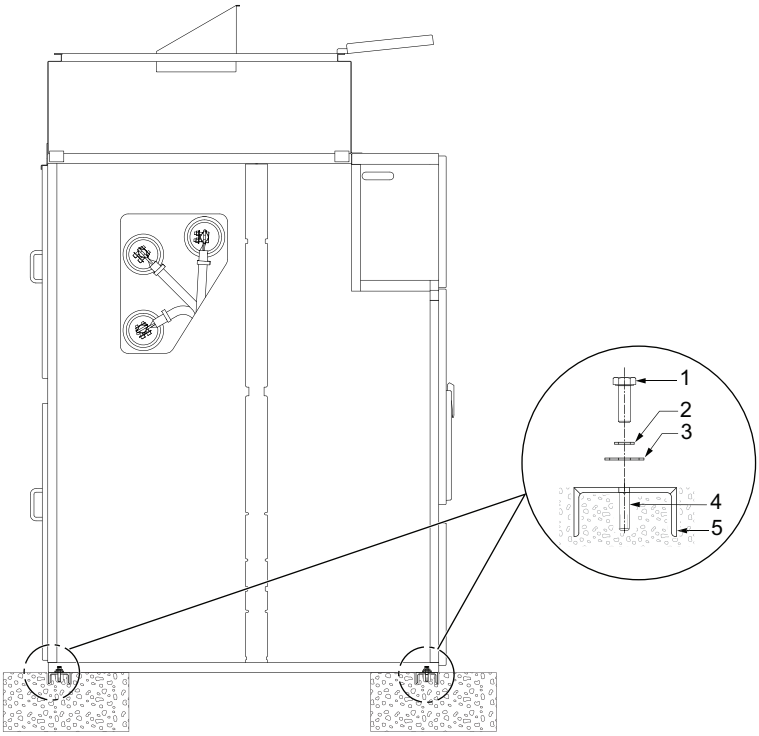

Figure 29
Cubicle Fastening on Base Frame

1	Allen screw M12 x 45	4	Dowel pin
2	Washer M12	5	C-channel rail
3	Square washer		

Coupling of Cubicles

NOTICE
HAZARD OF INCORRECT INSTALLATION Before assembly, ensure to remove the lifting brackets and its associated hardware. **Failure to follow these instructions can result in equipment damage.**

Follow the below steps to couple the cubicles:

1. Position the second cubicle next to the previous one in accordance with the assignment plan and align it (Figure 30 and Figure 31).
2. Install the 7.2/12/17.5 kV cubicles to one another on the front side with eight quantities of M8 x 25 screw, and conical washer; rear side with eight quantities of M8 x 25 screw, and conical washer (Figure 30).
3. Install the 24 kV cubicles to one another on the front side with five quantities of M10 x 30 screw, conical washer, and nut; rear side with four quantities of M10 x 30 screw, conical washer, and nut (Figure 31).

   NOTE: To help secure the rear side of the AFL type cubicle, access the cable compartment from front side. Refer to *Access to the Cable Compartment from Front Side AFL, User Guide* (BQT6904800).

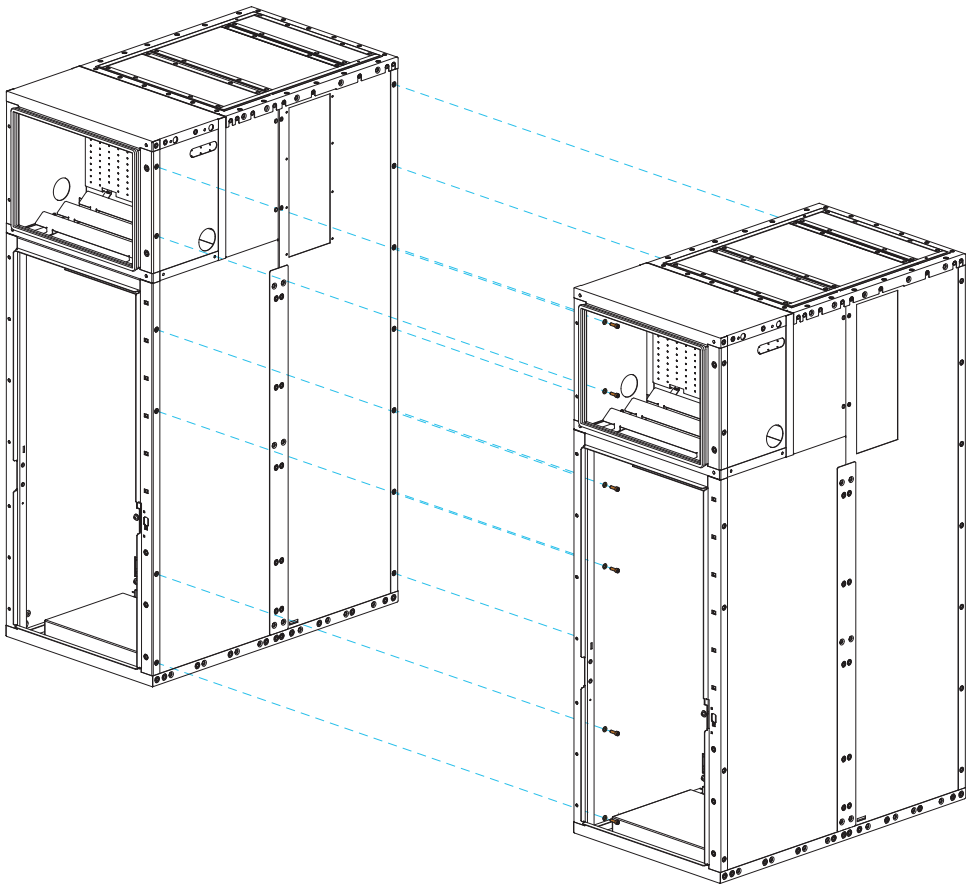

Figure 30
Screw-Fastening the 7.2/12/17.5 kV Cubicles to One Another (Sheet 1 of 2)

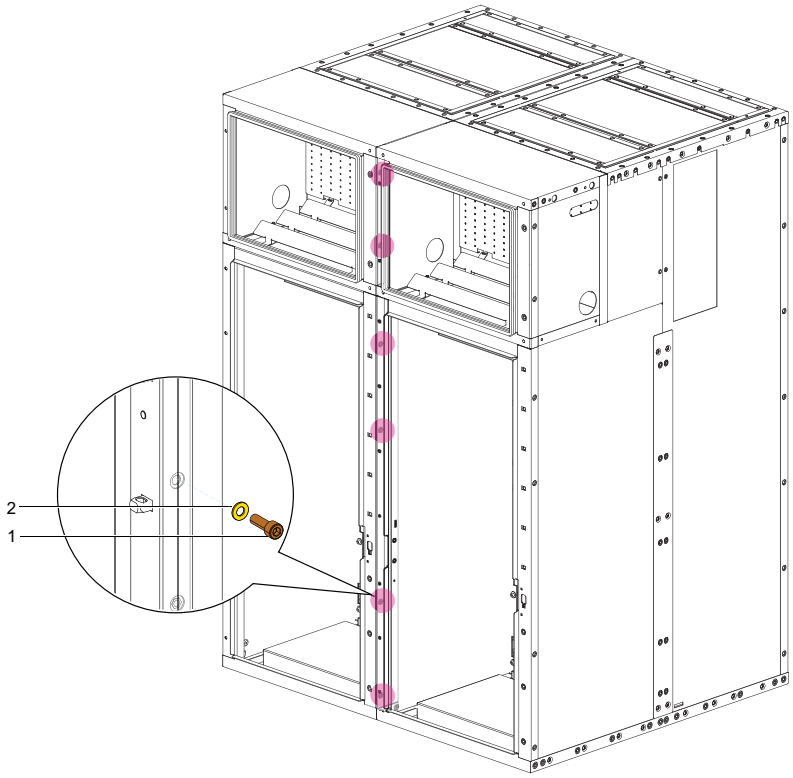

Figure 30
Screw-Fastening the 7.2/12/17.5 kV Cubicles to One Another (Sheet 2 of 2)

1 Allen screw M8 x 25

2 Conical washer M8

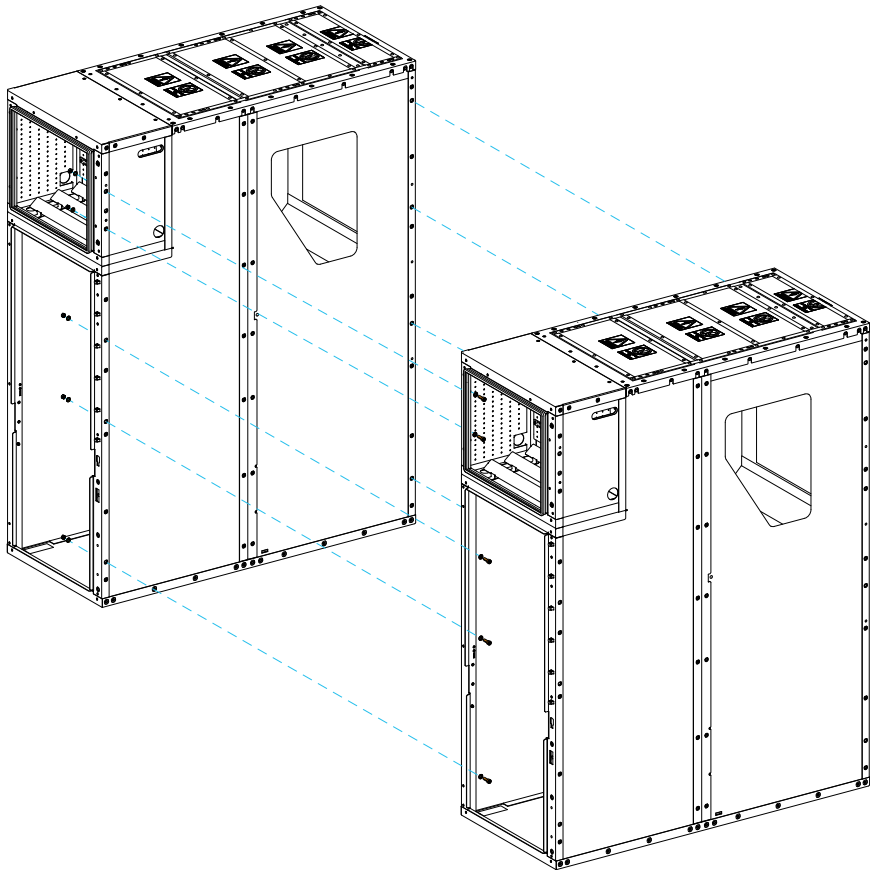

Figure 31
Screw-Fastening the 24 kV Cubicles to One Another (Sheet 1 of 2)

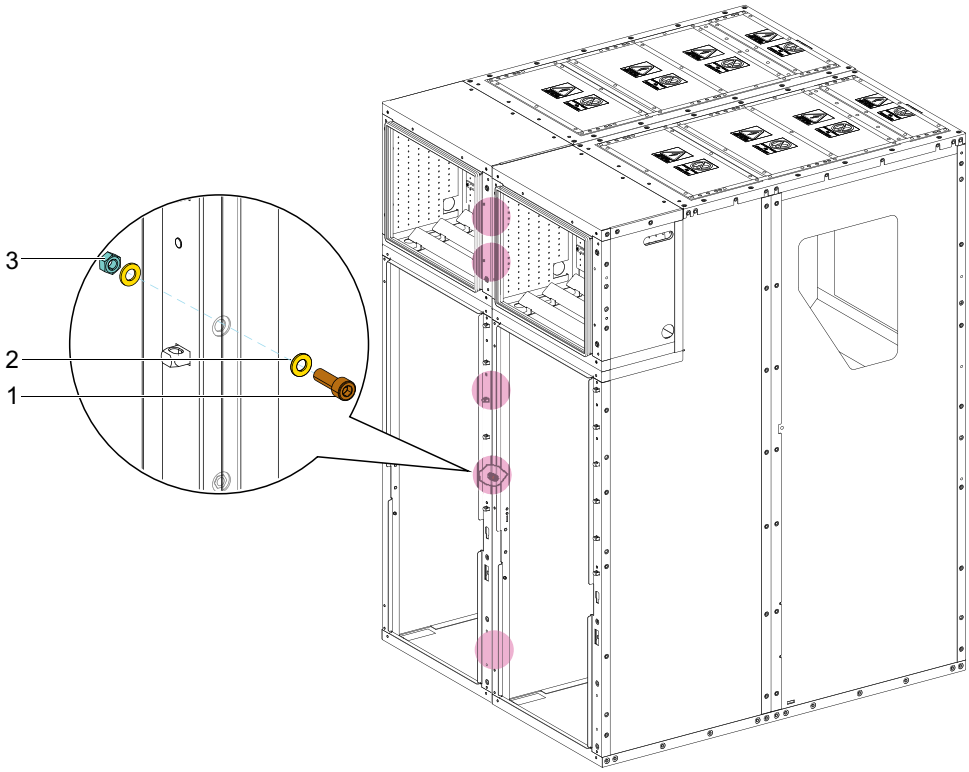

Figure 31
Screw-Fastening the 24 kV Cubicles to One Another (Sheet 2 of 2)

1	Allen screw M10 x 30
2	Conical washer M10
3	Nut M10

Rack-In Check

NOTE: Each time a cubicle is linked to another one, check that the mobile part can be racked-in and locked in position properly.

For the insertion and racking-in of the mobile part and to open the door, refer to *Operations, User Guide* (BQT6904800).

Installing the Main Earth Connection

Switchboard to the Buildings Earth

Earthing system is essential for electrical current to flow safely to the ground in the event of a system fault or overload. Effective earthing helps such that the voltage in the system is stable and remains within safe limits.

Earthing system help ensure the efficient operation of electrical installations and reliable performance of protective relays and control devices.

⚠⚠DANGER

HAZARD OF ELECTRIC SHOCK, EXPLOSION, OR ARC FLASH

Ensure to follow the below steps to install the main earth connection from switchboard to the buildings earth.

Failure to follow these instructions will result in death or serious injury.

NOTE: During the installation of the end sheets, punch the knock-outs from the sheets. The earth bars are screw-fastened from cubicle to cubicle by means of connecting bars.

Follow the below steps to install the main earth connection from switchboard to the buildings earth:

1. Slip the connecting bar into the adjacent cubicles supporting structure through the cut out in the cubicle (Figure 32).
2. Screw-fasten connecting bar on both sides to the earth bar, refer to Figure 33.

   NOTE: Comply with the specifications on treatment of contact surfaces and the tightening torques for screw fastenings as per ST0171.
3. Connect earth bus to the earthing system of the switchgear building.

   NOTE: Connecting lines and screw accessories are not included in the scope of supplies.
4. Earthing switch copper braid is connected with cubicle structure and main earth system copper 30 x 8 mm is connected with inter cubicle earth system.

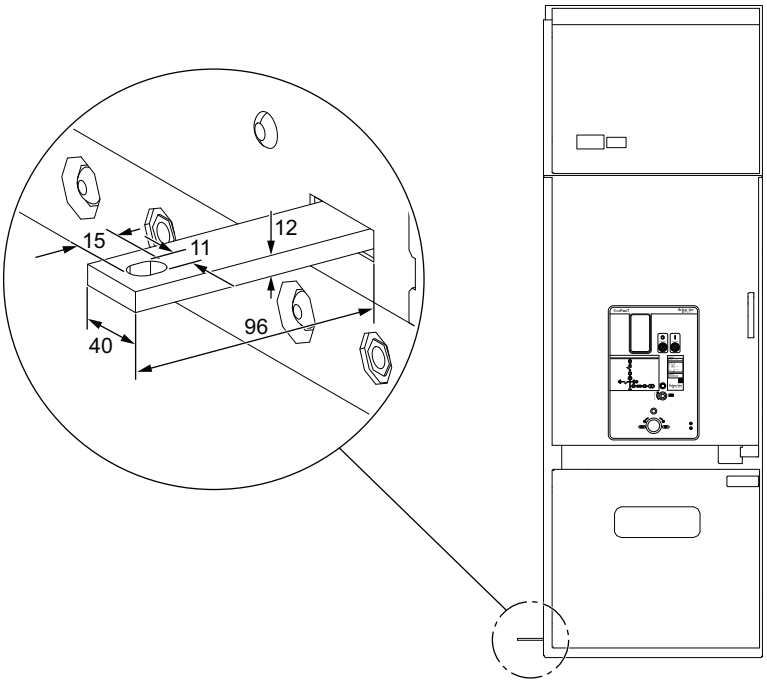

Figure 32
Main Earth Connection from the Switchboard to the Building Earth

Inter-Cubicle Earth Connection (MCSeT-MCSeT)

⚠⚠DANGER

HAZARD OF ELECTRIC SHOCK, EXPLOSION, OR ARC FLASH

- Ensure that the inter-cubiclel earthing system is connected.
- Make sure to follow the below recommended steps for installing the inter cubicle earth connection.

Failure to follow these instructions will result in death or serious injury.

NOTE:

- The inter-cubicle earth connection can be done during the installation of each cubicle or at the end of switchboard assembly.
- The connection is located at the base of the cubicle (Figure 33).

Follow the below steps to install the inter cubicle earth connection.

1. Install the connecting bar (1) by sliding it from one cubicle to the adjacent cubicle (Figure 31).
2. Insert the screw (3) with washer (2) and tighten it with the torque of 35 N•m.
3. Connect earth bus to the earthing system of the switchgear building.

   NOTE: Connecting lines and screw accessories are not included in the scope of delivery.

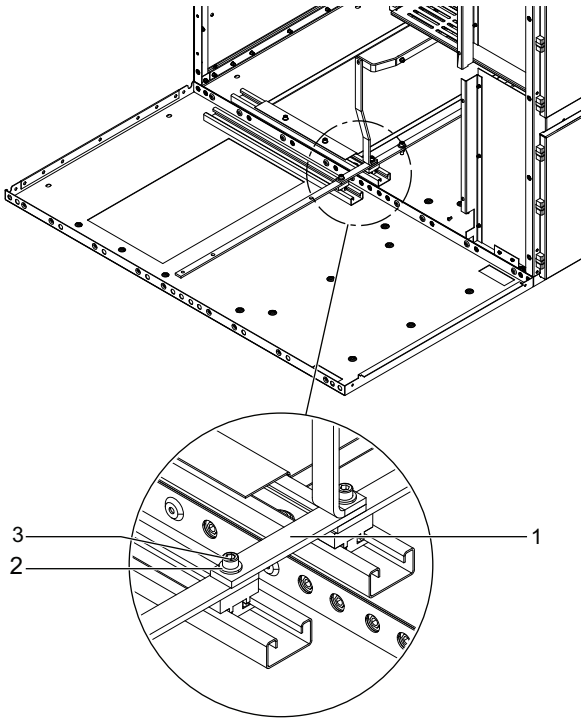

Figure 33
Inter-Cubicle Earth Connection

1	Connecting bar
2	Washer M10
3	Screw M10 x 65

Installing the Electric Connections of the Busbars and MV Cables

Assemblies with bolts for MV and LV internal equipment.

Screws and bolts to be used:

Class 8.8 according to Standard Tightening Torques, page 13.

Connection maintenance:

1. During downtime, check the torque with a torque wrench.
2. In case of disassembly, replace with new elastic washers.

   NOTE: To carry out the following preliminary switchboard operations, refer to *Access to the MCSeT Cubicle Compartments, User Guide* (BQT6904800).

Perform the initial operations listed below:

1. Rack-out the withdrawable part.
2. Close the earthing switch.
3. Extract the withdrawable part.
4. Remove the cover based on IAC (AFL, AFLR).

Installing Busbars

Assemble the busbar connection while installing each cubicle.

NOTE: Retrieve the following components:

- The main busbar in the cubicle packaging, and
- The busbar shims and hardware bag in the cubicle packaging.

1. Access the busbars through the side access of the cubicle.

   NOTE: It is also possible to reach the busbar from within the cubicle. Refer to *Access to the Busbar Compartments, User Guide* (BQT6904800).

2. Place the busbar between the two previously assembled cubicles.

   NOTE: Repeat the above operations each time a switchboard cubicle is placed.

3. For standard torque values, refer to Standard Tightening Torques, page 13 and comply with the specified torque values.

Center Cubicle – 12/17.5 kV

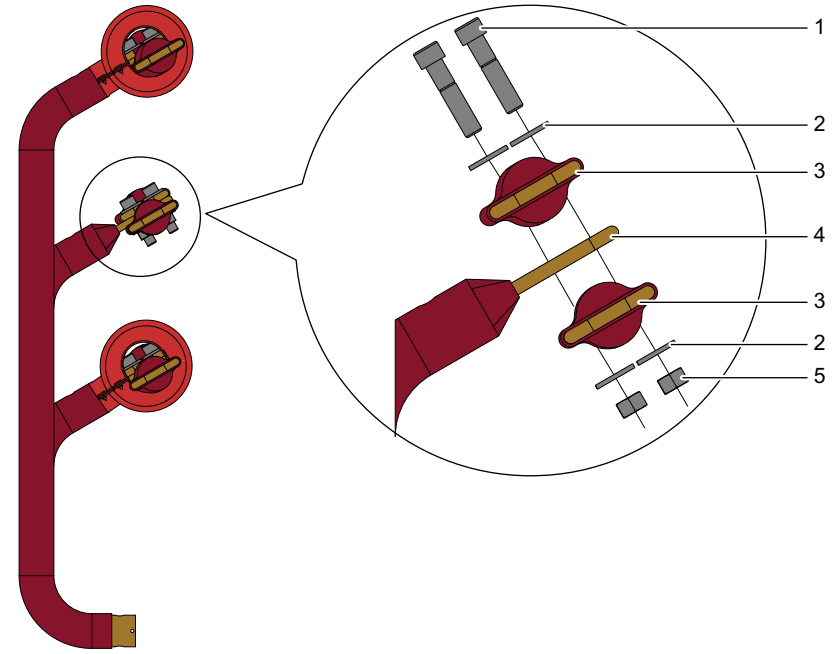

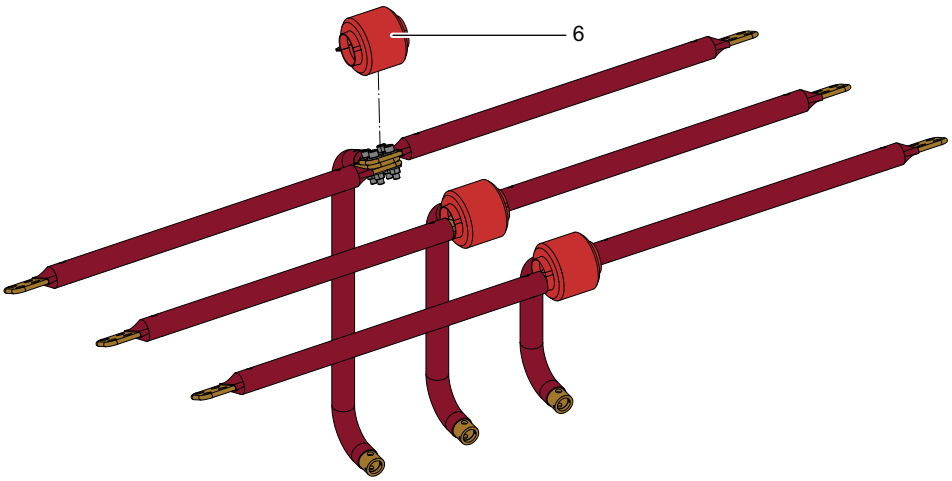

Figure 34
Tubular Busbar Arrangement of 1250 A for 1250 A Feeder with Tubular Droppers

1	Screw M12 x 50	4	Tubular dropper
2	Conical washer M12	5	Nut M12
3	Tubular busbar	6	Boot(1)

(1) Boots are required for 95 kVp in MCSeT 12/17.5 kV.

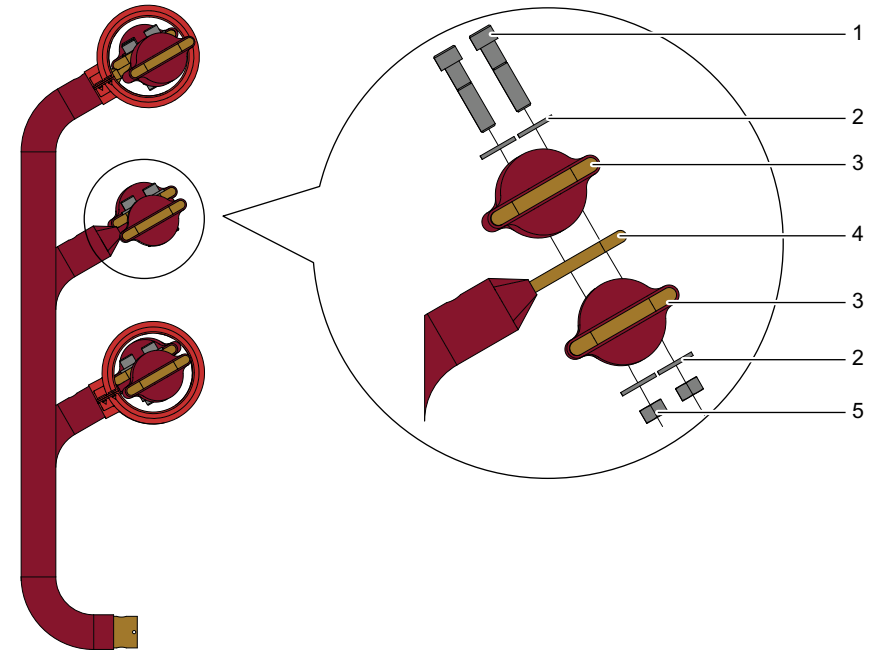

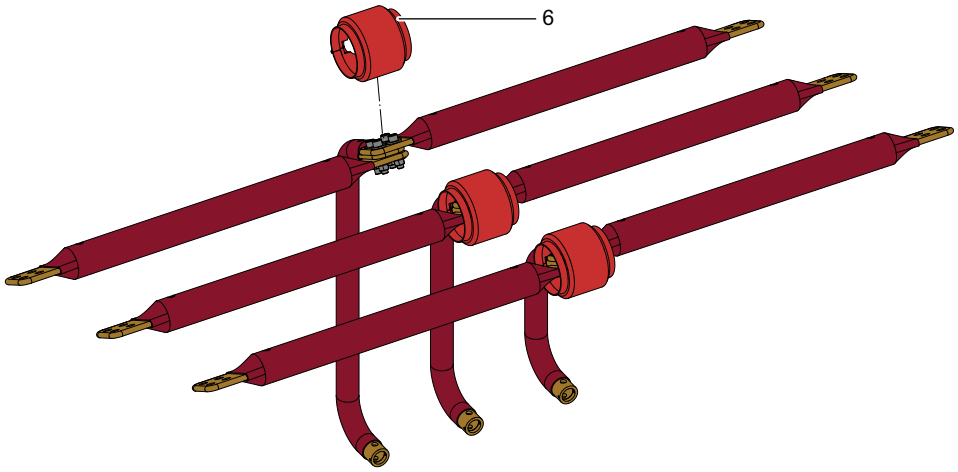

Figure 35
Tubular Busbar Arrangement of 2000 A for 1250 A Feeder with Tubular Droppers

1	Screw M12 x 50	4	Tubular dropper
2	Conical washer M12	5	Nut M12
3	Tubular busbar	6	Boot(1)

(1) Boots are required for 95 kVp in MCSeT 12/17.5 kV.

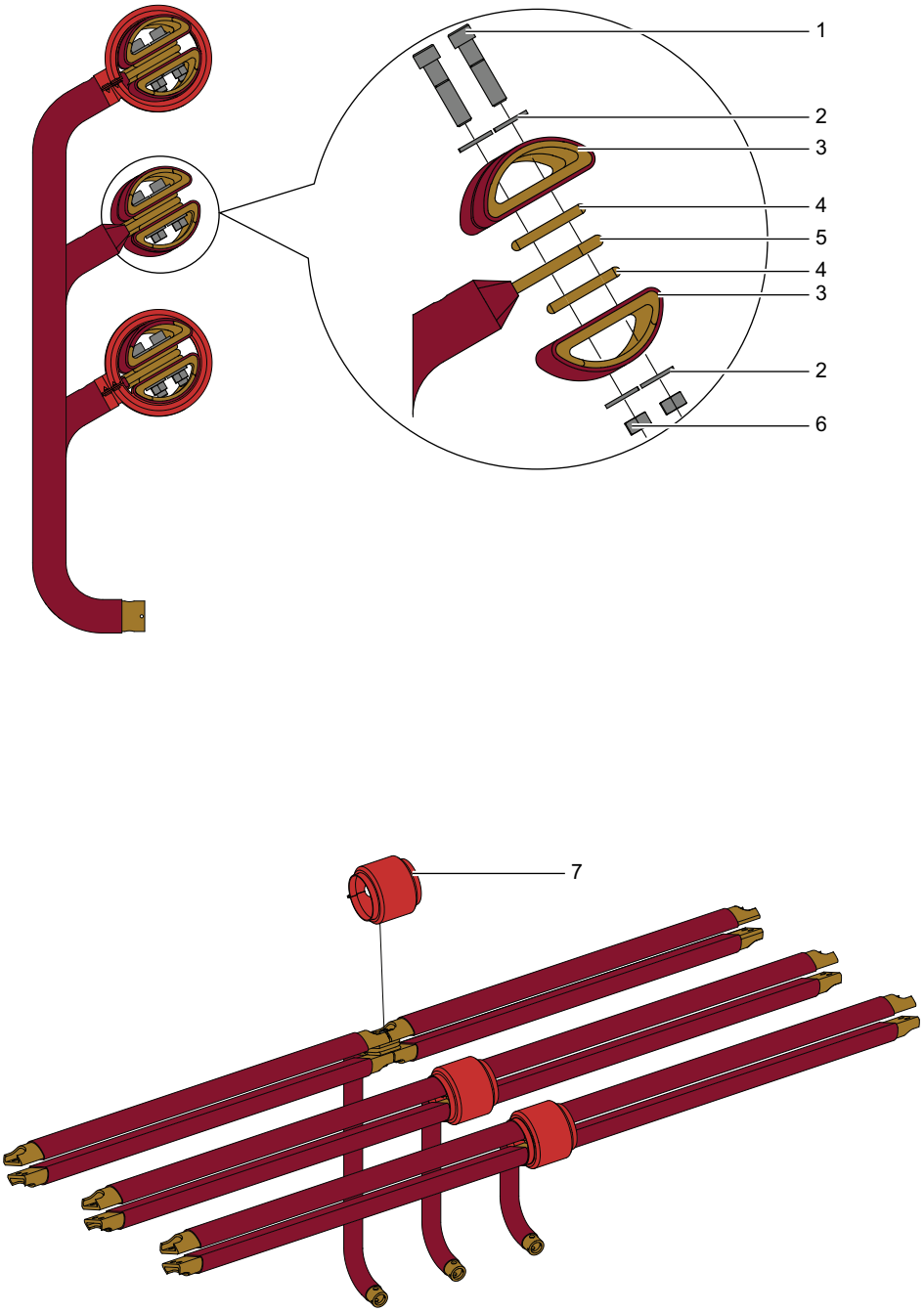

Figure 36
D Shape Busbar Arrangement of 2500 A for 1250 A Feeder with Tubular Droppers

1	Screw M12 x 55	5	Tubular dropper
2	Conical washer M12	6	Nut M12
3	D shape busbar	7	Boot(1)
4	Spacer		

(1) Boots are required for 95 kVp in MCSeT 12/17.5 kV.

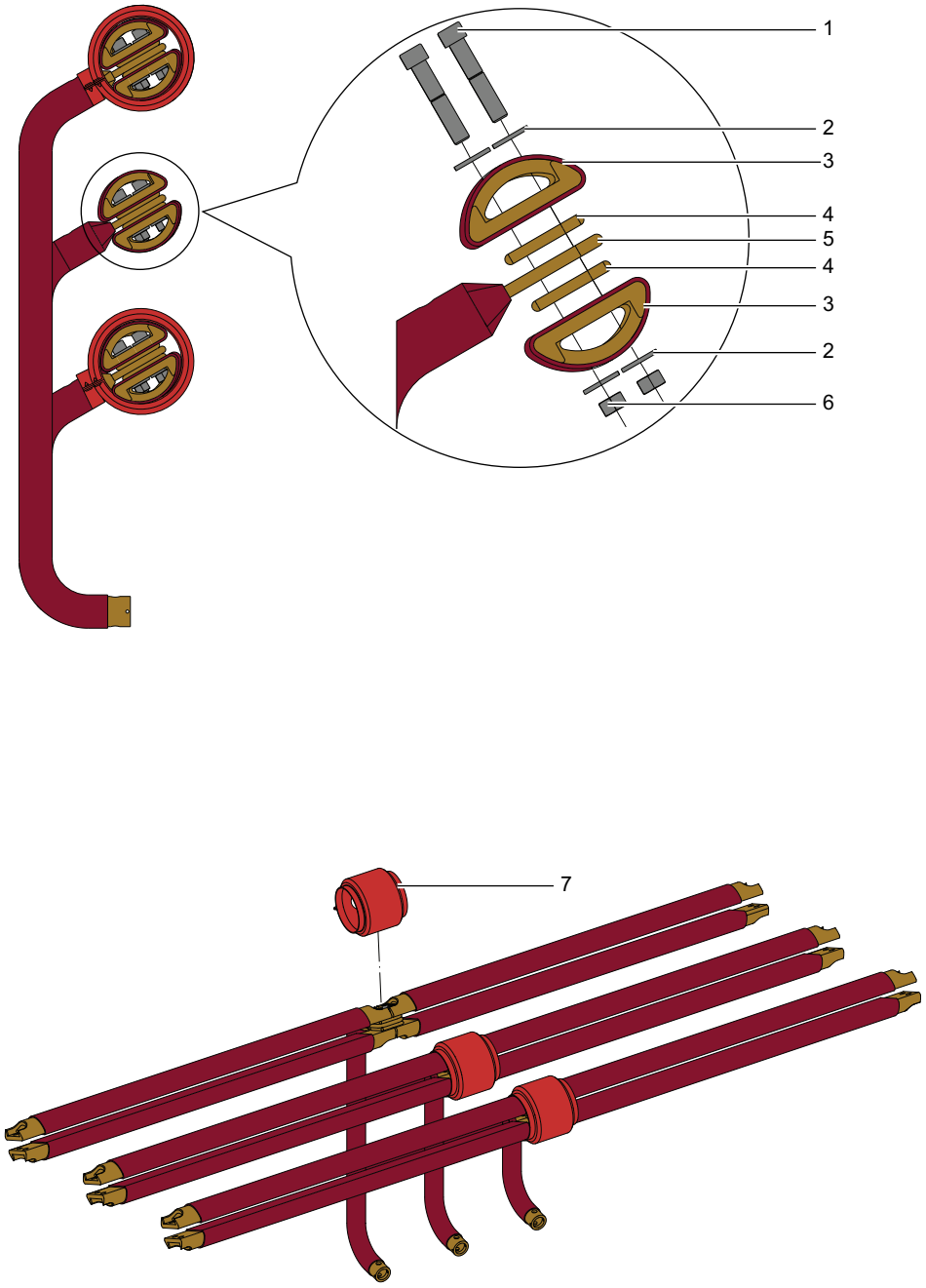

Figure 37
D Shape Busbar Arrangement of 4000 A for 1250 A Feeder with Tubular Droppers

1	Screw M12 x 65	5	Tubular dropper
2	Conical washer M12	6	Nut M12
3	D shape busbar	7	Boot(1)
4	Spacer		

(1) Boots are required for 95 kVp in MCSeT 12/17.5 kV.

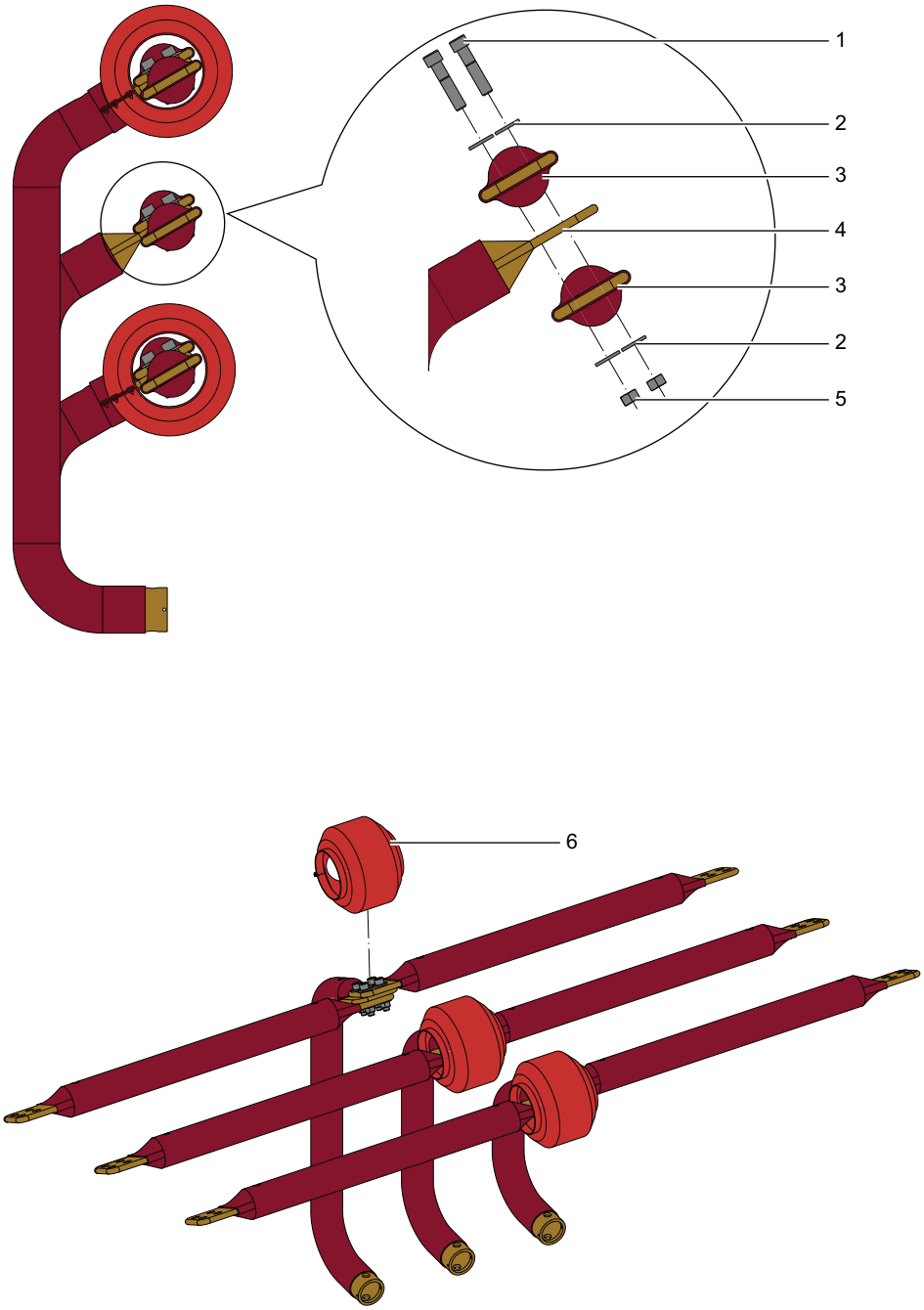

Figure 38
Tubular Busbar Arrangement of 2000 A for 2000 A Feeder with Tubular Droppers

1	Screw M12 x 50	4	Tubular dropper
2	Conical washer M12	5	Nut M12
3	Tubular busbar	6	Boot(1)

(1) Boots are required for 95 kVp in MCSeT 12/17.5 kV.

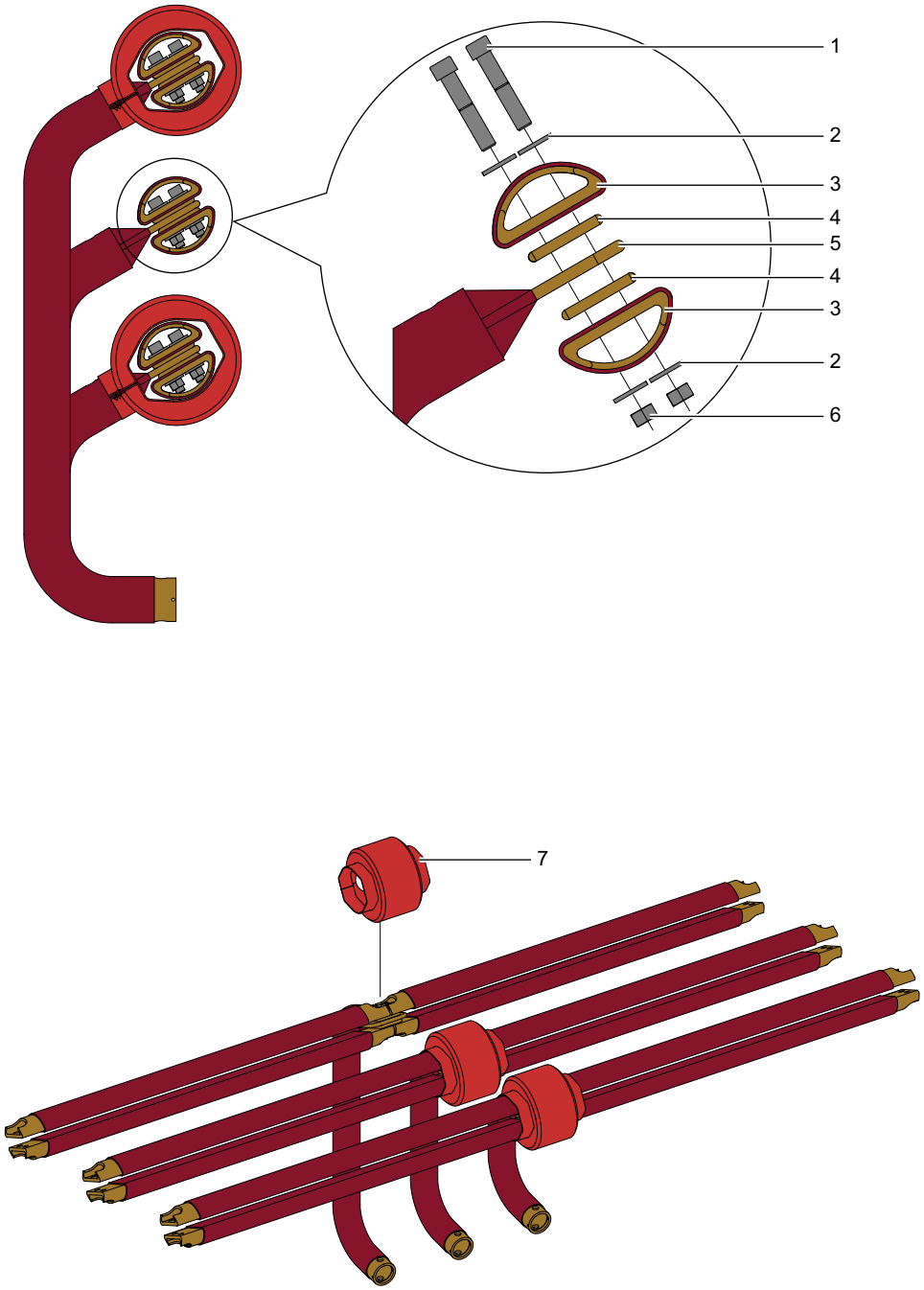

Figure 39
D Shape Busbar Arrangement of 2500 A for 2000 A Feeder with Tubular Droppers

1	Screw M12 x 55	5	Tubular dropper
2	Conical washer M12	6	Nut M12
3	D shape busbar	7	Boot(1)
4	Spacer		

(1) Boots are required for 95 kVp in MCSeT 12/17.5 kV.

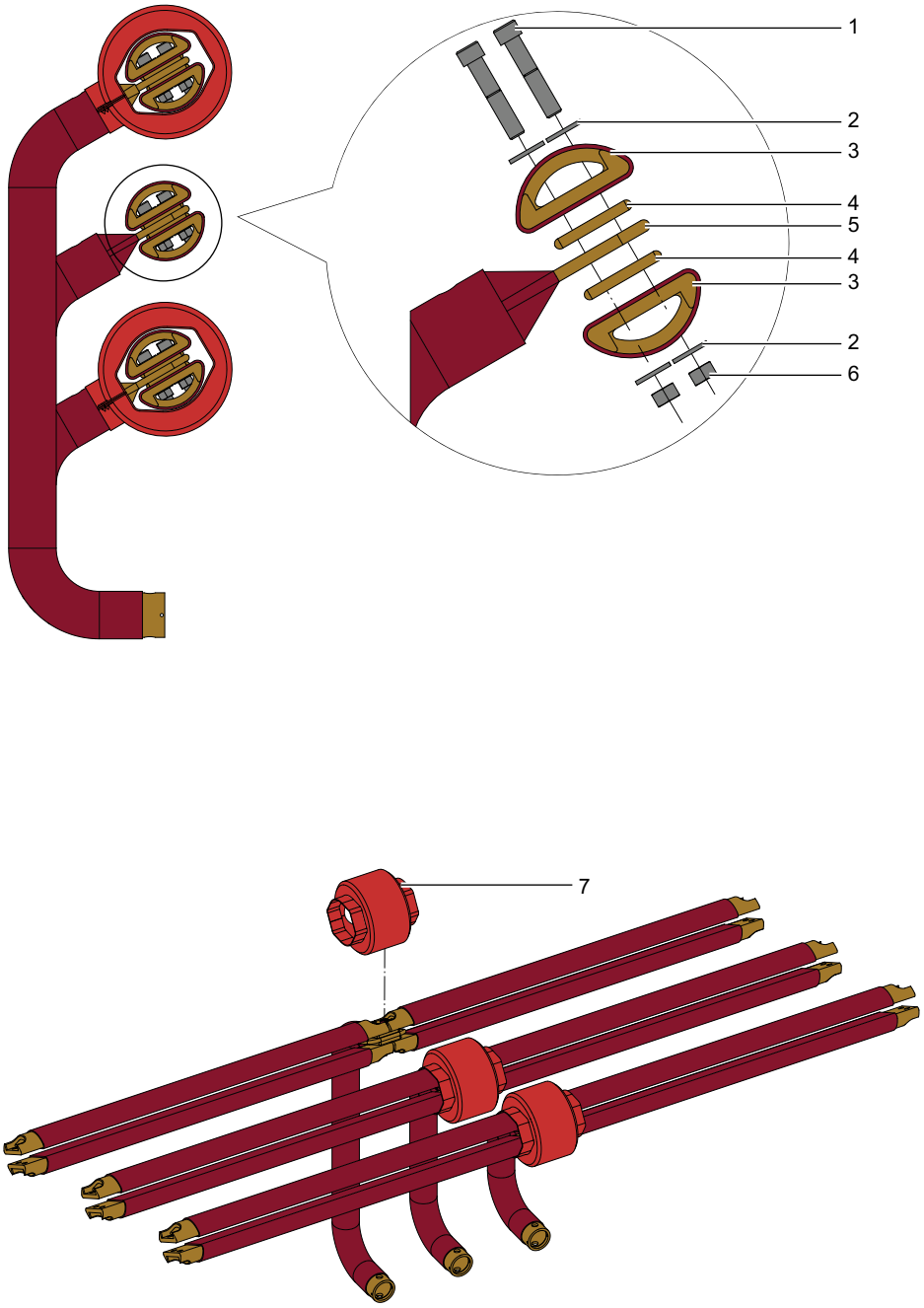

Figure 40
D Shape Busbar Arrangement of 4000 A for 2000 A Feeder with Tubular Droppers

1	Screw M12 x 65	5	Tubular dropper
2	Conical washer M12	6	Nut M12
3	D shape busbar	7	Boot(1)
4	Spacer		

(1) Boots are required for 95 kVp in MCSeT 12/17.5 kV.

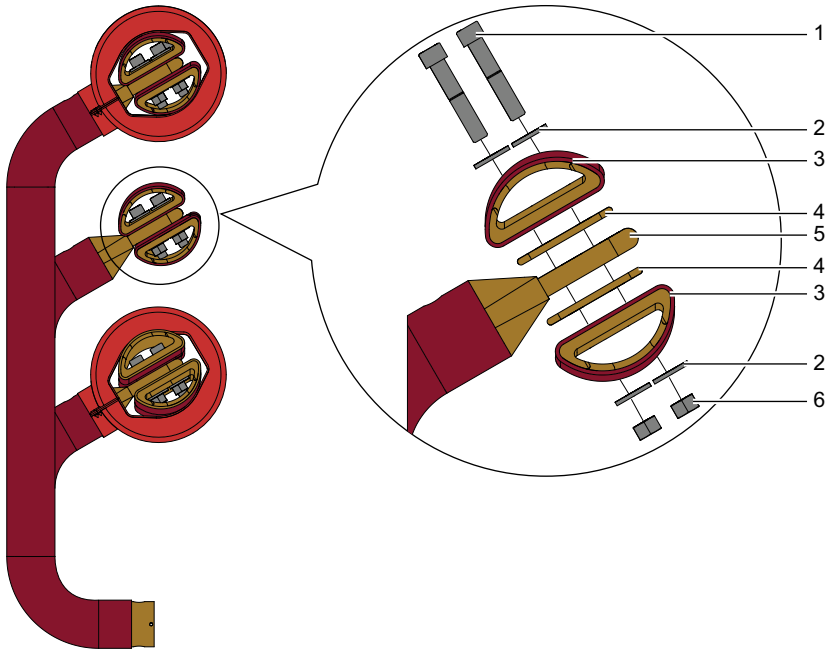

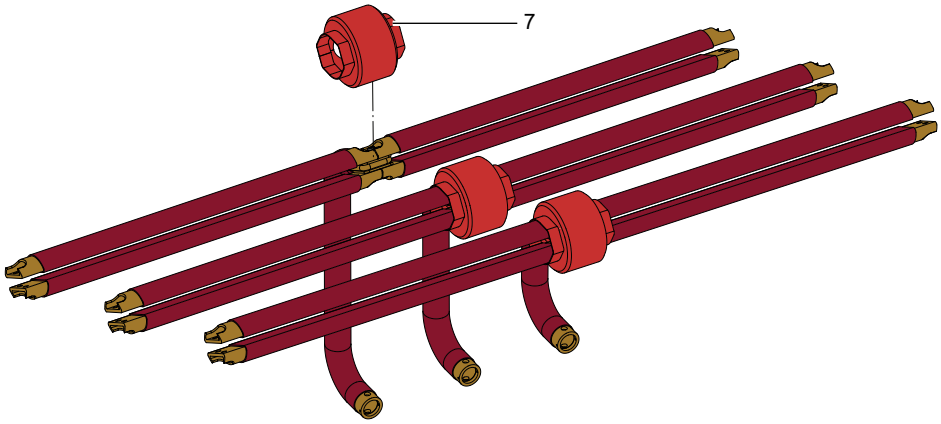

Figure 41
D Shape Busbar Arrangement of 2500 A for 2500 A Feeder with Tubular Droppers

1	Screw M12 x 55	5	Tubular dropper
2	Conical washer M12	6	Nut M12
3	D shape busbar	7	Boot(1)
4	Spacer		

(1) Boots are required for 95 kVp in MCSeT 12/17.5 kV.

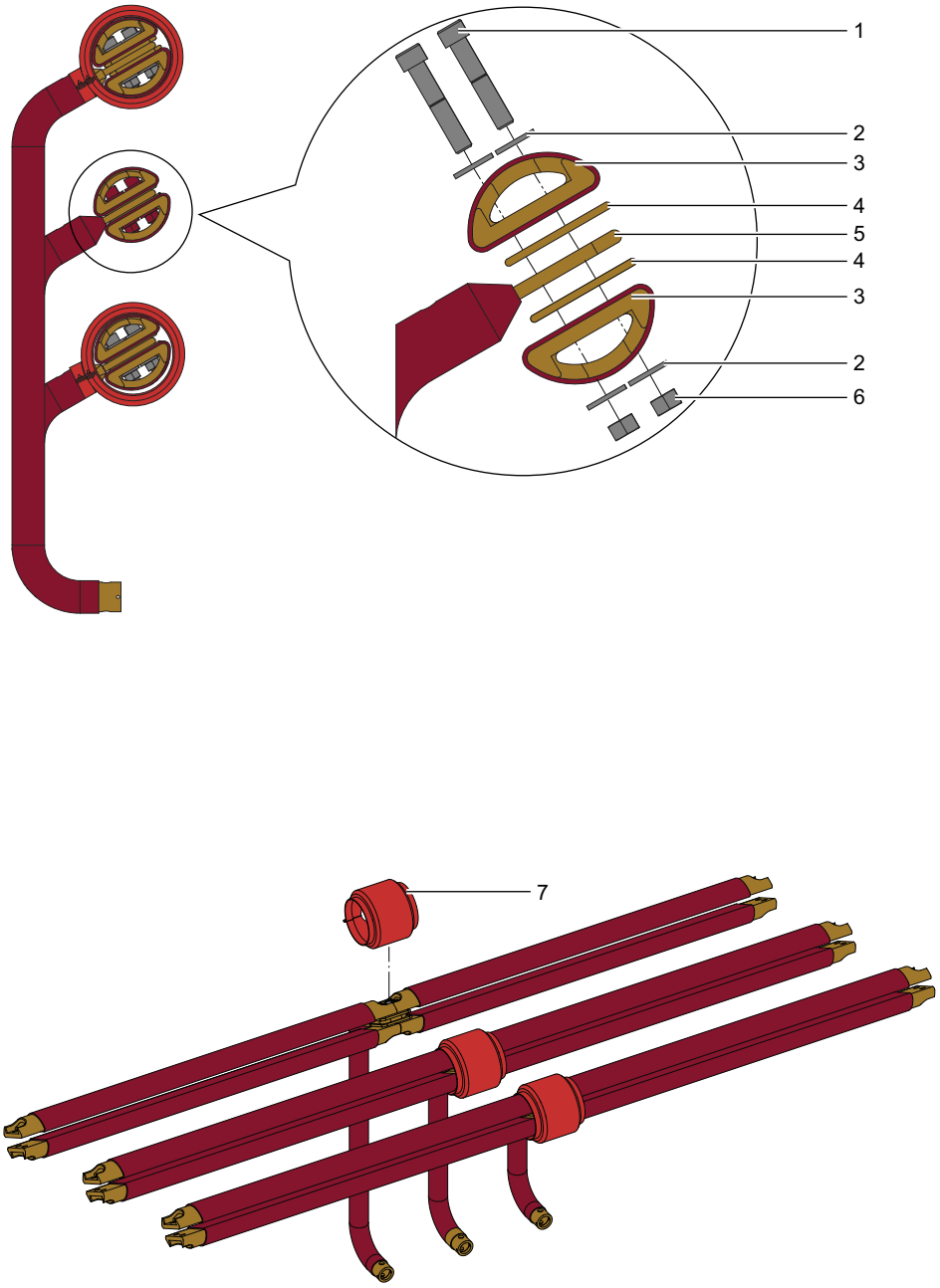

Figure 42
D Shape Busbar Arrangement of 4000 A for 2500 A Feeder with Tubular Droppers

1	Screw M12 x 65	5	Tubular dropper
2	Conical washer M12	6	Nut M12
3	D shape busbar	7	Boot(1)
4	Spacer		

(1) Boots are required for 95 kVp in MCSeT 12/17.5 kV.

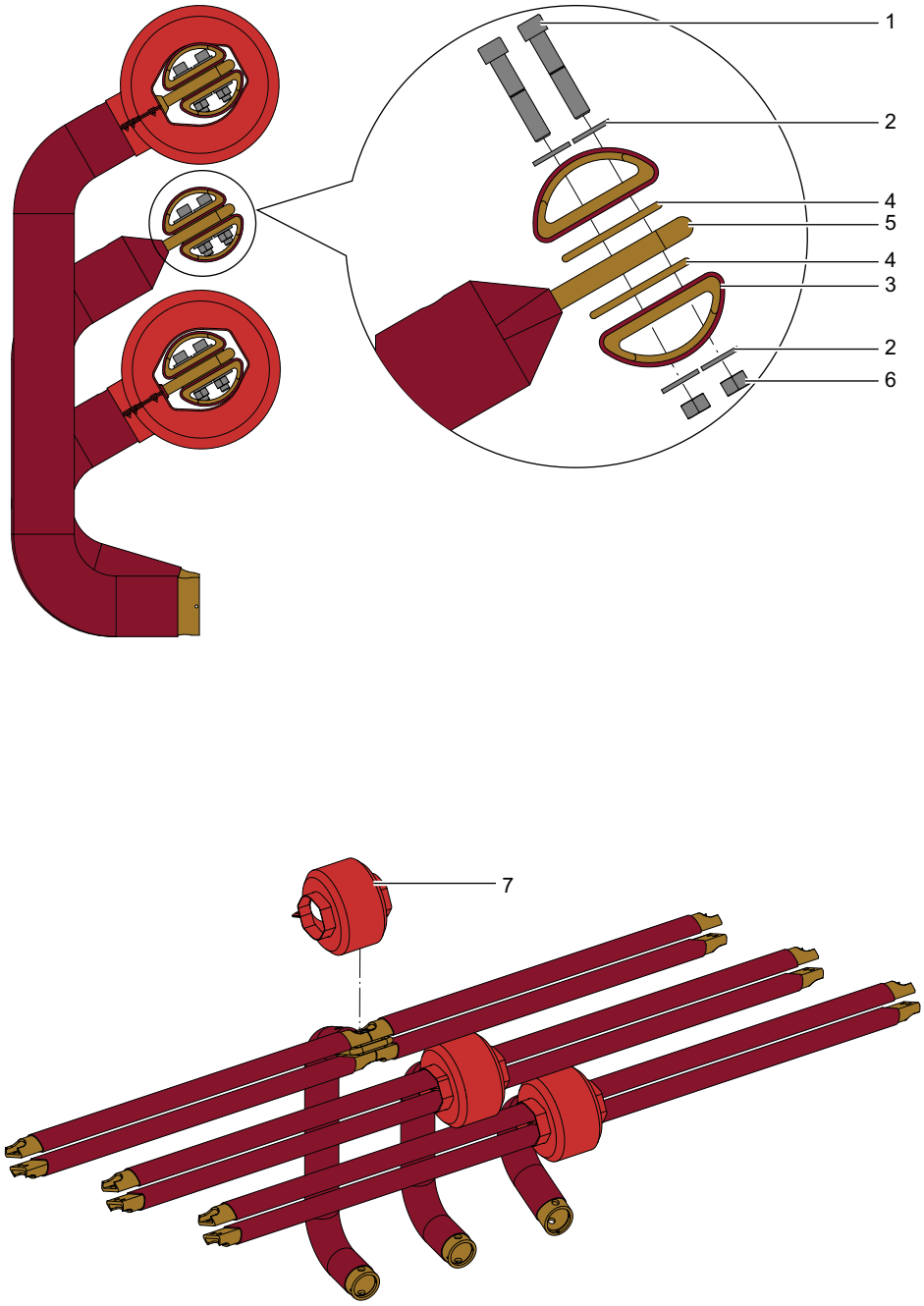

Figure 43
D Shape Busbar Arrangement of 3150 A for 3150 A Feeder with Tubular Droppers

1	Screw M12 x 65	5	Tubular dropper
2	Conical washer M12	6	Nut M12
3	D shape busbar	7	Boot(1)
4	Spacer		

(1) Boots are required for 95 kVp in MCSeT 12/17.5 kV.

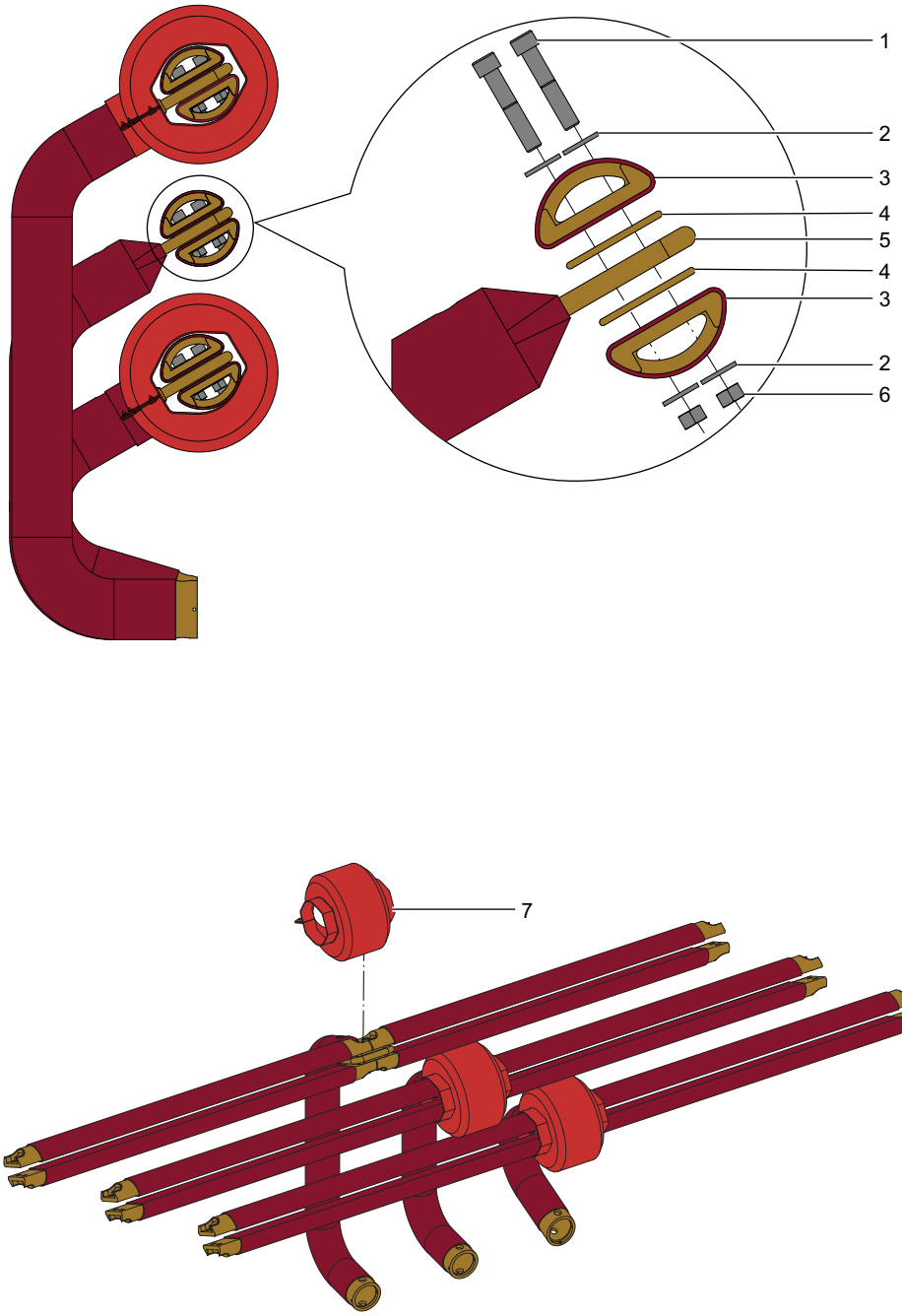

Figure 44
D Shape Busbar Arrangement of 4000 A for 3150 A Feeder with Tubular Droppers

1	Screw M12 x 65	5	Tubular dropper
2	Conical washer M12	6	Nut M12
3	D shape busbar	7	Boot(1)
4	Spacer		

(1) Boots are required for 95 kVp in MCSeT 12/17.5 kV.

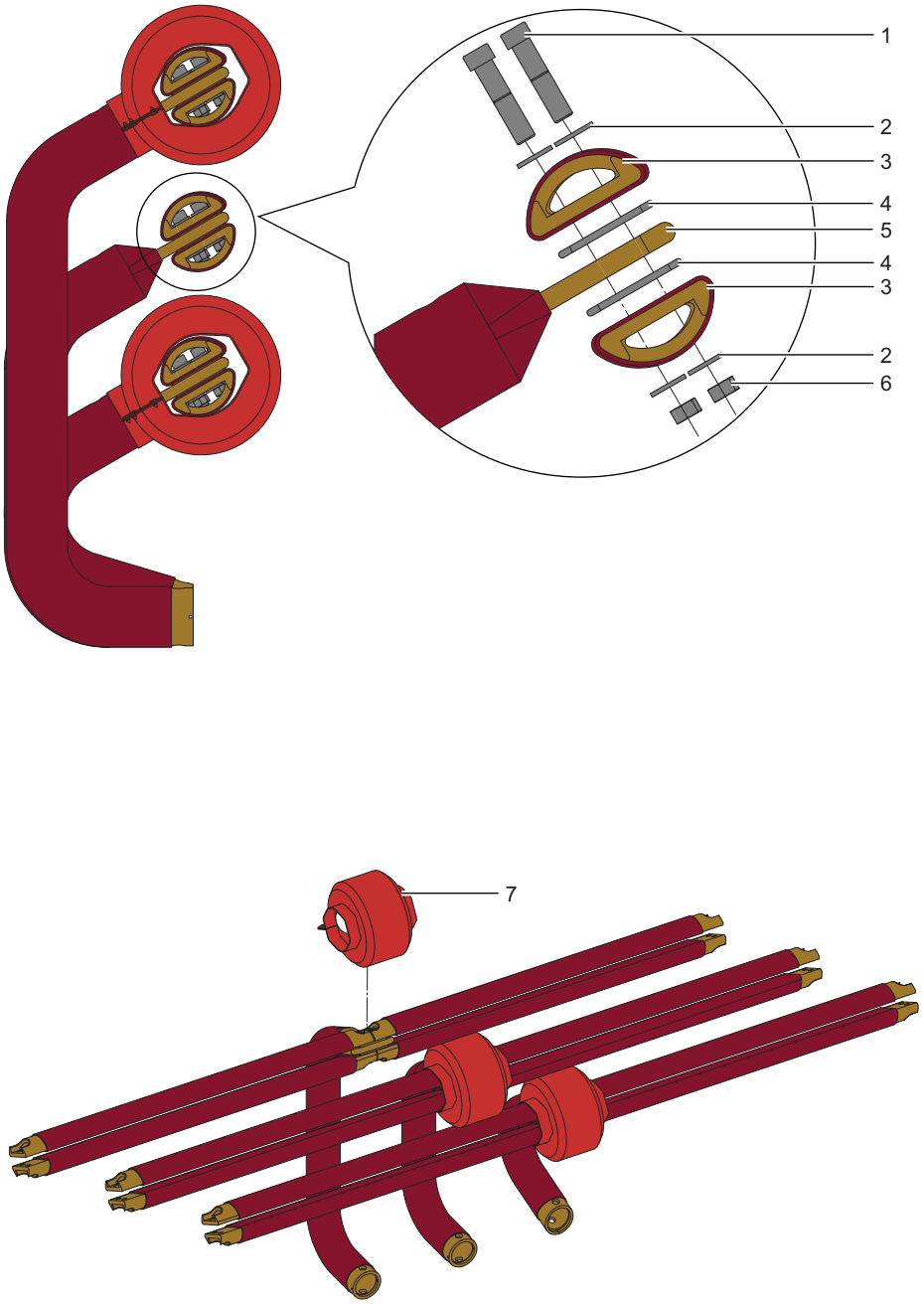

Figure 45
D Shape Busbar Arrangement of 4000 A for 4000 A Feeder with Tubular Droppers

1	Screw M12 x 65	5	Tubular dropper
2	Conical washer M12	6	Nut M12
3	D shape busbar	7	Boot(1)
4	Spacer		

(1) Boots are required for 95 kVp in MCSeT 12/17.5 kV.

Center Cubicle – 24 kV

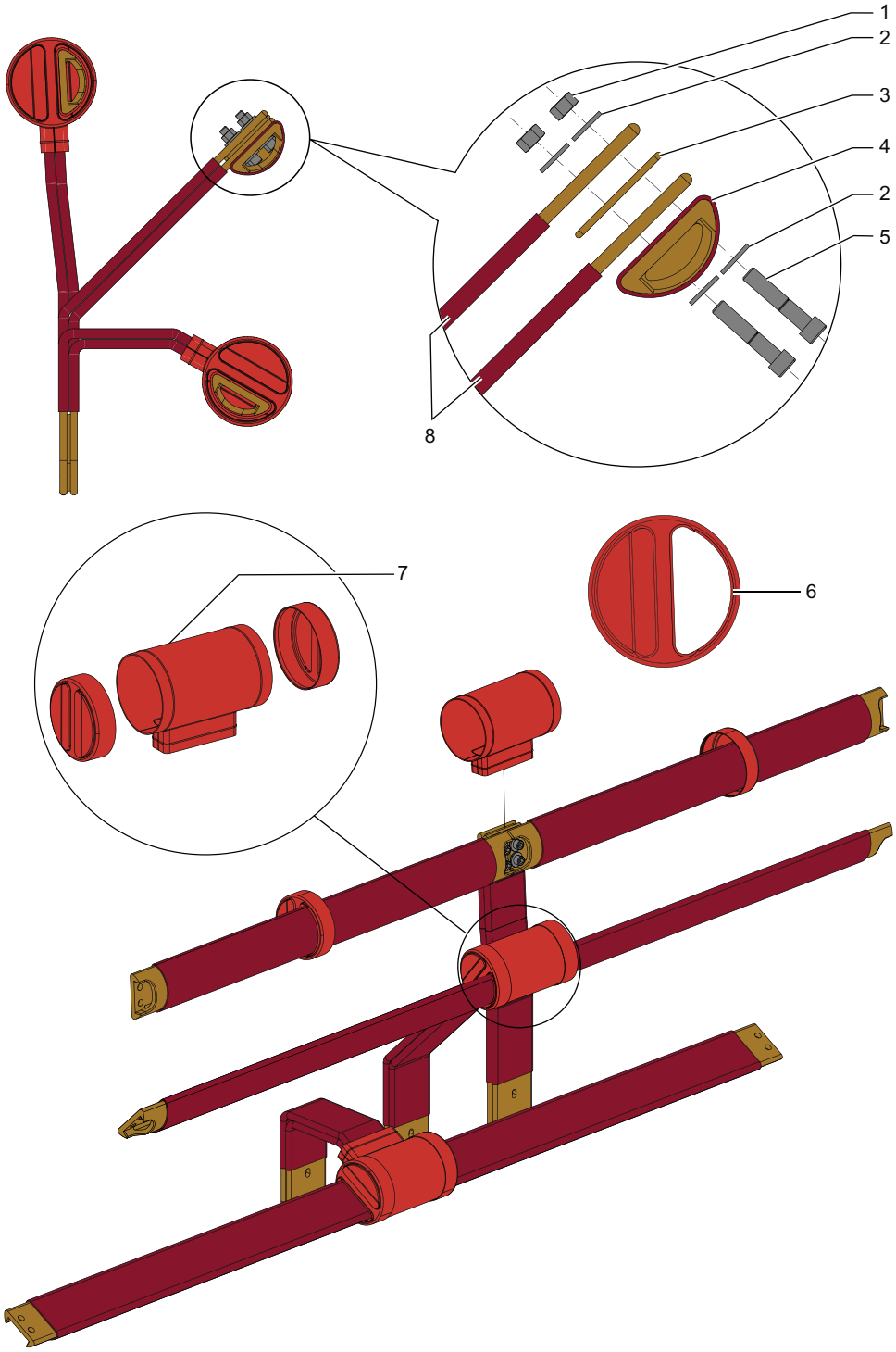

Figure 46
D Shape Busbar Arrangement of 2500 A for 2500 A Feeder

1	Nut M12	5	Bolt M12 x 60
2	Washer M12	6	Boot cover(1)
3	Spacer	7	Boot
4	D shape busbar	8	Droppers

(1) Knock-out the D-shaped busbar entry section from the boot cover on site.

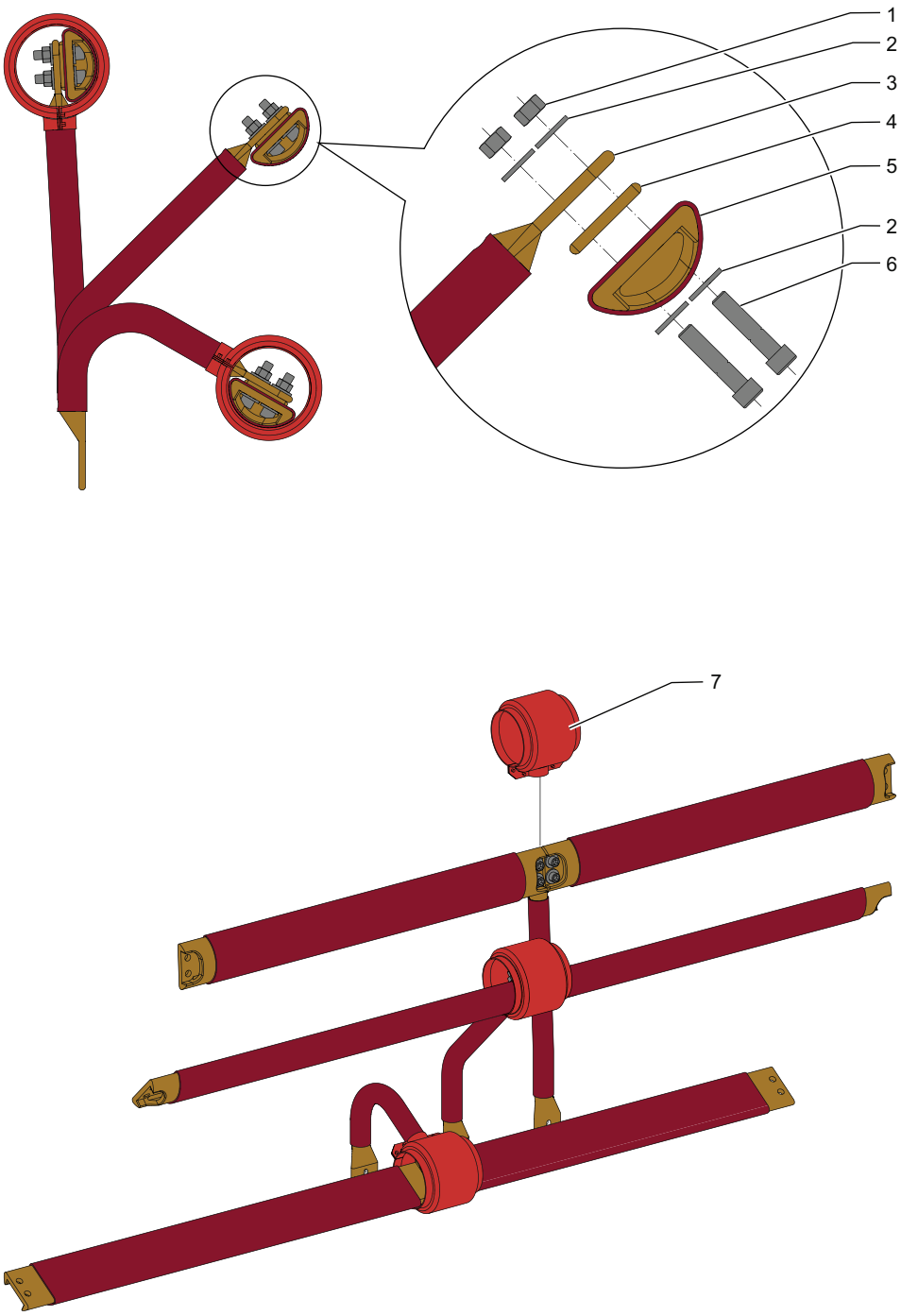

Figure 47
D Shape Busbar Arrangement of 2500 A for 1250 A Feeder

1	Nut M12	5	D shape busbar
2	Washer M12	6	Screw M12 x 55
3	Tubular dropper	7	Boot
4	Spacer		

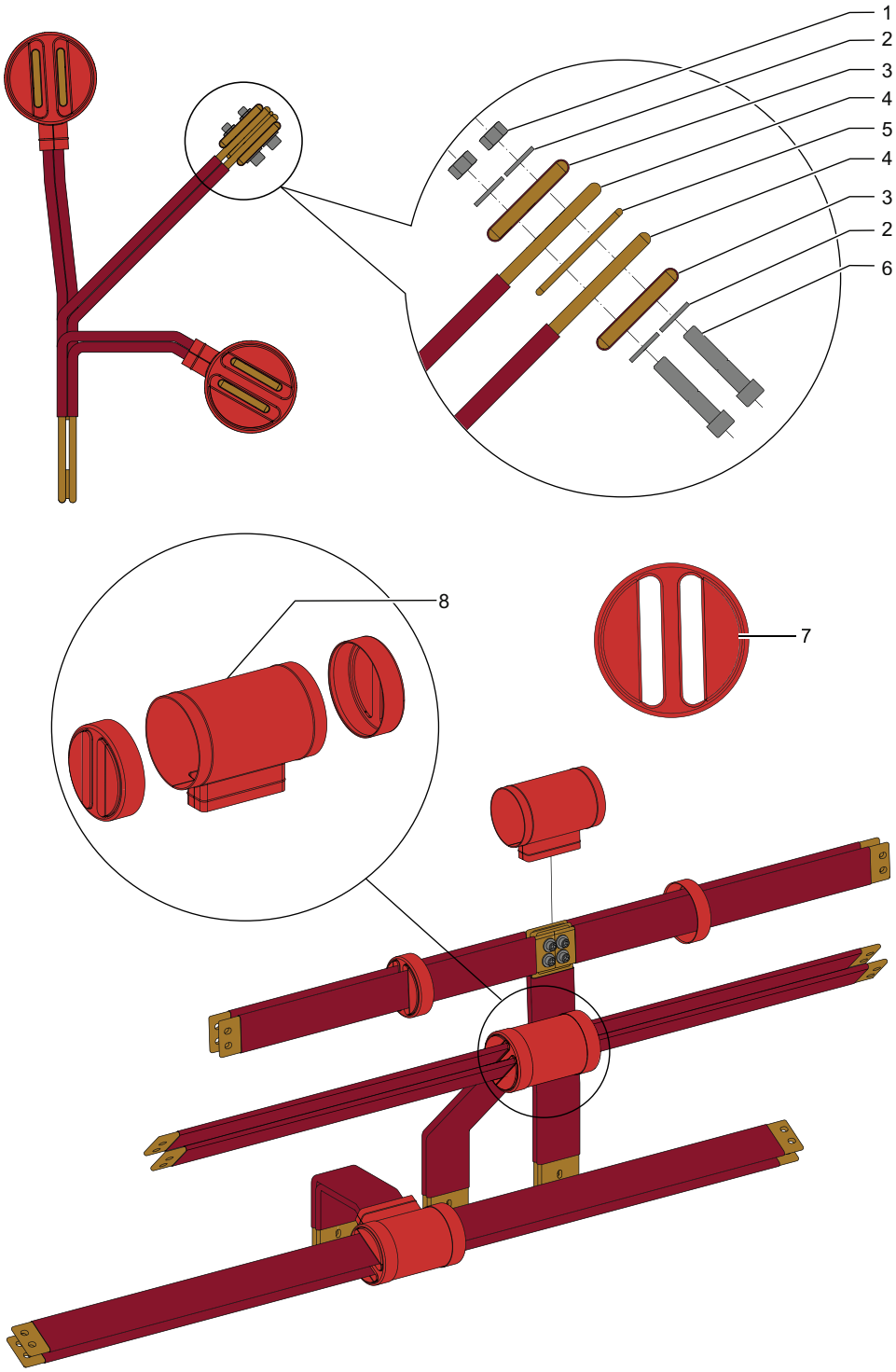

Figure 48
Flat Busbar Arrangement of 2500 A for 2500 A Feeder

1	Nut M12	5	Spacer
2	Washer M12	6	Screw M12 x 70
3	Flat busbar	7	Boot cover(1)
4	Droppers	8	Boot

(1) Knock-out the flat busbar entry section from the boot cover on site.

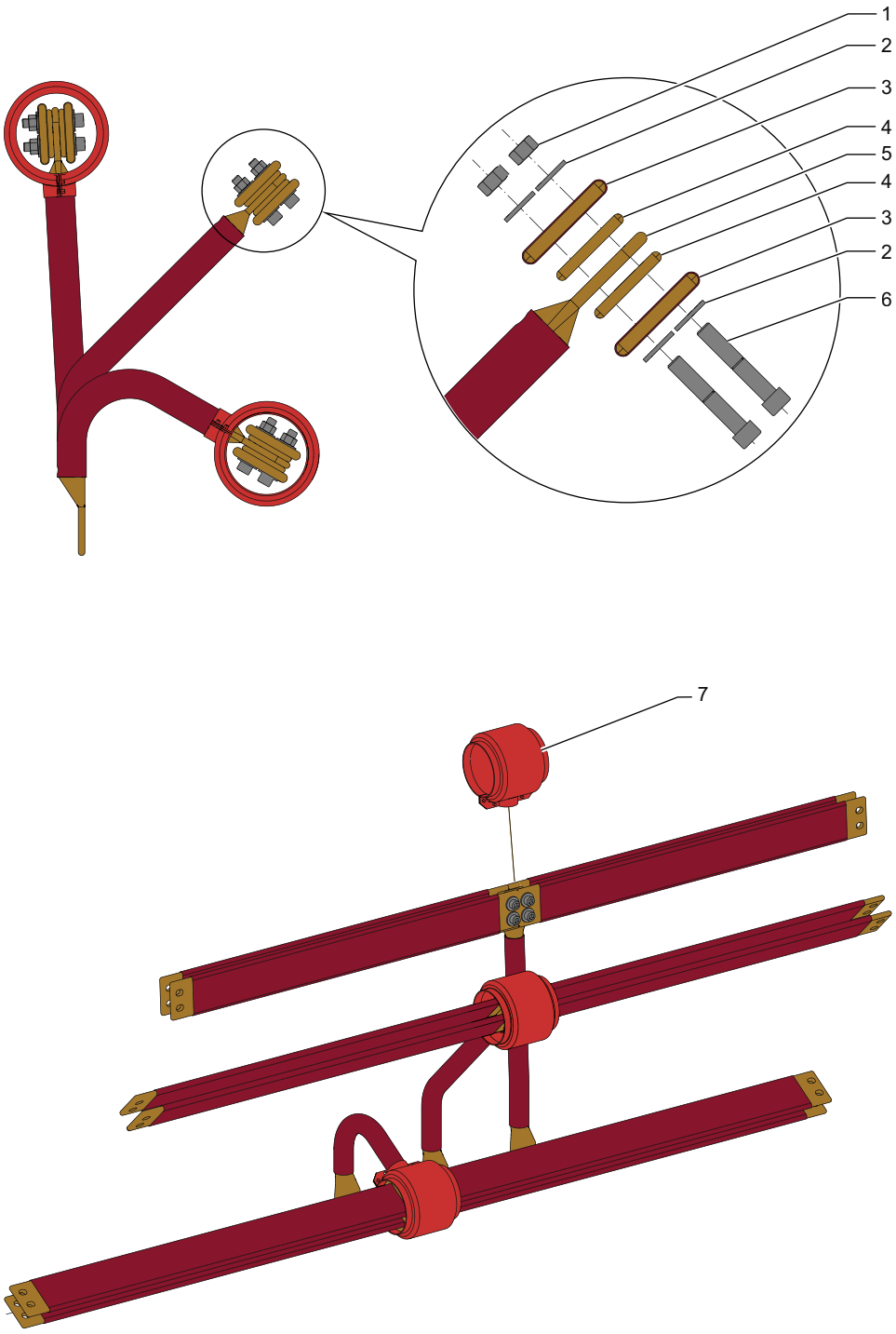

Figure 49
Flat Busbar Arrangement of 2500 A for 1250 A Feeder with Tubular Droppers

1	Nut M12	5	Tubular dropper
2	Washer M12	6	Screw M12 x 70
3	Flat busbar	7	Boot
4	Spacer		

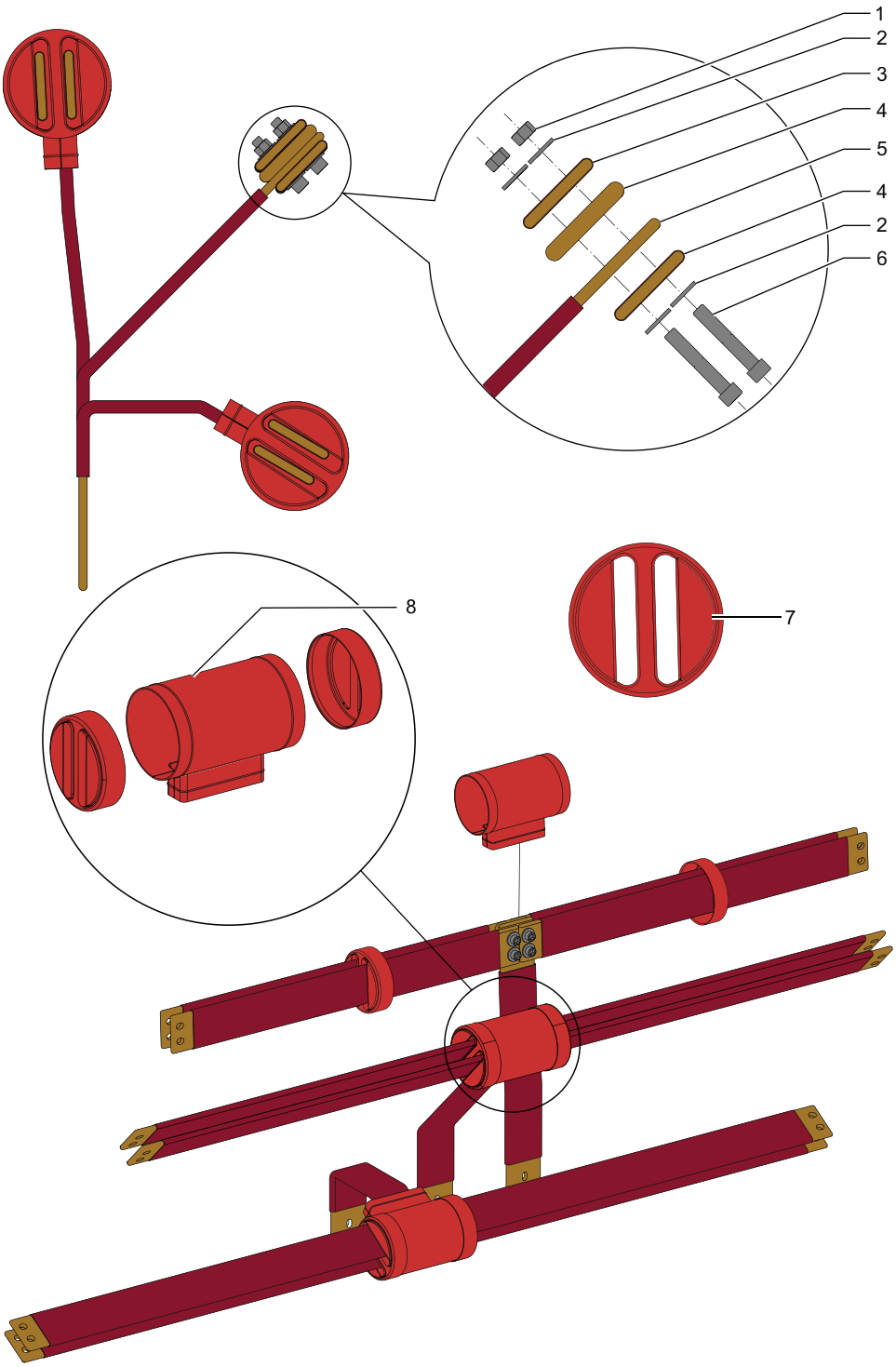

Figure 50
Flat Busbar Arrangement of 2500 A for 1250 A Feeder with Flat Droppers

1	Nut M12	5	Flat dropper
2	Washer M12	6	Screw M12 x 60
3	Flat busbar	7	Boot cover(1)
4	Spacer	8	Boot

(1) Knock-out the flat busbar entry section from the boot cover on site.

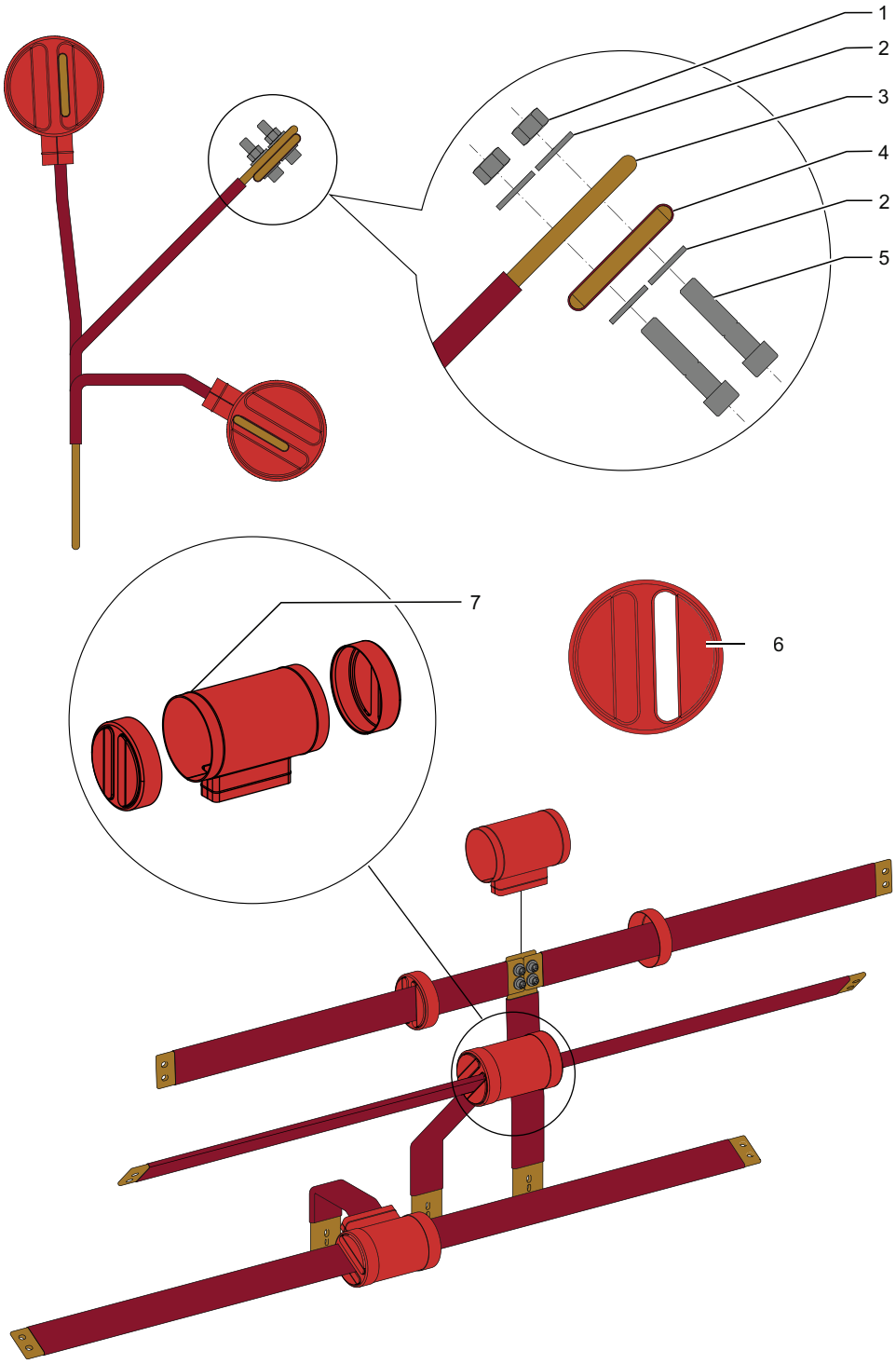

Figure 51
Flat Busbar Arrangement of 1250 A for 1250 A Feeder with Flat Droppers

1	Nut M12	5	Screw M12 x 55
2	Washer M12	6	Boot cover(1)
3	Flat dropper	7	Boot
4	Flat busbar		

(1) Knock-out the flat busbar entry section from the boot cover on site.

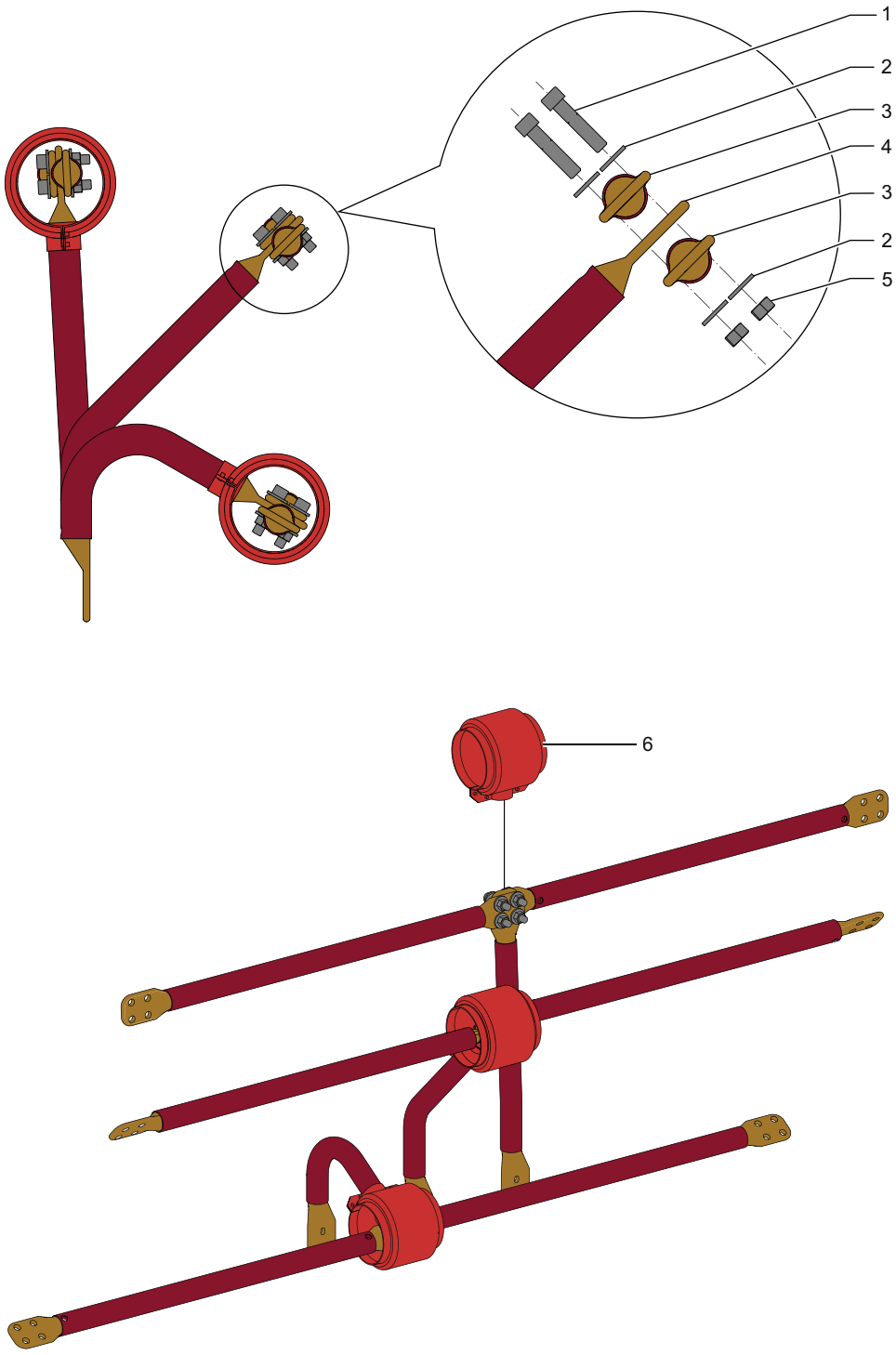

Figure 52
Tubular Busbar Arrangement of 1250 A for 1250 A Feeder with Tubular Droppers

1	Screw M12 x 55	4	Tubular dropper
2	Washer M12	5	Nut M12
3	Tubular busbar	6	Boot

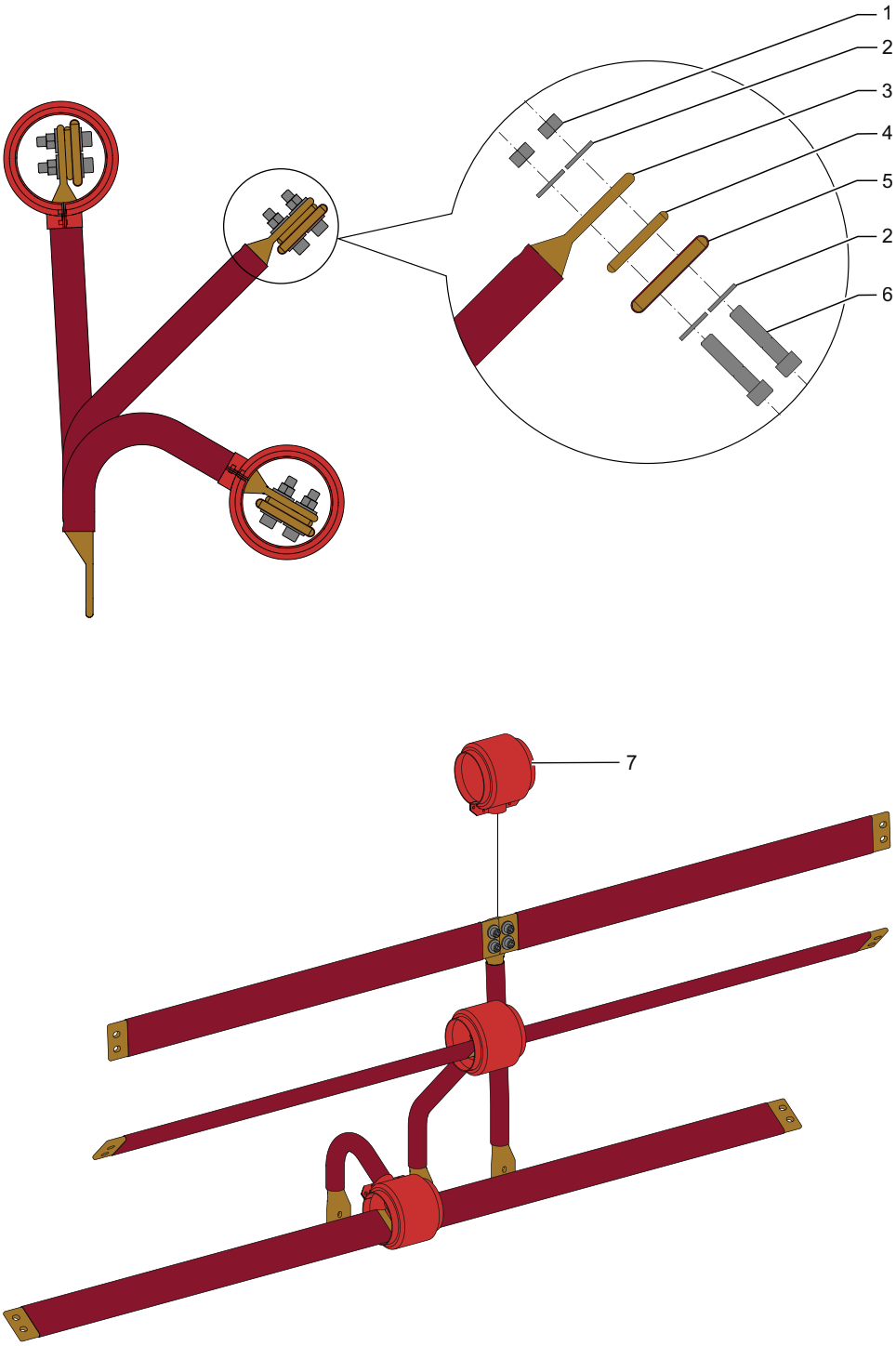

Figure 53
Flat Busbar Arrangement of 1250 A for 1250 A Feeder with Tubular Droppers

1	Nut M12	5	Flat droppers
2	Washer M12	6	Screw M12 x 55
3	Tubular dropper	7	**Boot**
4	Spacer		

End Cubicle

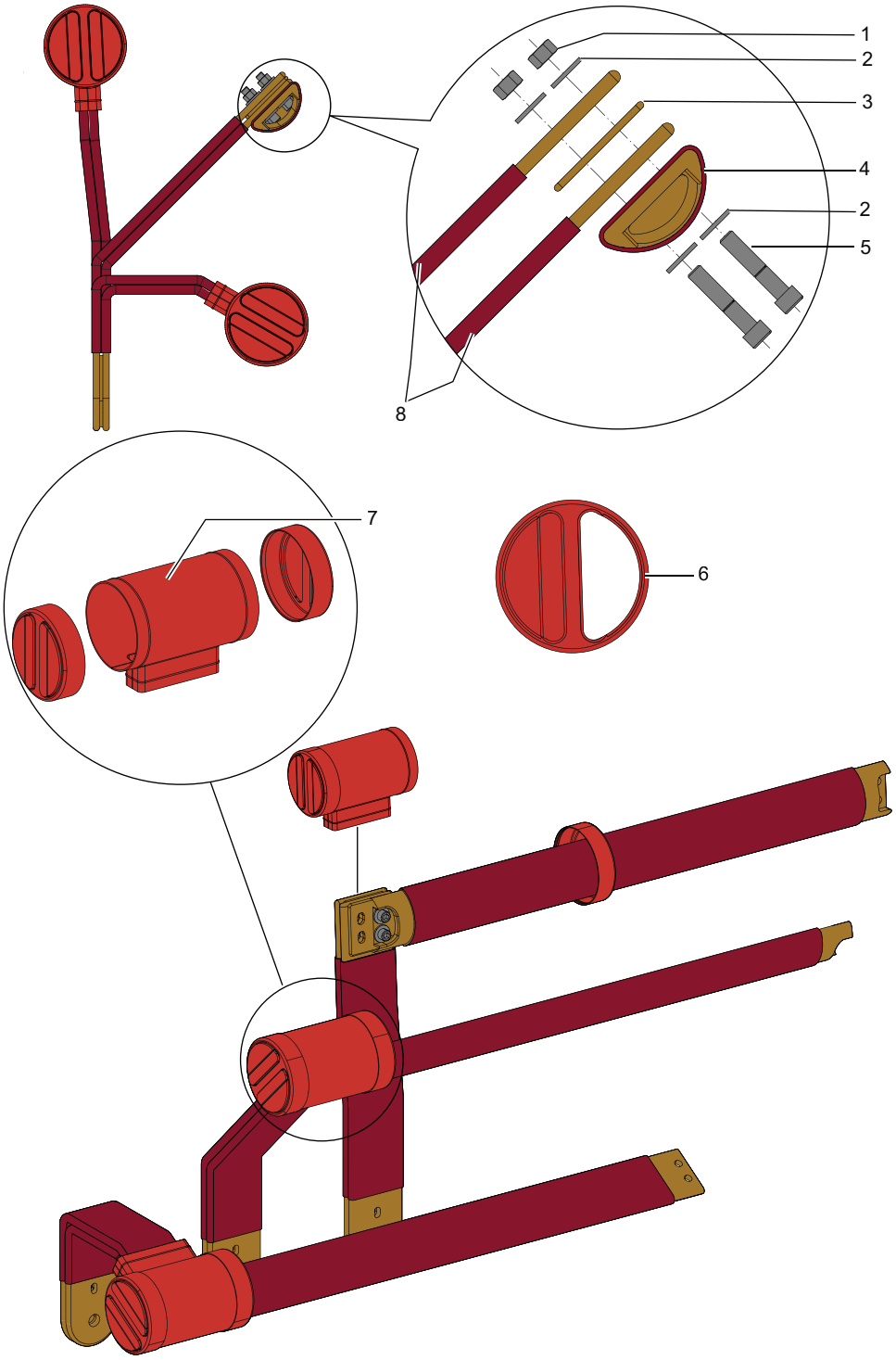

Figure 54
D Shape Busbar Arrangement of 2500 A for 2500 A Feeder

1	Nut M12	5	Bolt M12 x 60
2	Washer M12	6	Boot cover(1)
3	Spacer	7	Boot
4	D shape busbar	8	Droppers

(1) Knock-out the D-shaped busbar entry section from the boot cover on site.

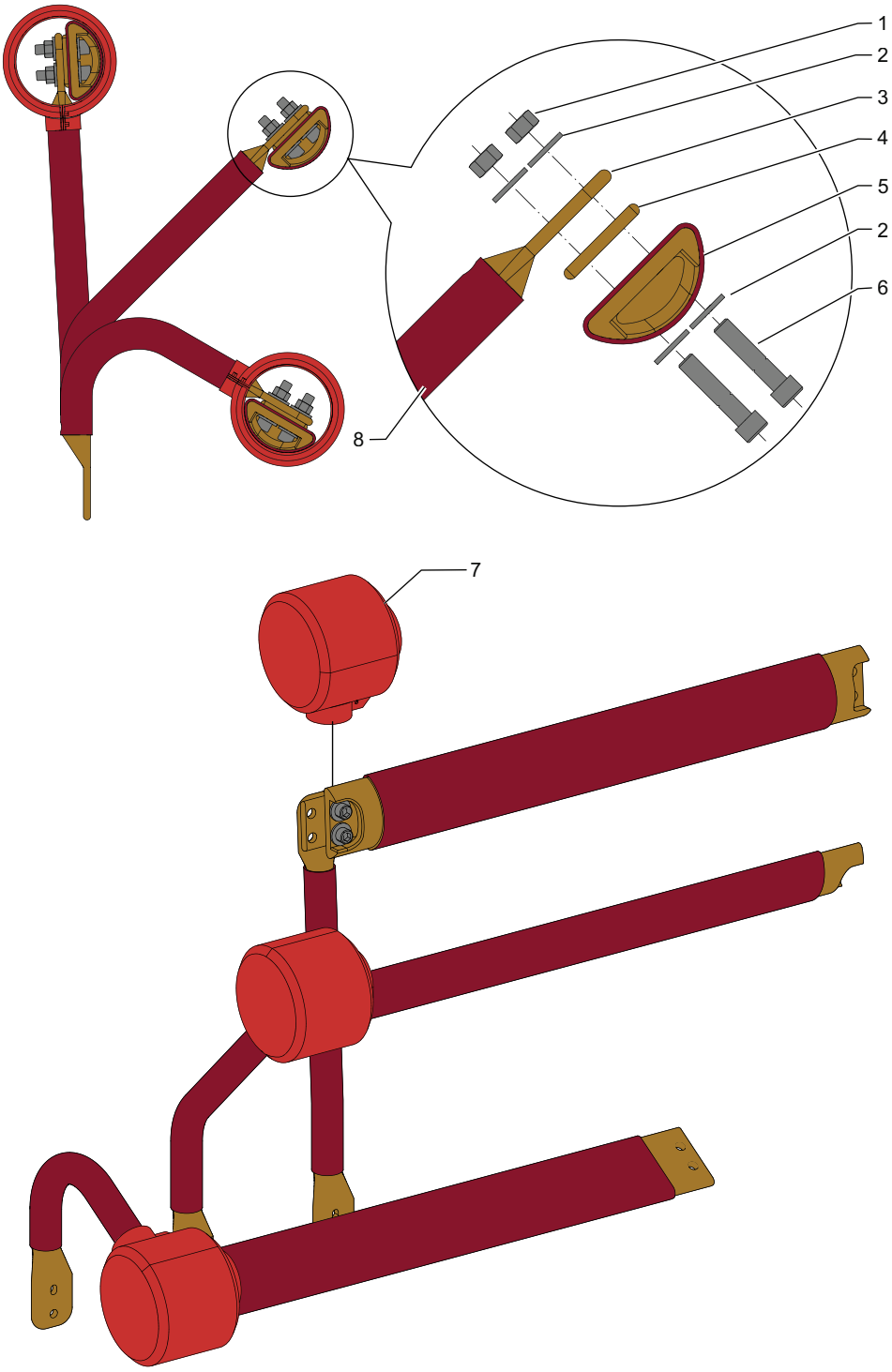

Figure 55
D Shape Busbar Arrangement of 2500 A for 1250 A Feeder

1	Nut M12	5	D shape busbar
2	Washer M12	6	Screw M12 x 55
3	Tubular dropper	7	Boot
4	Spacer		

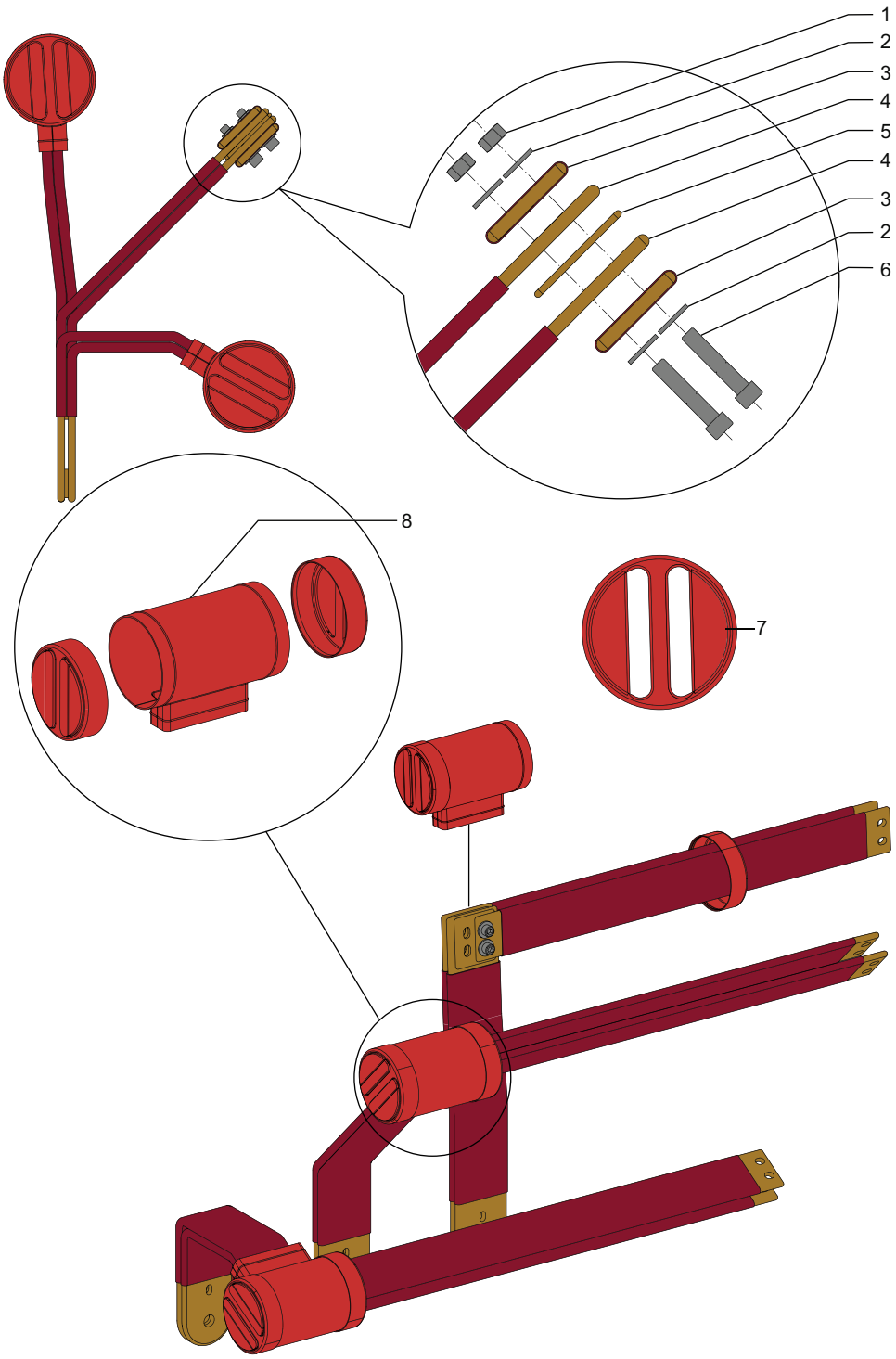

Figure 56
Flat Busbar Arrangement of 2500 A for 2500 A Feeder

1	Nut M12	5	Spacer
2	Washer M12	6	Screw M12 x 70
3	Flat busbar	7	Boot cover(1)
4	Droppers	8	Boot

(1) Knock-out the flat busbar entry section from the boot cover on site.

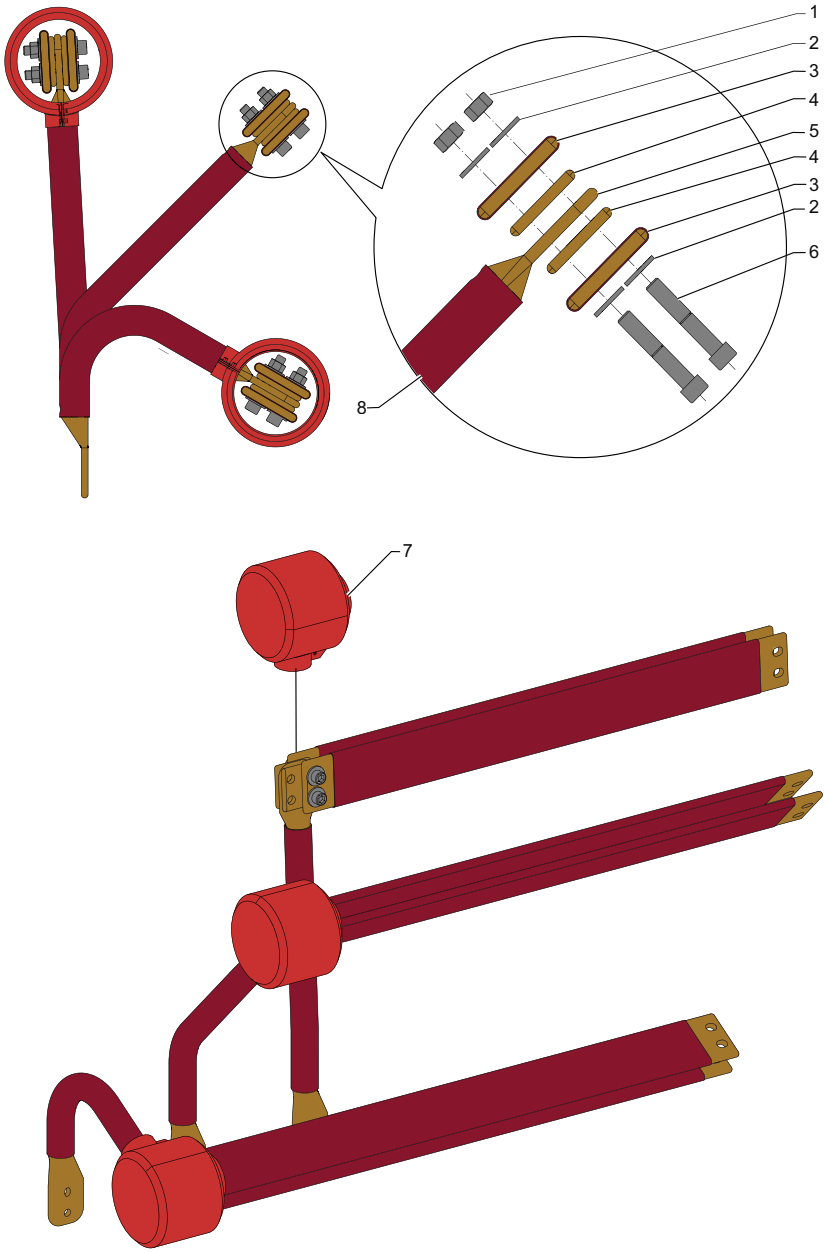

Figure 57
Flat Busbar Arrangement of 2500 A for 1250 A Feeder with Tubular Droppers

1	Nut M12	5	Tubular dropper
2	Washer M12	6	Screw M12 x 70
3	Flat busbar	7	Boot
4	Spacer		

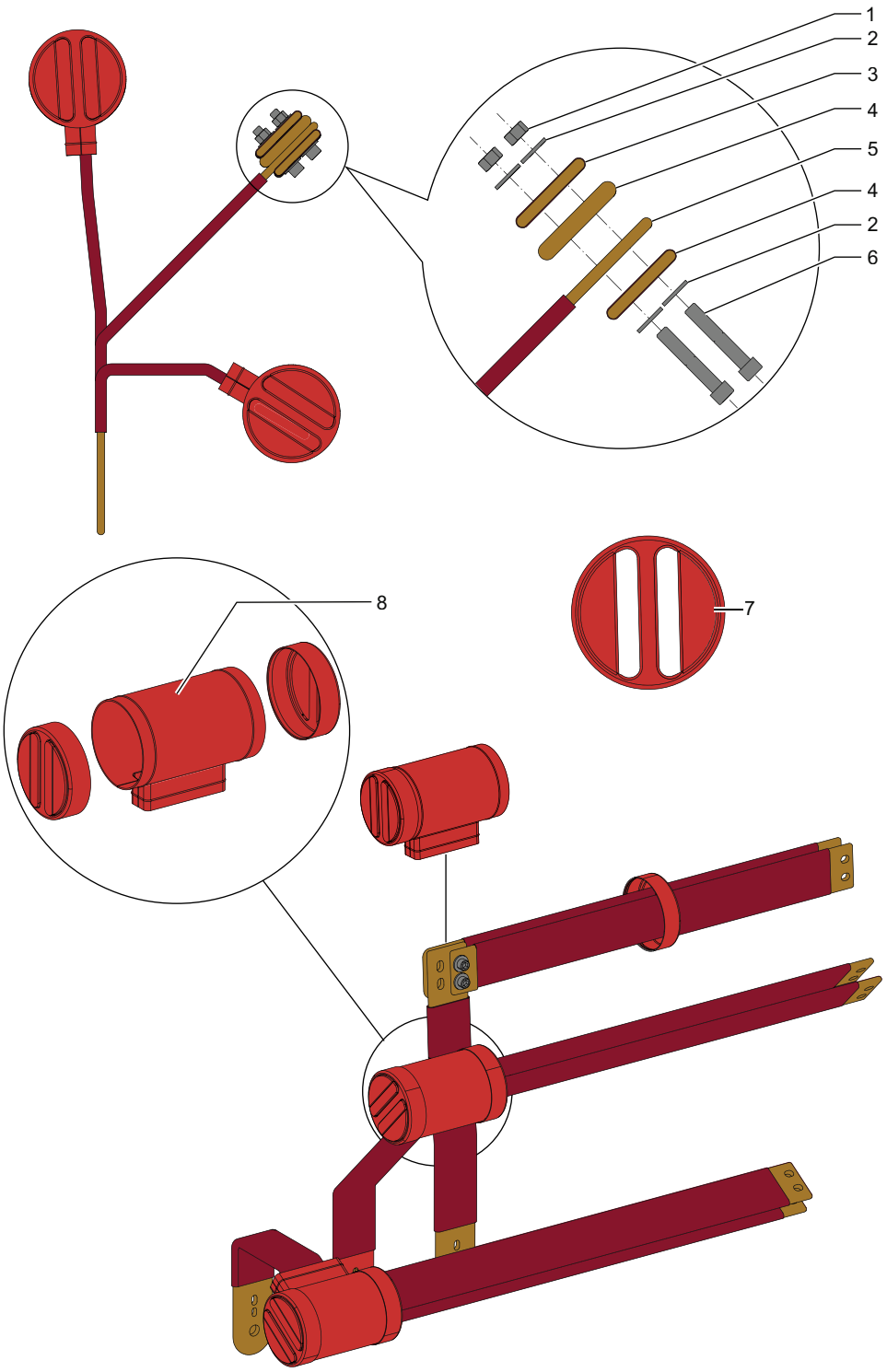

Figure 58
Flat Busbar Arrangement of 2500 A for 1250 A Feeder with Flat Droppers

1	Nut M12	5	Flat dropper
2	Washer M12	6	Screw M12 x 60
3	Flat busbar	7	Boot cover(1)
4	Spacer	8	Boot

(1) Knock-out the flat busbar entry section from the boot cover on site.

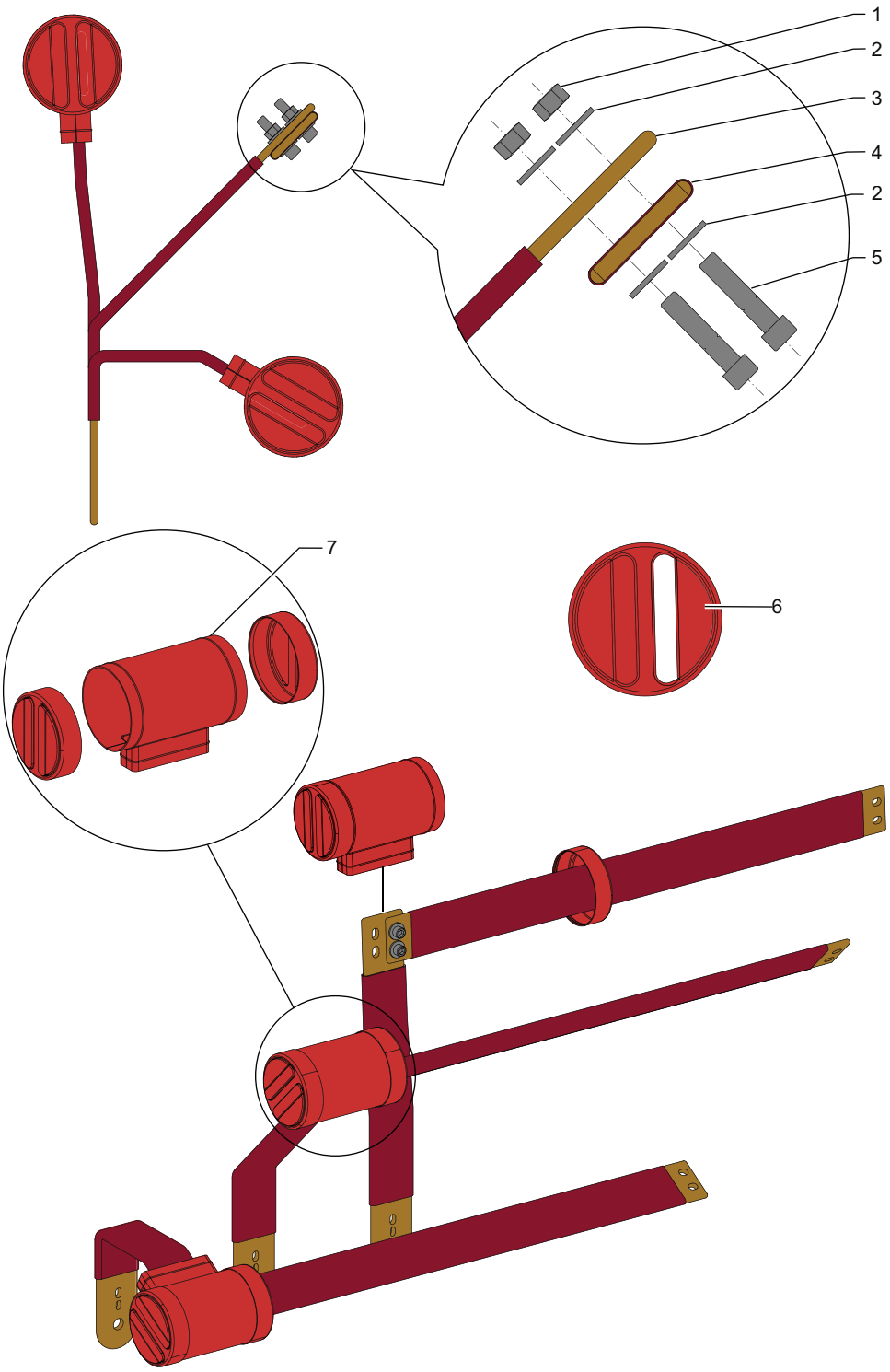

Figure 59
Flat Busbar Arrangement of 1250 A for 1250 A Feeder with Flat Droppers

1	Nut M12	5	Screw M12 x 55
2	Washer M12	6	Boot cover(1)
3	Flat dropper	7	Boot
4	Flat busbar		

(1) Knock-out the flat busbar entry section from the boot cover on site.

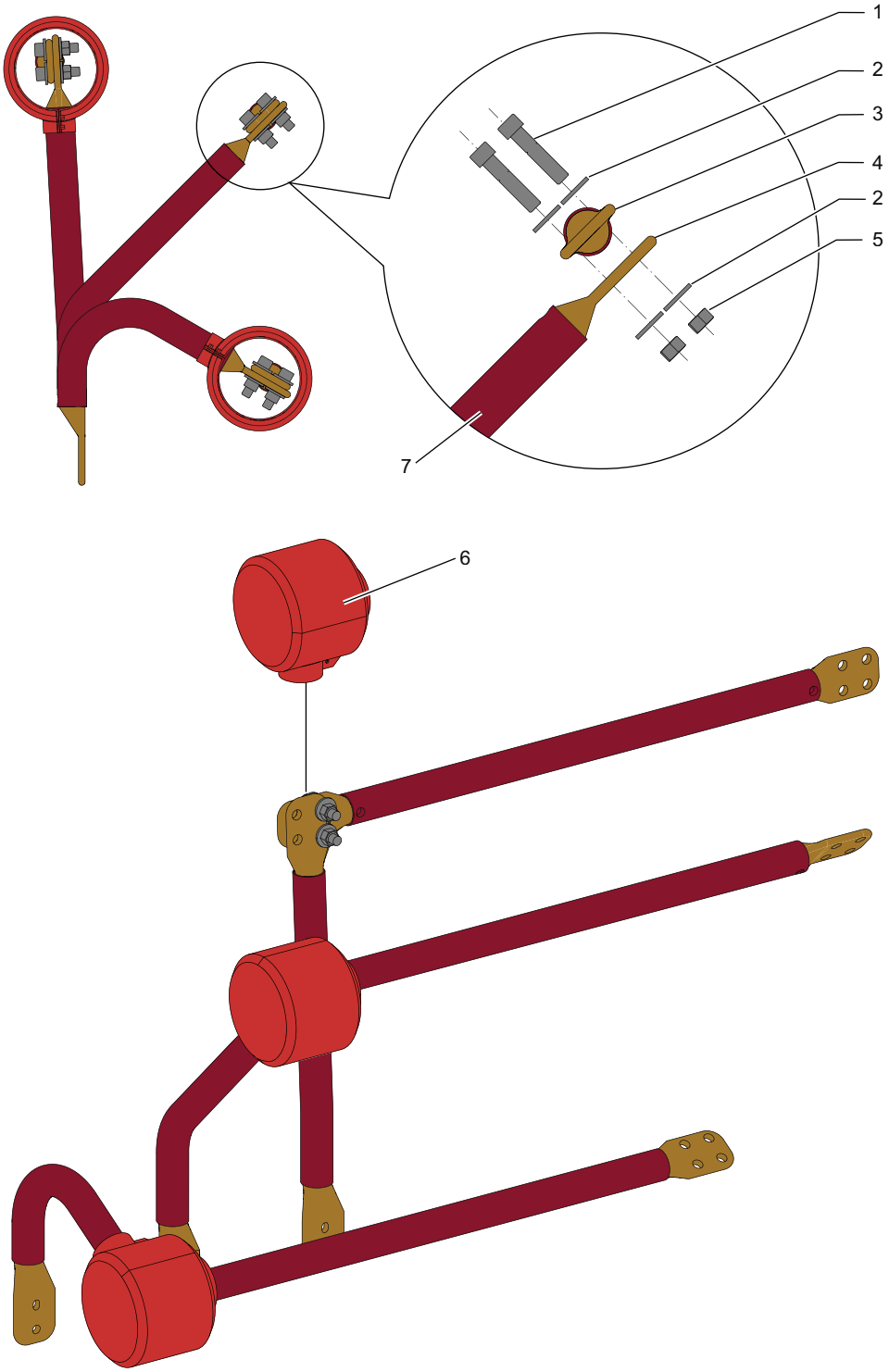

Figure 60
Tubular Busbar Arrangement of 1250 A for 1250 A Feeder with Tubular Droppers

1	Screw M12 x 55	4	Tubular dropper
2	Washer M12	5	Nut M12
3	Tubular busbar	6	Boot

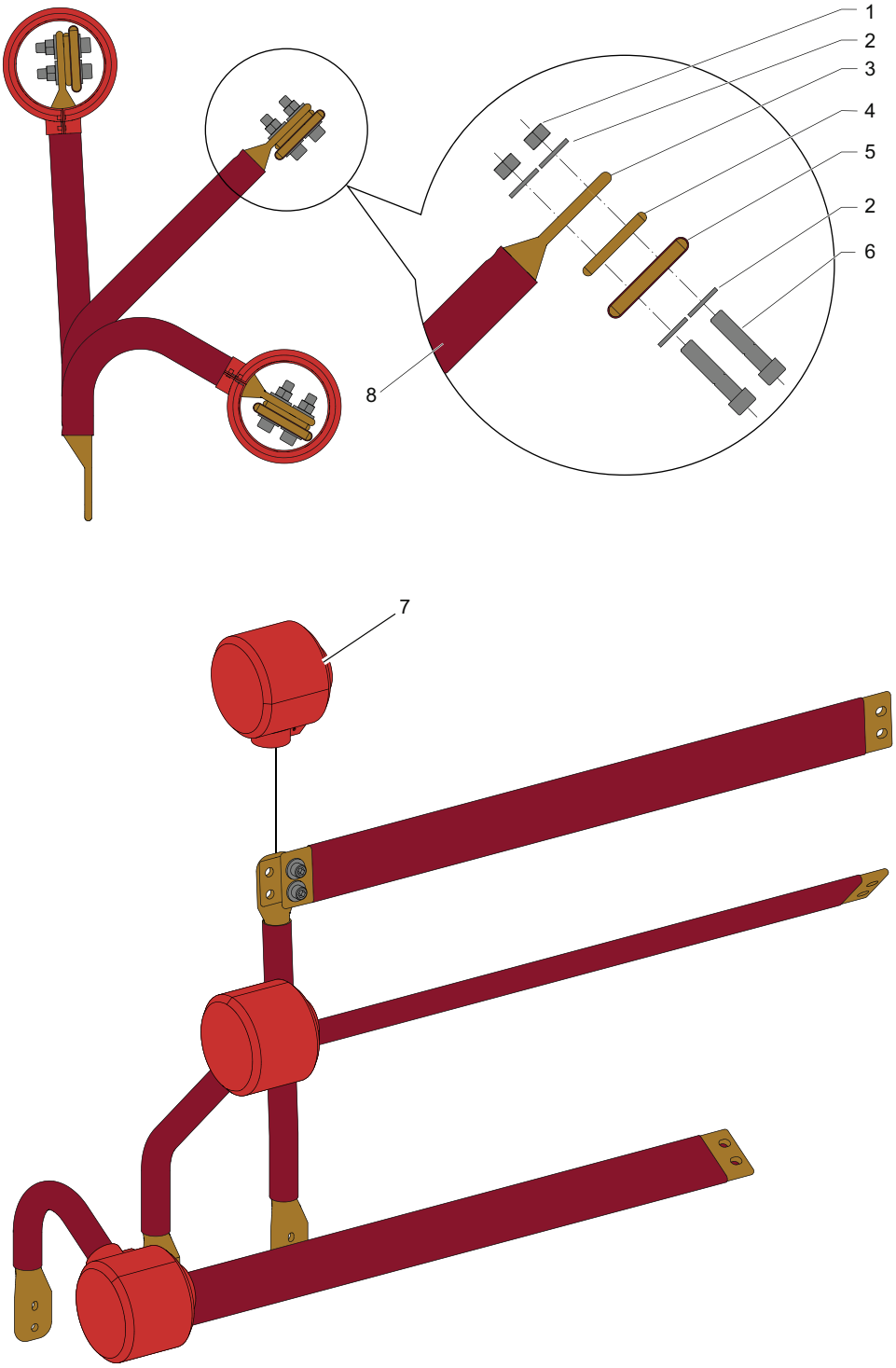

Figure 61
Flat Busbar Arrangement of 1250 A for 1250 A Feeder with Tubular Droppers

1	Nut M12	5	Flat droppers
2	Washer M12	6	Screw M12 x 55
3	Tubular dropper	7	**Boot**
4	Spacer		

BSC - BSR Cubicle

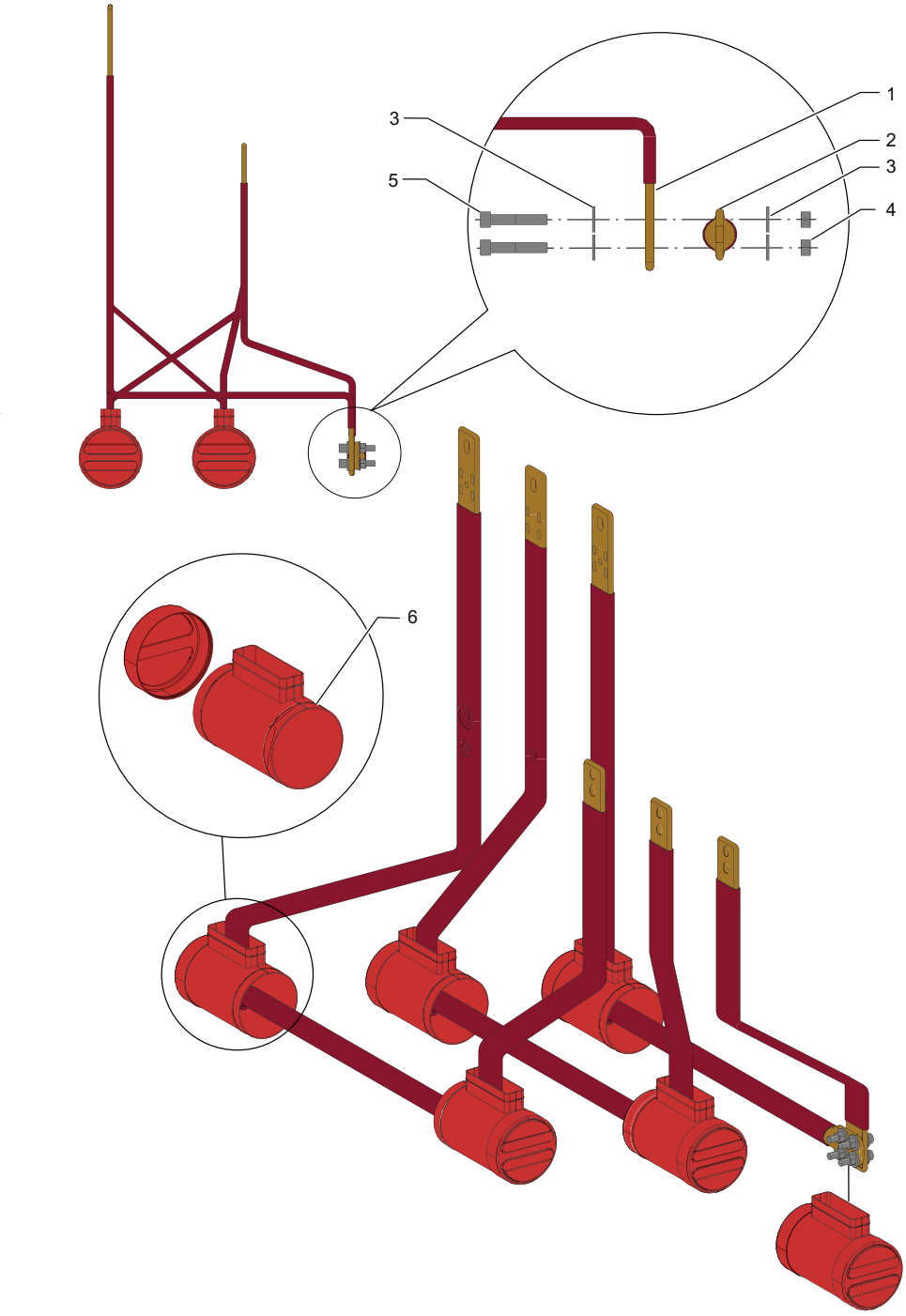

Figure 62
Tubular Busbar Arrangement of 1250 A for 1250 A BSC - BSR with Flat Droppers

1	Flat dropper	4	Nut M12
2	Tubular busbar	5	Screw M12 x 55
3	Washer M12	6	Boot

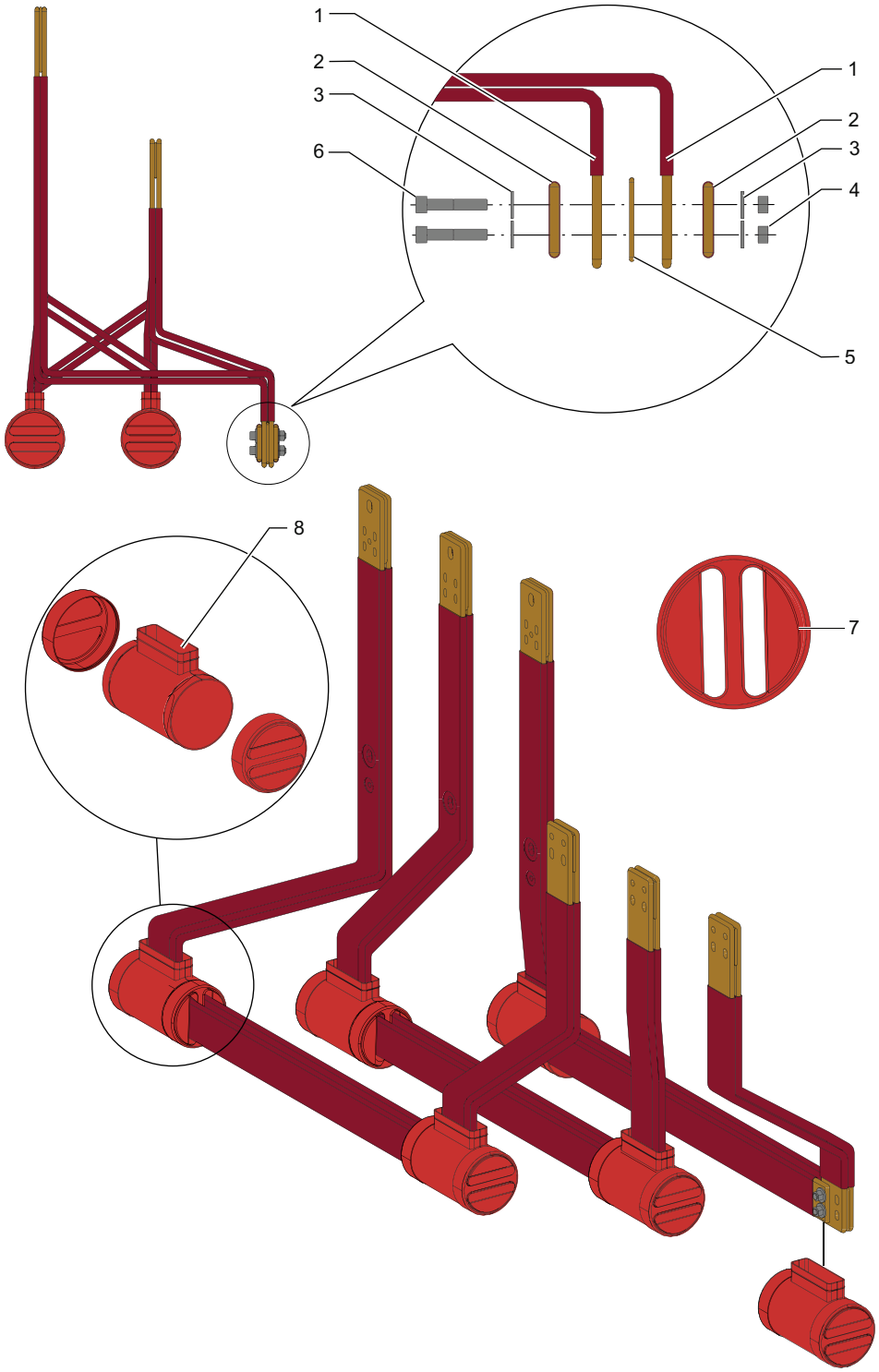

Figure 63
Flat Busbar Arrangement of 2500 A for 2500 A BSC - BSR with Flat Droppers

1	Droppers	5	Spacer
2	Flat busbar	6	Screw M12 x 70
3	Washer M12	7	Boot cover(1)
4	Nut M12	8	Boot

(1) Knock-out the flat busbar entry section from the boot cover on site.

Placing MV Cables on I/F Cubicle

General Information

⚠⚠DANGER

HAZARD OF ELECTRIC SHOCK, EXPLOSION OR ARC FLASH

- Only qualified personnel must perform cable terminations and cable installation.
- Make sure that the cable dielectric insulation does not contact any grounded metal parts or other phases.
- The grounded metallic support must be in contact with the external protective cable sheath.

Failure to follow these instructions will result in death or serious injury.

This section provides information for all types of cables.

Retrieve: The floor plates, cable support and hardware bag from the cubicle packaging.

To access the interior of a cubicle. Refer to *Access to the Main Circuit Compartments, User Guide* (BQT6904800).

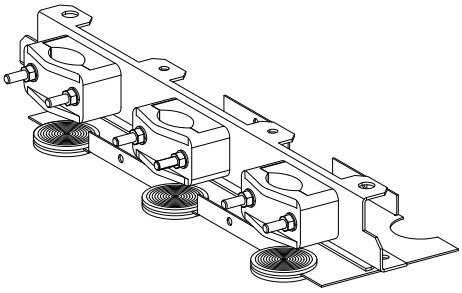

Figure 64
3 Single-Pole Cables

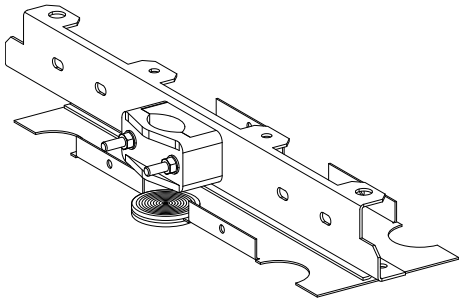

Figure 65
1 Three-Pole Cable

Preparation of Cable Compartment

Access the cable compartment. Refer to *Access to the Cable Compartment, User Guide* (BQT6904800).

1. Release the cable clamp hardware screw (1), washer (2), and nut (5).
2. Remove the top cable clamp (6) and bottom cable clamp (4).
3. Remove the gland plate neck ring (3).
4. Remove base plate (7) as required.

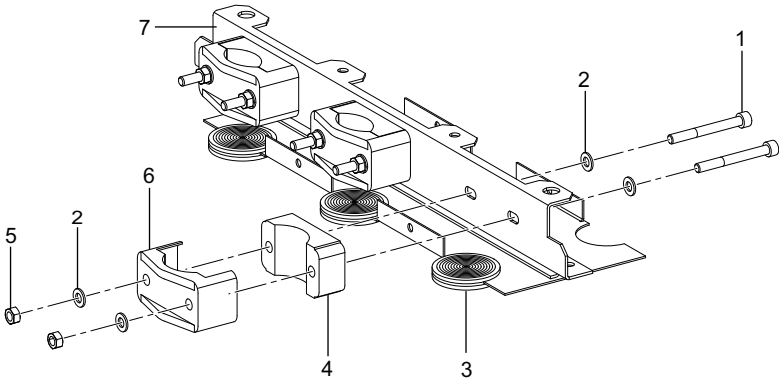

Figure 66
Preparation of Cable Compartment

1	Screw M10 x 90	5	Nut M10
2	Washer M10	6	Top cable clamp
3	Gland plate neck ring Ø72	7	Base plate
4	Bottom cable clamp		

Mount Sealing End and Cable Lug

⚠CAUTION

HAZARD OF INAPPROPRIATE ASSEMBLY

- Do not use aluminium cable lugs for the cable connection. Materials do not match.
- Unless/otherwise specified by the cable manufacturer, comply with the specified tightening torques and pre-coat contact areas. Refer to Standard Tightening Torques, page 13.
- Observe the phase assignment of the switchgear cubicle.
- Strictly follow sealing end and cable lug instructions here below.

Failure to follow these instructions can result in injury or equipment damage.

Follow the below steps to mount sealing end (Figure 67):

1. Route the individual MV cables (3) outwards through the cable compartment of the cubicle to enable assembly of the cable ends.
2. Cut the gland plate neck ring (10) to fit the cable diameter.
3. Push the MV cables (3) through the cut out in the gland plate neck ring (10).
4. Strip cable ends and assemble the sealing end as specified by the cable manufacturer.

Follow the below steps to mount cable lug (Figure 67):

1. Install the MV cables (3) to the cable connection (4) surfaces with screw (1), and nut (5) along with washers (2).

   NOTE: Follow the guidelines from the cable termination manufacturer as the torque requirement are contingent on the type of lug and the diameter of the hole sizes.
2. Re-mount the base plates.
3. Place the bottom cable clamp (9) to the base plate.
4. Insert the screws (11) and washers (6).
5. Place the individual MV cables (3) to the bottom cable clamp (9).

6. Attach the top cable clamp (8) to the bottom cable clamp (9) with the washers (2) and the nuts (7).
7. Connect the ground wires (12) to the cubicle rack.

NOTE: Close all the openings after the installation MV cables helps maintain the IP rating of the cubicle, which helps prevent foreign objects or moisture from entering the cubicle.

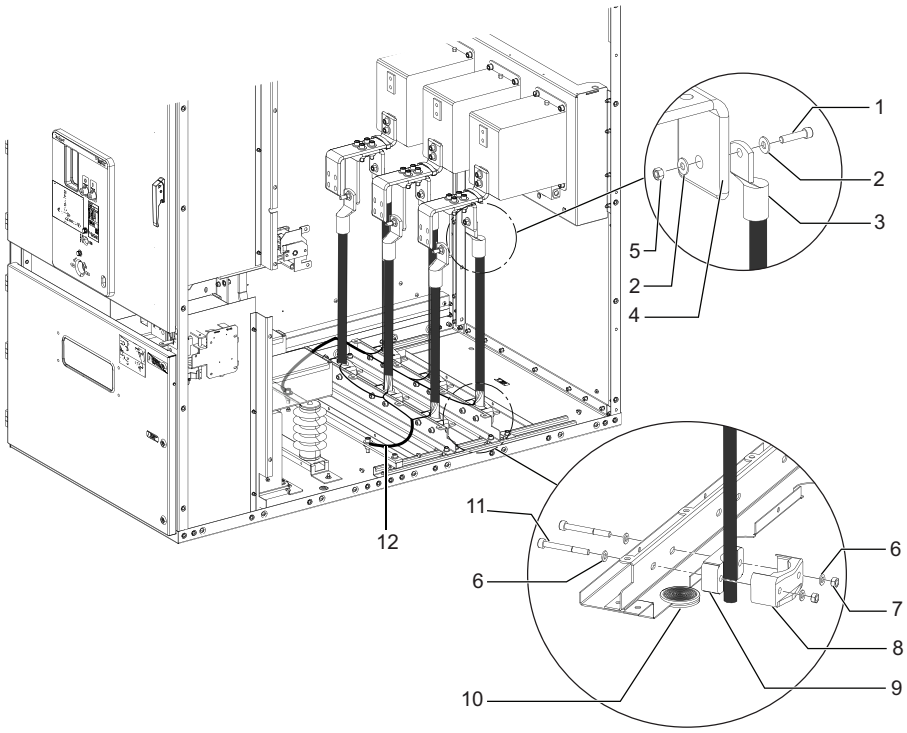

Figure 67
MV Cable Assembly

1	Screw M12 x 50	7	Nut M10
2	Washer M12	8	Top cable clamp
3	MV cable	9	Bottom cable clamp
4	Cable connection	10	Gland plate neck ring Ø72
5	Nut M12	11	Screw M10 x 90
6	Washer M10	12	Ground wire

Placing MV Cables on Feeder with Contactor Cubicle

Preparation of Cable Compartment

Access the Contactor Cubicle Switching Device Compartment, refer to *Access to the Contactor Cubicle Switching Device Compartment, User Guide* (BQT6904800).

Follow the below steps to remove the switching device compartment floor (Figure 68):

1. Remove the switching device compartment floor (3) of the cubicle by unscrewing M8 screws (1) and washers (2).
2. To remove the insulating cover (8), unscrew the M10 screws (4), washers (5), spacers (6), and nuts (7) from the CT connector.

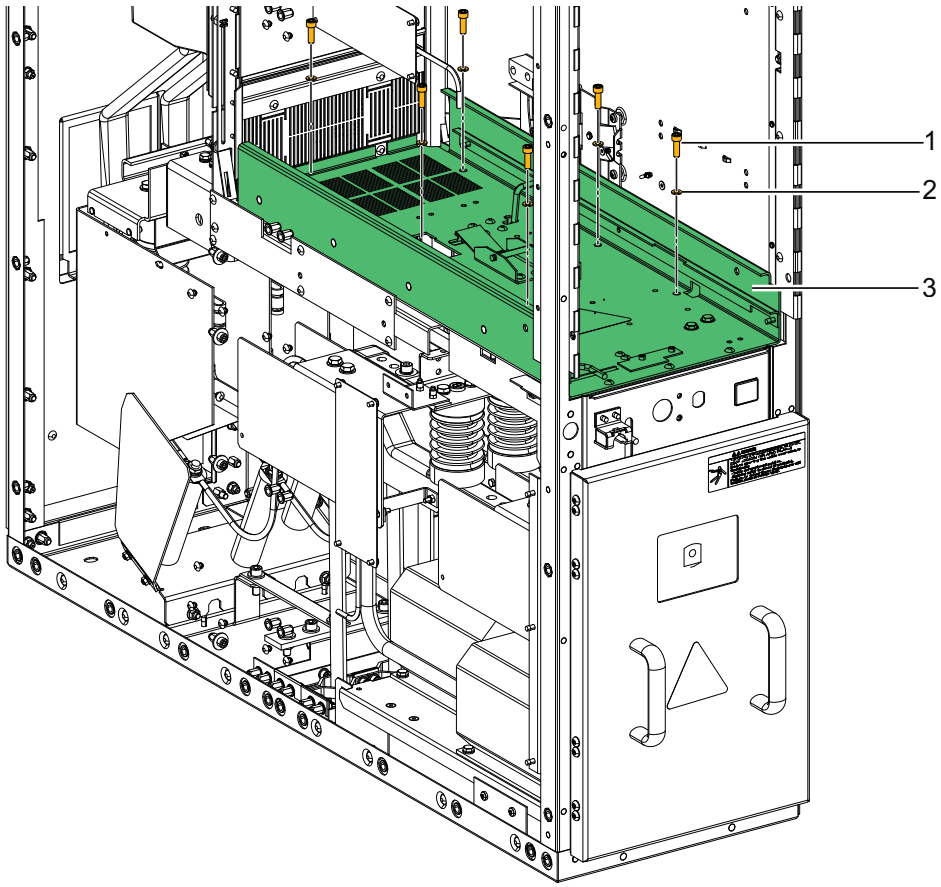

Figure 68
Switching Device Compartment Floor (Sheet 1 of 2)

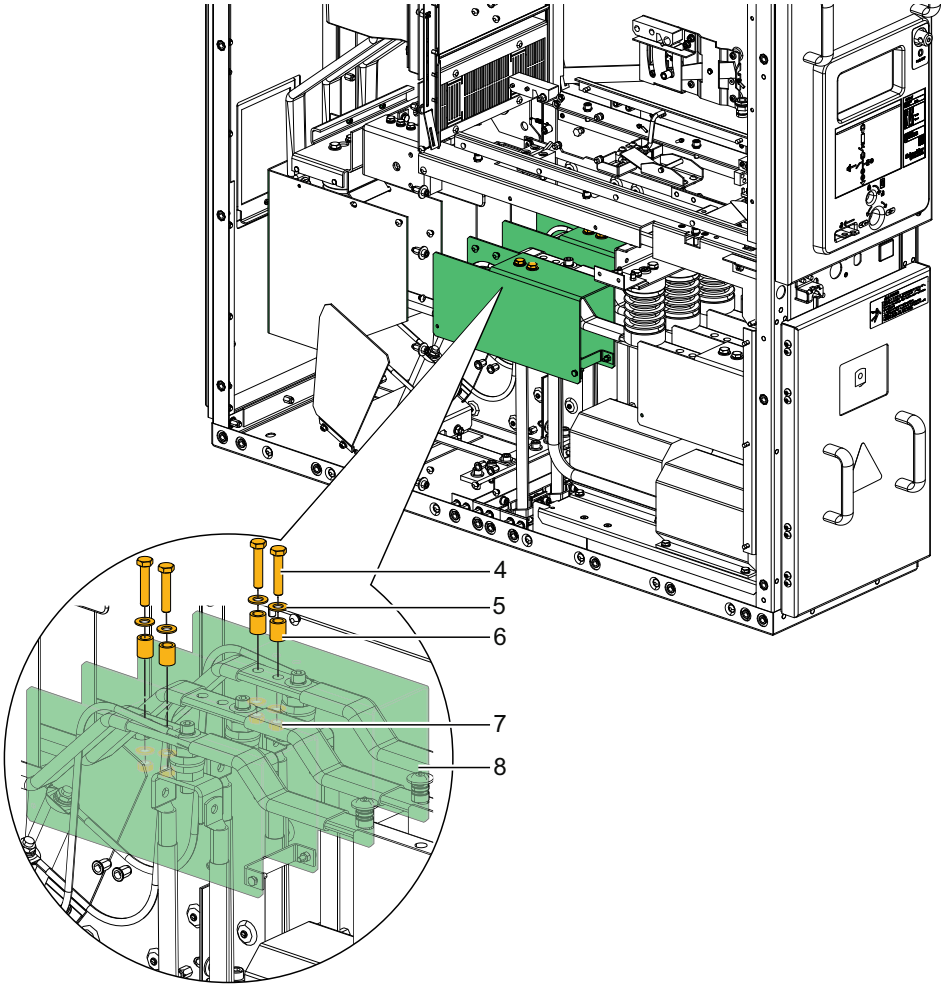

Figure 68
Switching Device Compartment Floor (Sheet 2 of 2)

1	Screw M8	5	Washer M10
2	Washer M8	6	Spacer
3	Switching device compartment floor	7	Nut M10
4	Screw M10	8	Insulating cover

Follow the below steps to disassemble the CT assembly (Figure 69):

1. Remove the CT cable (5) from the CT connection copper bar (1) by unscrewing M8 screws (3), washers (2), and nuts (1).
2. Remove the CT assembly (8) and attached hardware M8 screws (6), washers (7), and nuts (9).
3. Remove the CT assembly (8).

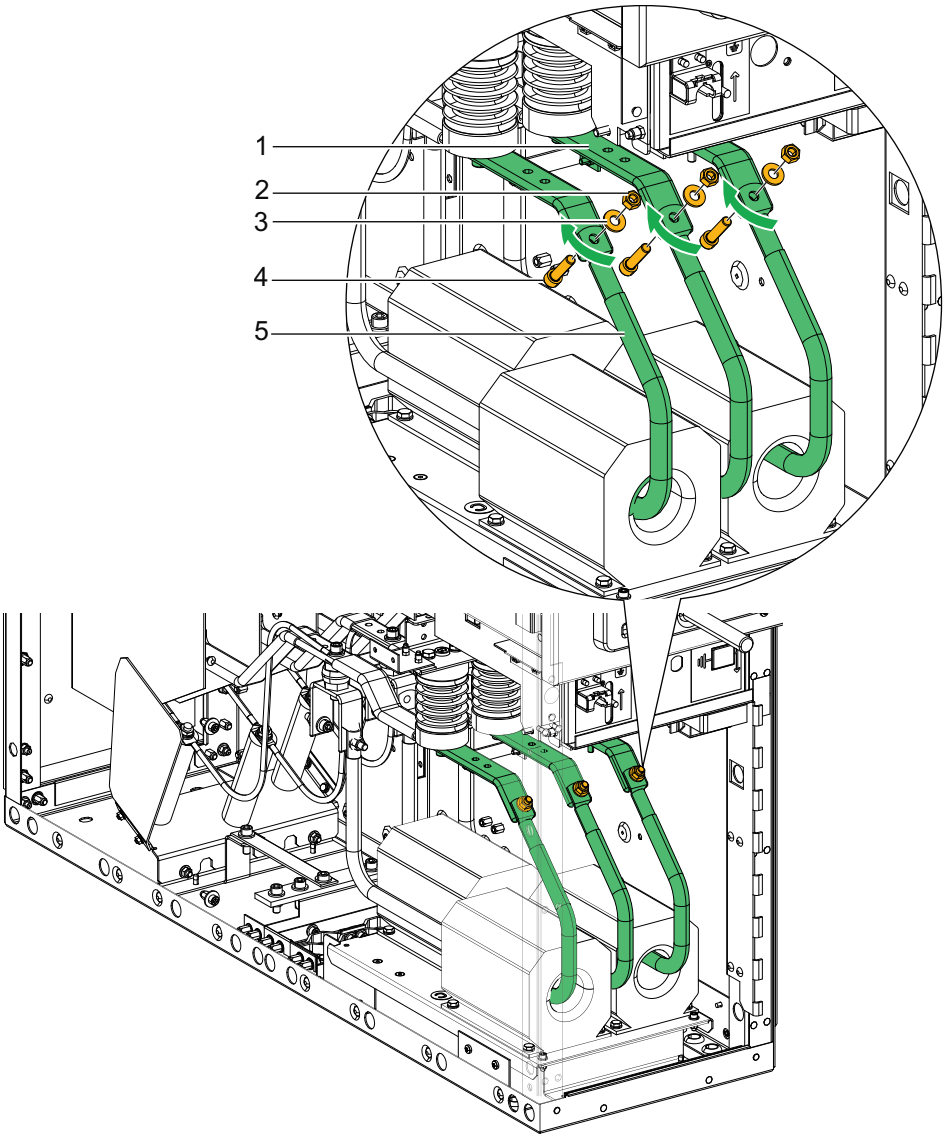

Figure 69
Cable Clamp Disassembly (Sheet 1 of 2)

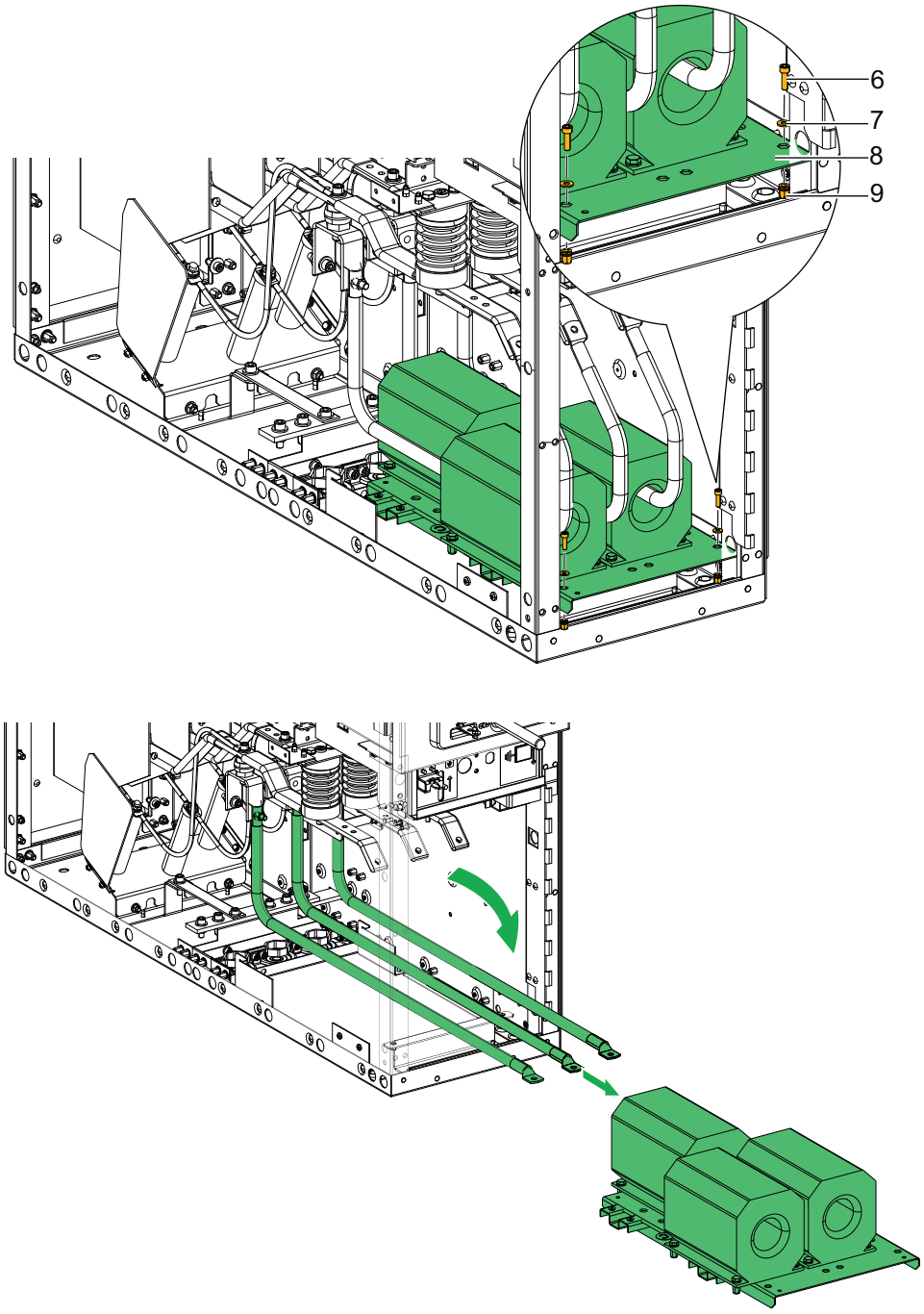

Figure 69
Cable Clamp Disassembly (Sheet 2 of 2)

1	CT connection copper bar	6	Screw M8
2	Nut M8	7	Washer M8
3	Washer M8	8	CT assembly
4	Screw M8	9	Nut M8
5	CT cable		

Follow the below steps to disassemble the cable clamps (Figure 70):

1. Remove the cable clamps (4) and attached hardware M8 screws (3), washers (2), and nuts (1).
2. Remove the cable clamps (4).
3. Remove the gland plate (6) from the earthing system by unscrewing M8 screws (3), washers (2), and nuts (1).
4. Remove the gland plate neck rings (5).

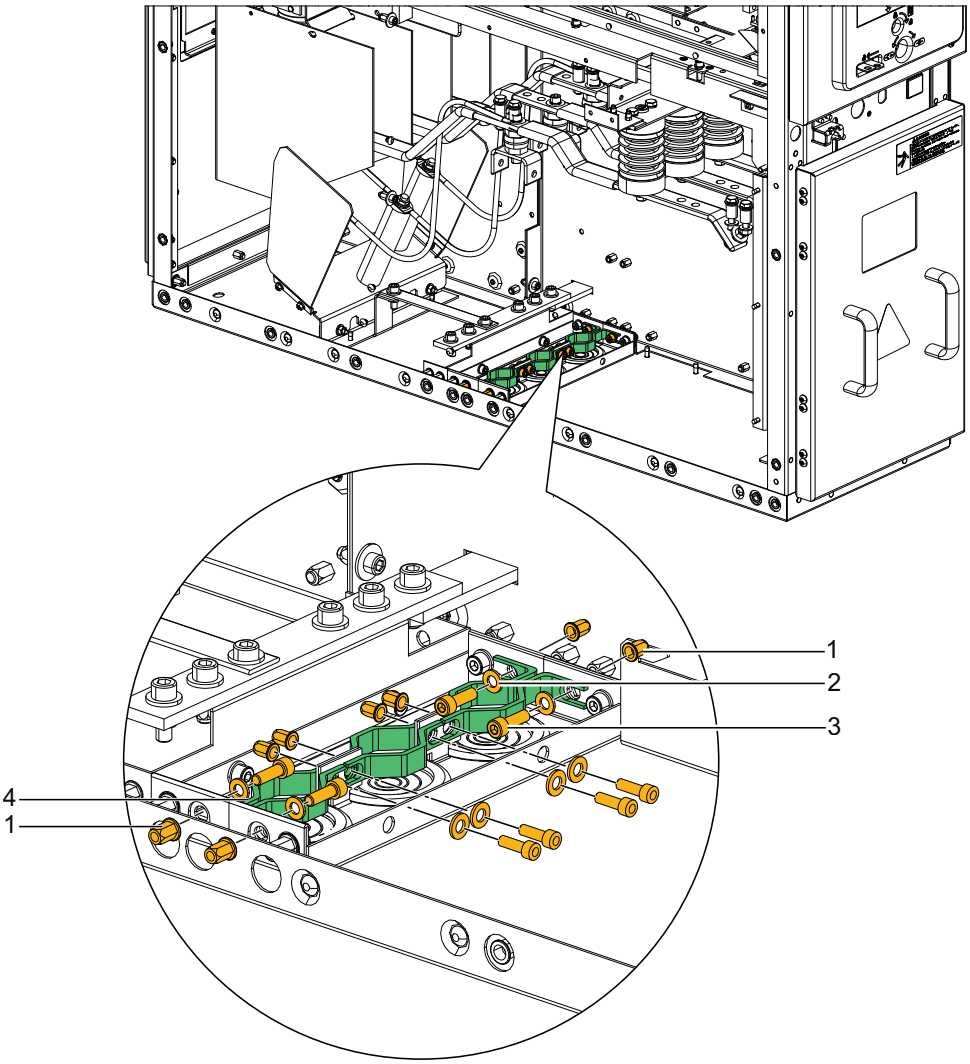

Figure 70
Cable Clamp Disassembly (Sheet 1 of 2)

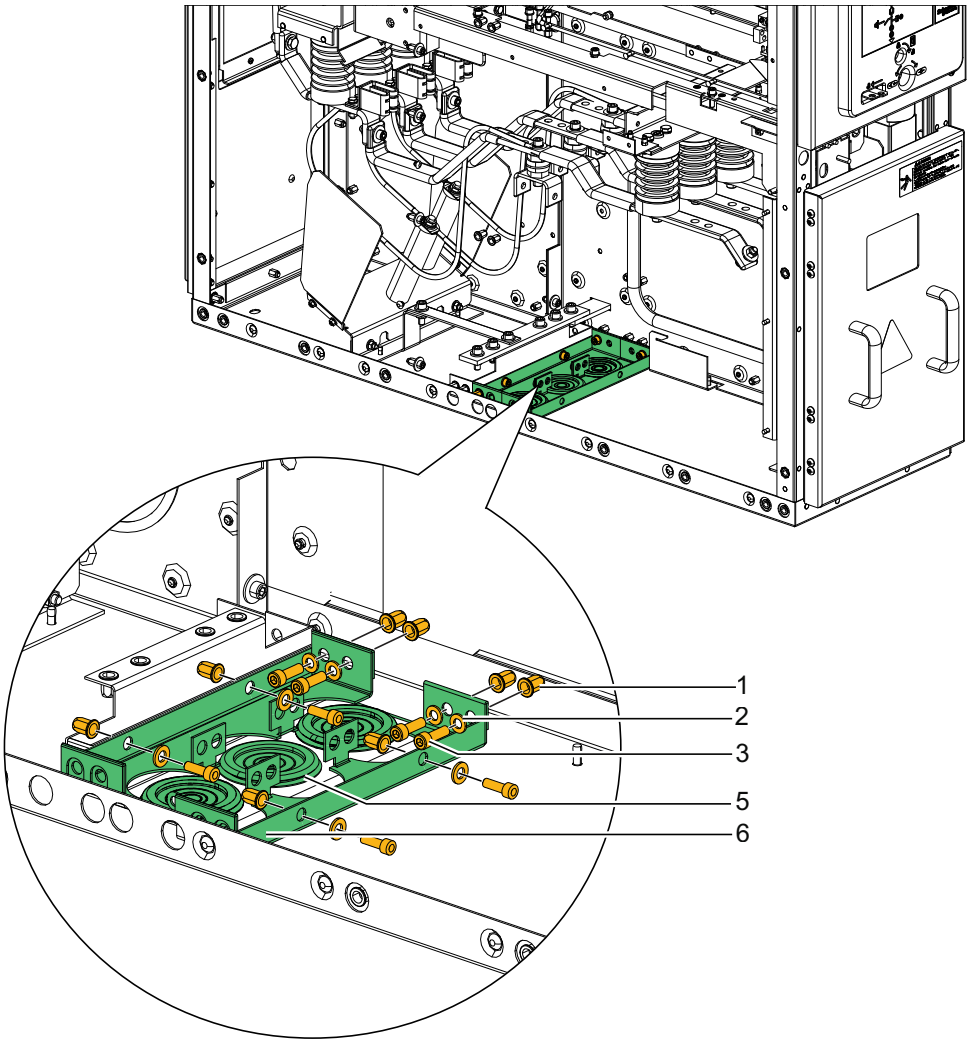

Figure 70
Cable Clamp Disassembly (Sheet 2 of 2)

1	Nut M10	4	Cable clamp
2	Washer M8	5	Gland plate neck ring
3	Screw M8	6	Gland plate

Follow the below steps to assemble the cables (Figure 71):

1. Route the individual cables outwards through the floor openings of the cable compartment base to enable assembly of the cable ends.
2. Cut the gland plate neck ring to fit the cable diameter, and push them onto the cables.
3. Strip cable ends and assemble the sealing end as specified by the cable manufacturer.
4. Install the cables (3) to the cable connection (5) surfaces with screw (4), and nut (1) along with washers (2).

   NOTE: Follow the guidelines from the cable termination manufacturer as the torque requirement are contingent on the type of lug and the diameter of the hole sizes.
5. Re-mount the gland plates.
6. Attach the cable clamps to the gland plate.

   NOTE: Close all the openings after the installation of MV cables which helps to maintain the IP rating of the cubicle, and helps prevent the entry of foreign objects or moisture into the cubicle.

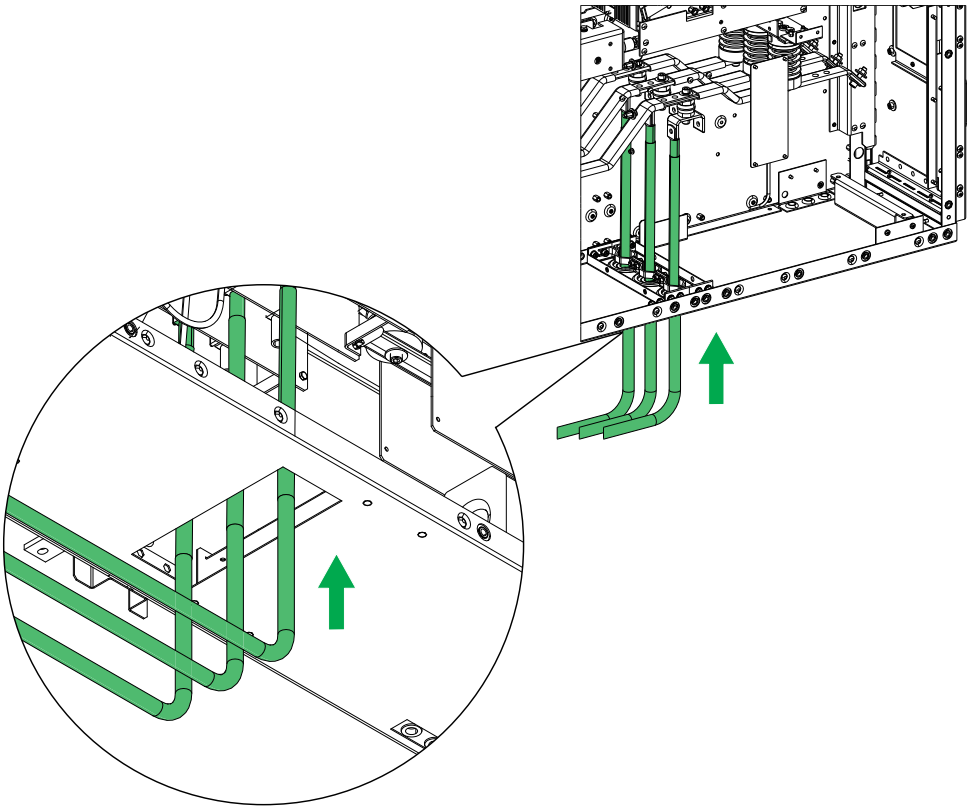

Figure 71
Cable Assembly (Sheet 1 of 2)

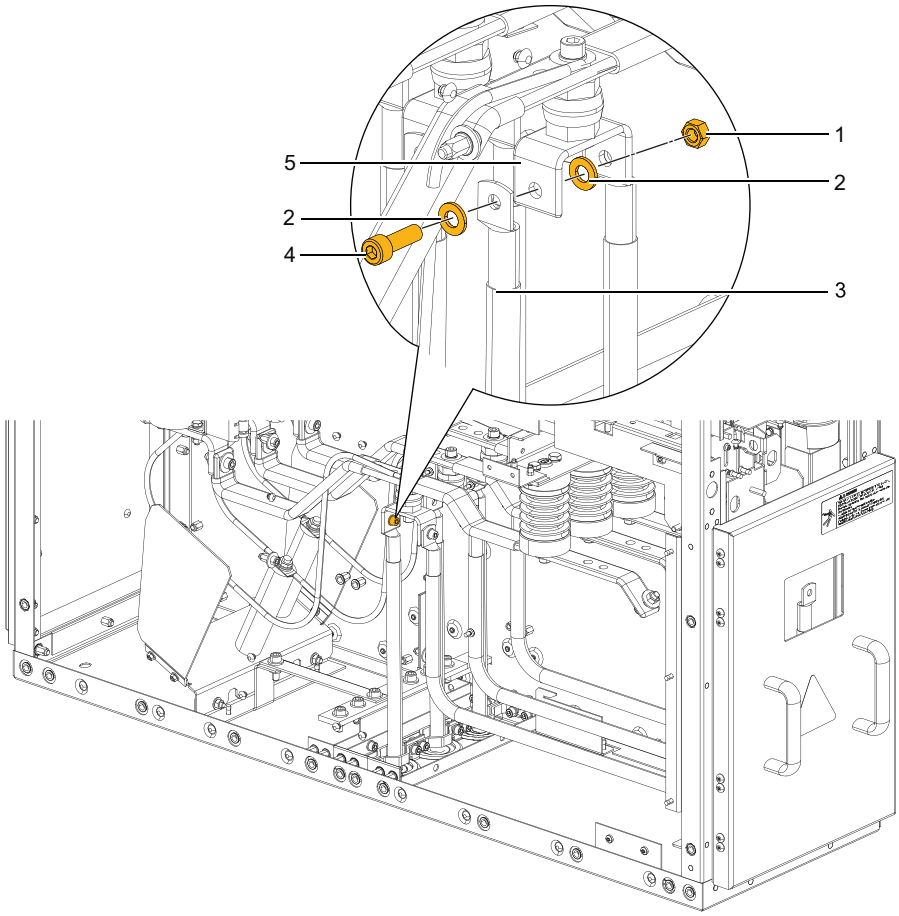

Figure 71
Cable Assembly (Sheet 2 of 2)

1	Nut M12	4	Screw M12 x 50
2	Washer M12	5	Cable connection
3	Cable		

Assembly of the Cable Pan

Step 1: Assembly of Base Plates

Follow the steps to assemble the base plates of cable pan assembly (Figure 1):

1. Attach the side base plates (2) to the center base plate (1), and install the bolts (5) along with washers (4), and hexagonal nuts (3).
2. Insert the gland plate neck rings (6).

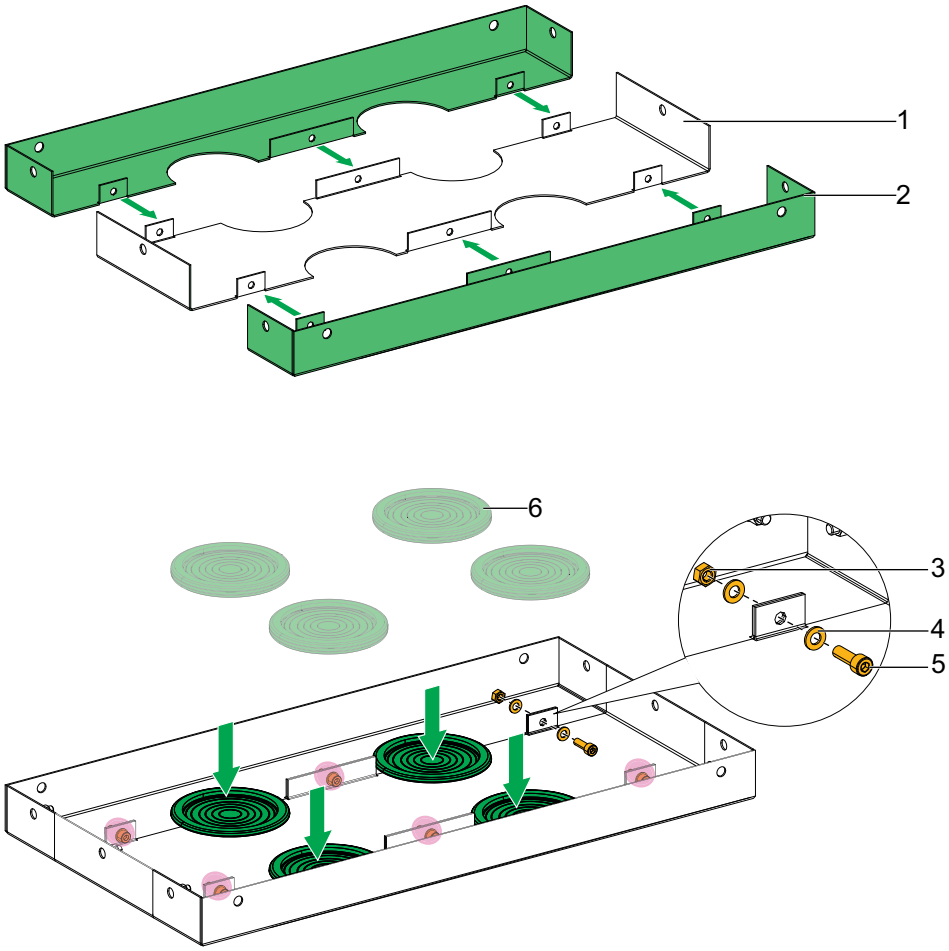

Figure 1
Base Plates Assembly

1	Center base plate	4	Washer M8
2	Side base plate	5	Bolt M8 x 25
3	Hexagonal nut M8		

Step 2: Assembly of Side Covers

Follow the steps to assemble the side covers to the base plate assembly (Figure 2):

1. Attach the side covers (1) to the base plate, and install the bolts (3) along with washers (2).

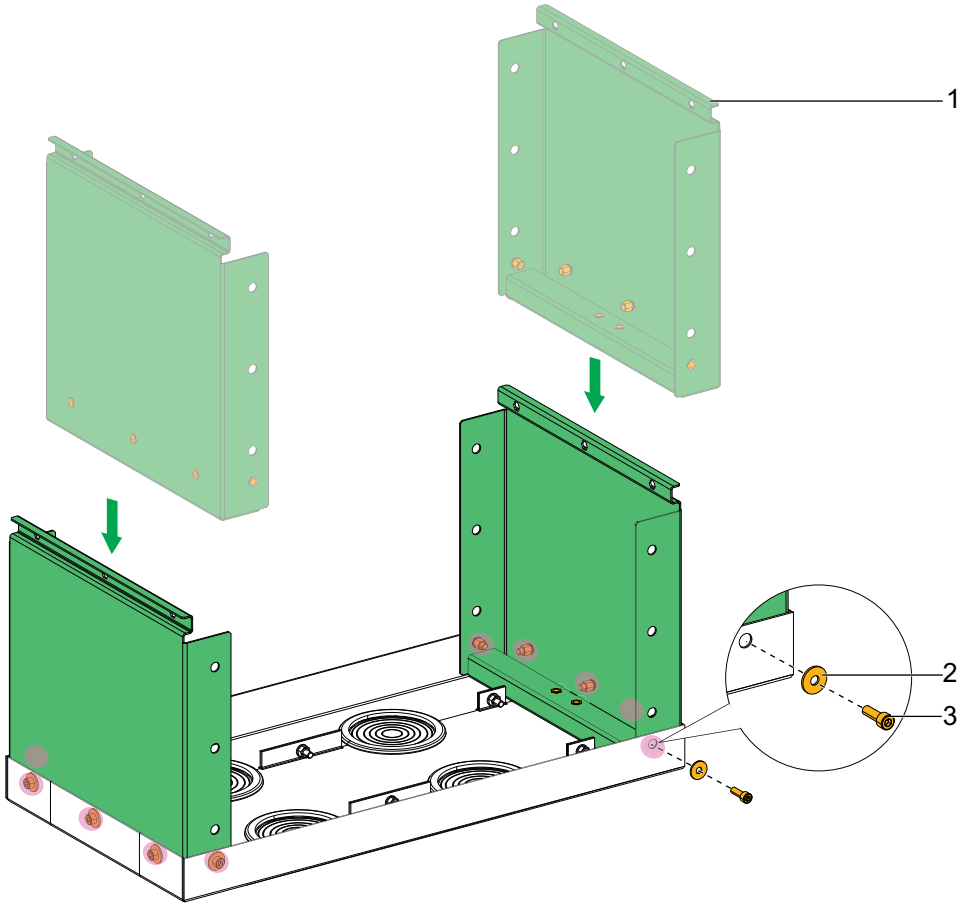

Figure 2
Side Cover Assembly

1	Side cover	3	Bolt M8 x 25
2	Washer M8		

Step 3: Assembly of Cable Clamps

Follow the steps to assemble the cable clamps (Figure 3):

1. Attach the cable clamp plates (3) to the side covers, and install the bolts (1) along with washers (2).
2. Attach the cable clamps (4) to the cable clamp plates (3), and install the bolts (7) along with washers (5), and hexagonal nuts (6).

   NOTE: Adjust the cable clamp (4) as necessary and tighten it according to the cable diameter.

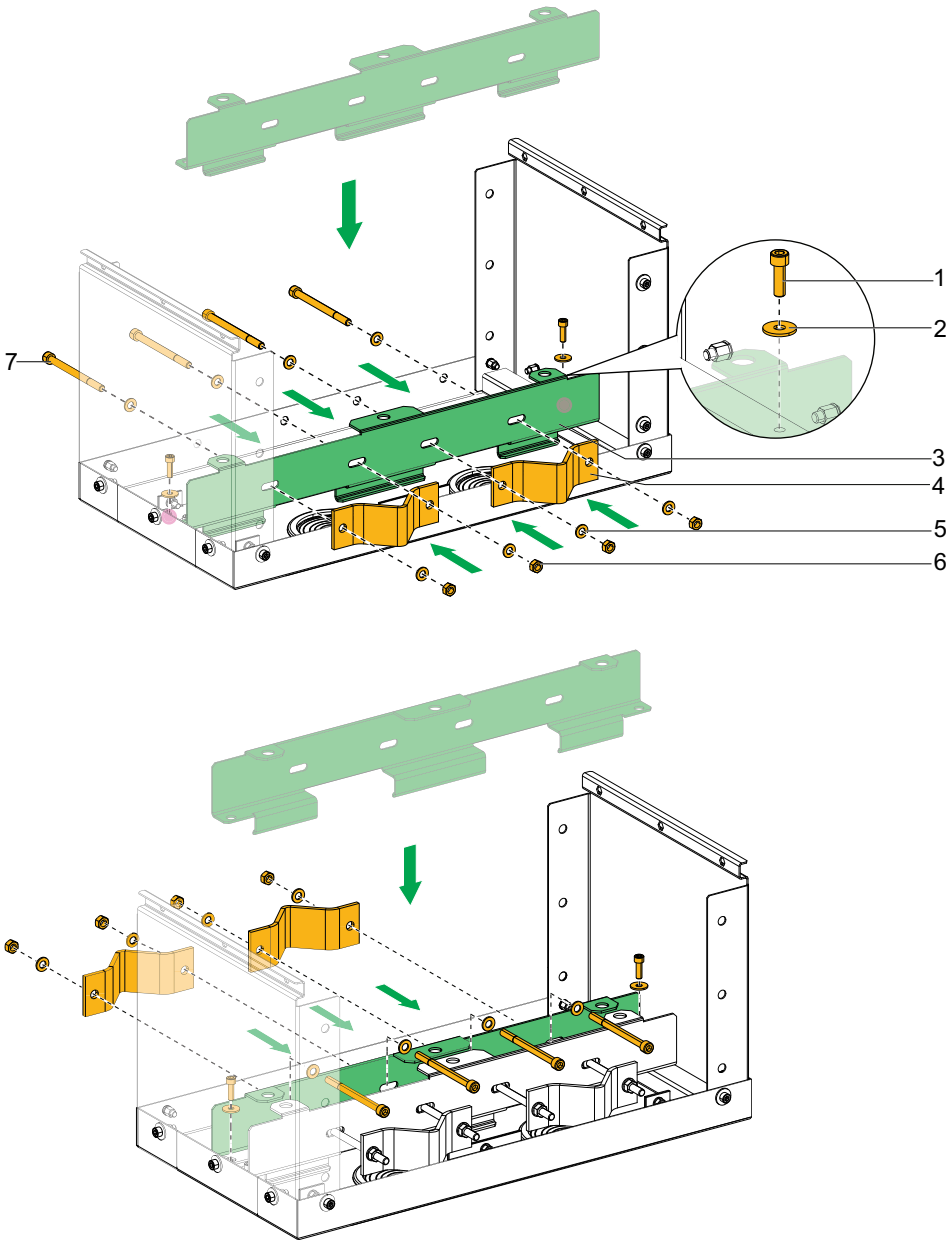

Figure 3
Cable Clamp Assembly

1	Bolt M8 x 25	5	Washer M10
2	Washer M8	6	Hexagonal nut M10
3	Cable clamp plate	7	Bolt M10 x 130
4	Cable clamp		

Step 4: Assembly of Front and Rear Covers

Follow the steps to assemble the front and rear covers (Figure 4).

1. Attach the front and rear covers (1) to the side covers (2), and install the bolts (3) along with washers (2).

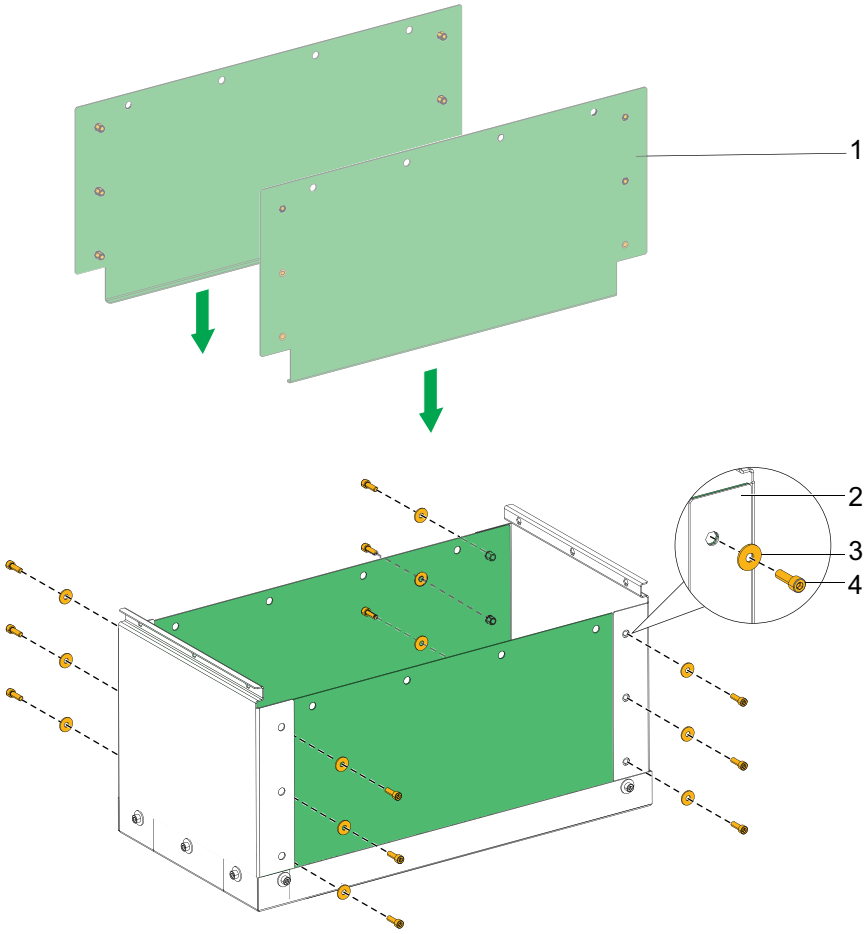

Figure 4
Front and Rear Cover Assembly

1	Front and rear cover	3	Washer M8
2	Side cover	4	Bolt M8 x 25

Step 5: Assembly of Cable Pan Box to Cubicle

Follow the steps to assemble the cable pan box to the cubicle (Figure 5).

1. Place the assembled cable pan box beneath the ground near the rear side of cubicle.
2. Insert the cable pan box into the designated cable entry provision on the bottom plate of the cubicle.

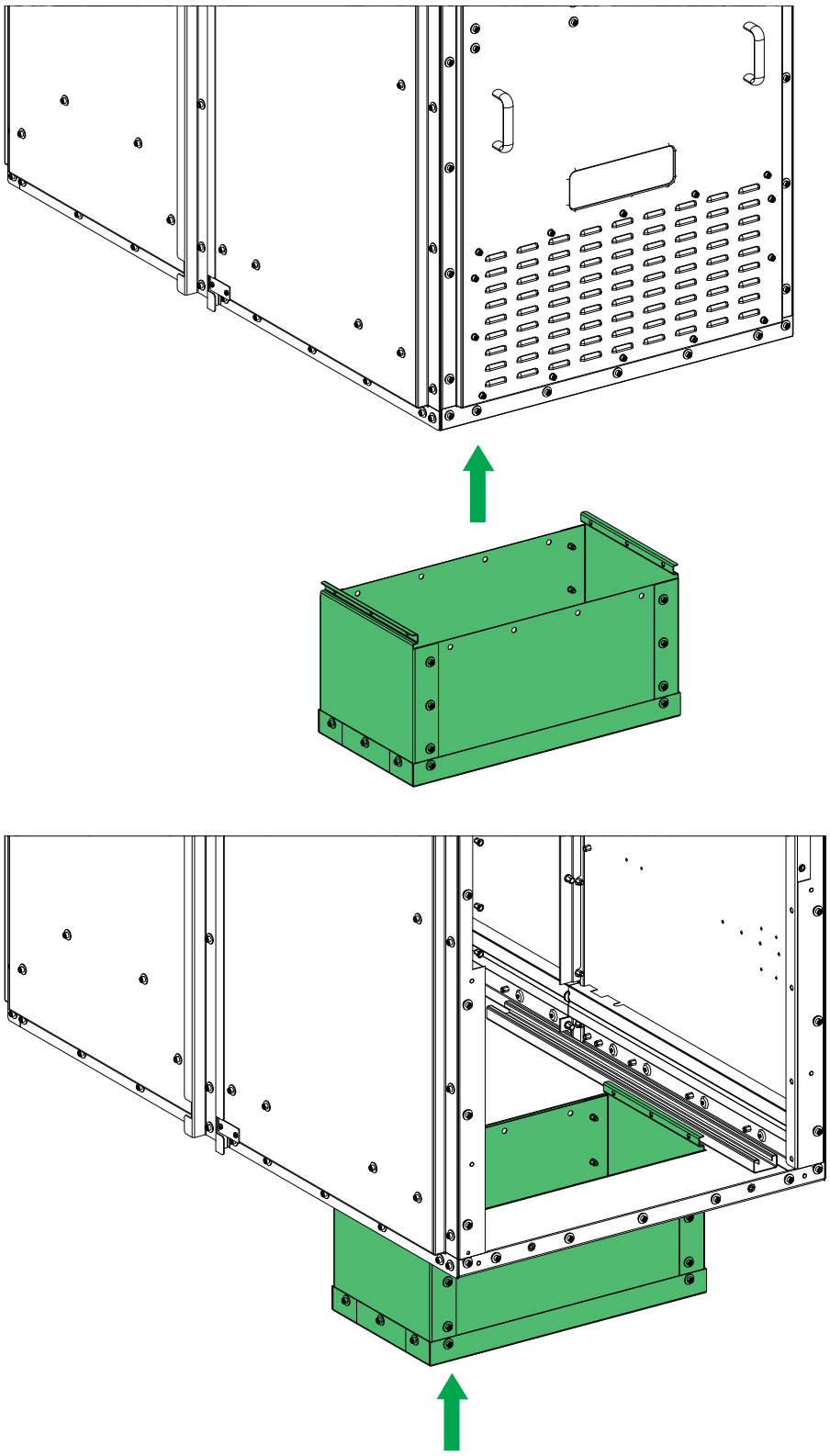

Figure 05
Cable Pan Box Assembly

Step 6: Assembly of L Brackets

Follow the steps to assemble the L brackets to the front and rear covers (Figure 6).

1. Attach the L bracket (1) to the front and rear covers, and install the bolts (2) along with washers (3).

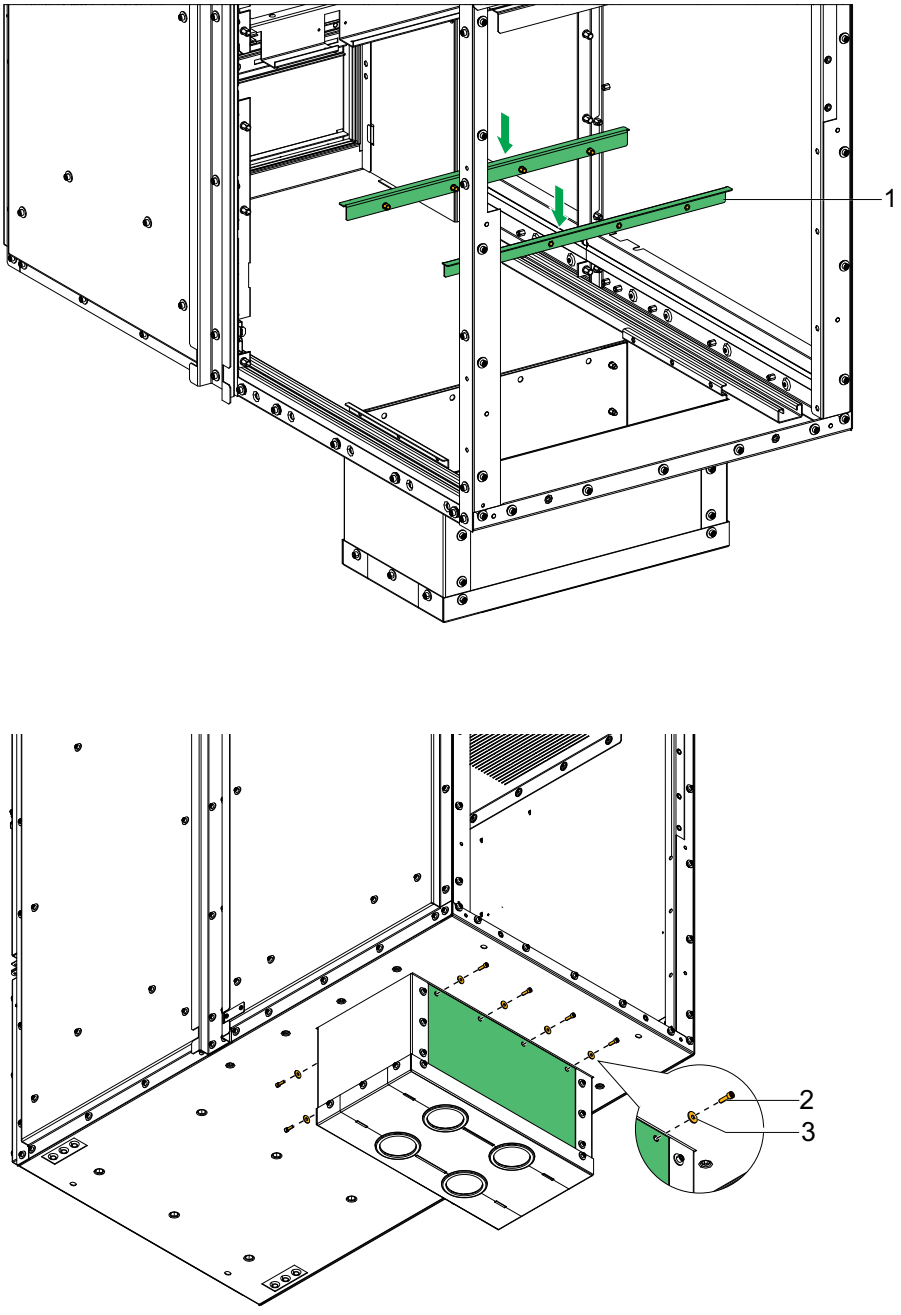

Figure 6
L Bracket Assembly

1	L bracket	3	Washer M8
2	Bolt M8 x 25		

Step 7: Assembly of Supporting Plates

Follow the steps to assemble the supporting plates to the side covers (Figure 7).

1. Insert the U block nuts (2) through the rails (1).
2. Position the supporting plate (6) on to the rails (1), align it with the U block nut (2), and install the bolts (4) along with washers (5).
3. Attach the supporting plate (6) to the side covers (3), and install the bolts (8) along with washers (7).

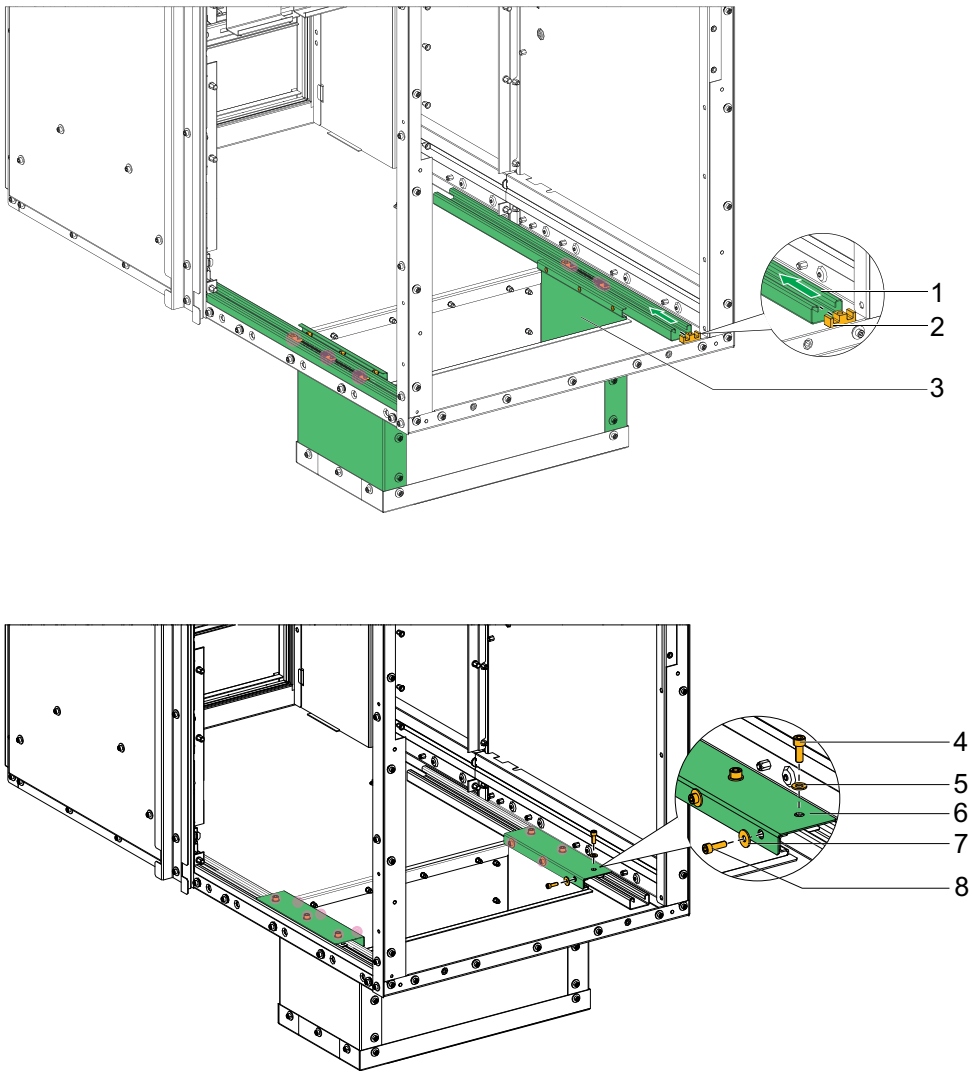

Figure 7
Supporting Plate Assembly

1	Rail	5	Washer M10
2	U block nut	6	Supporting plate
3	Side cover	7	Bolt M8 x 25
4	Bolt M10 x 25	8	Washer M8

Cable Connection System

Cable connection for Ø 18: Cable cross section ≤ 630 mm².

Silver plated connecting bar 50 x 10 with dimensions for the fastening of cable sealing end.

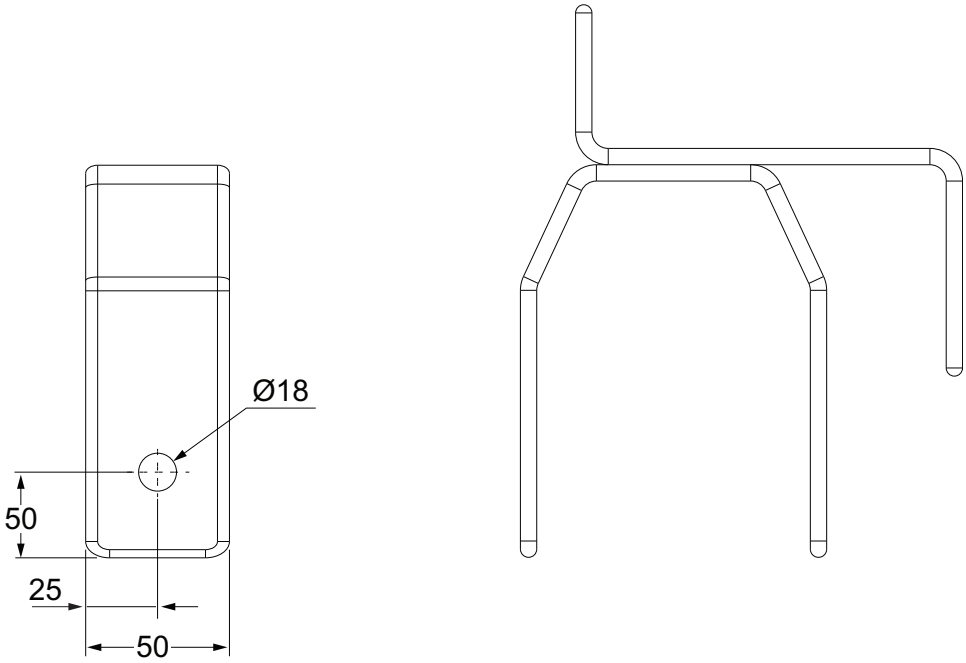

Figure 72
Silver Plated Connecting Bar

Cable Termination Height

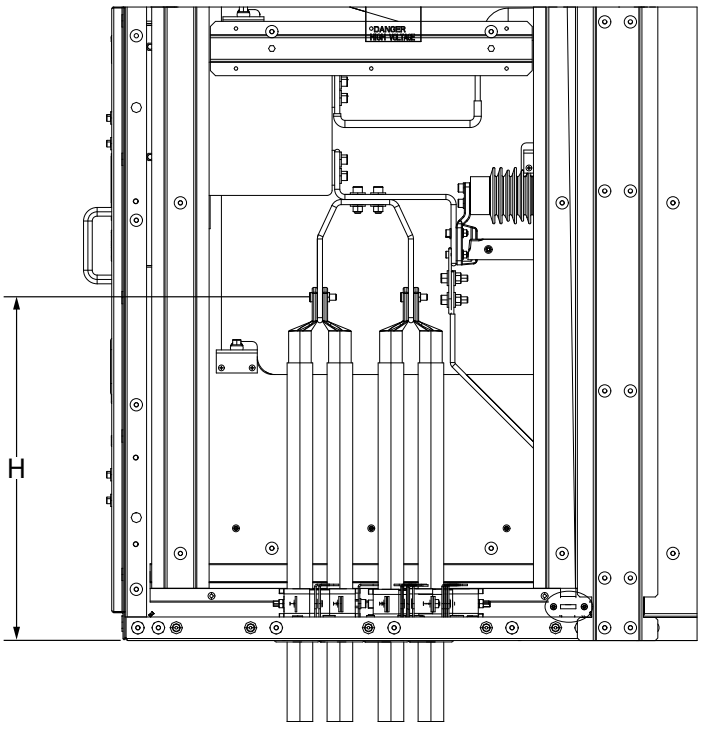

Figure 73
Cable Termination Height

NOTE: If required, cable termination height can be increased by adding a cable box below the bottom sheet. For details, contact Schneider Electric.

Table 16 Cable Termination Height

Rated voltage (kV)	Type of cubicle	Configuration	H (mm)
7.2/12	I/F (400 mm)	315 A	400
12/17.5	I/F (650 mm)	630 A	680
		1250 A	680
	I/F (800 mm)	1250 A	550
		2000 A	550
	I/F (1000 mm)	2500 A	550
		3150 A	450
		4000 A	450
24	I/F (800 mm)	630 A	650
		800 A	650
	I/F (1000 mm)	1250 A	650
		2000 A	650
		2500 A	650

Installation of the Connecting Busbar for 24 kV

Follow the below steps to install the connecting busbar:

1. Attach the connecting busbar (1) to the busbar (7), and install the bolt (6) along with washer (5). Refer to Standard Tightening Torques, page 13.
2. Install the bolts (3) along with washers (2), and hexagonal nuts (10).
3. Install the plastic bolt (9) along with plastic washer (8), and plastic hexagonal long nut (4).
4. Install the box phase barrier (11) on the top of busbar, and install the screws (13) along with washers (12).

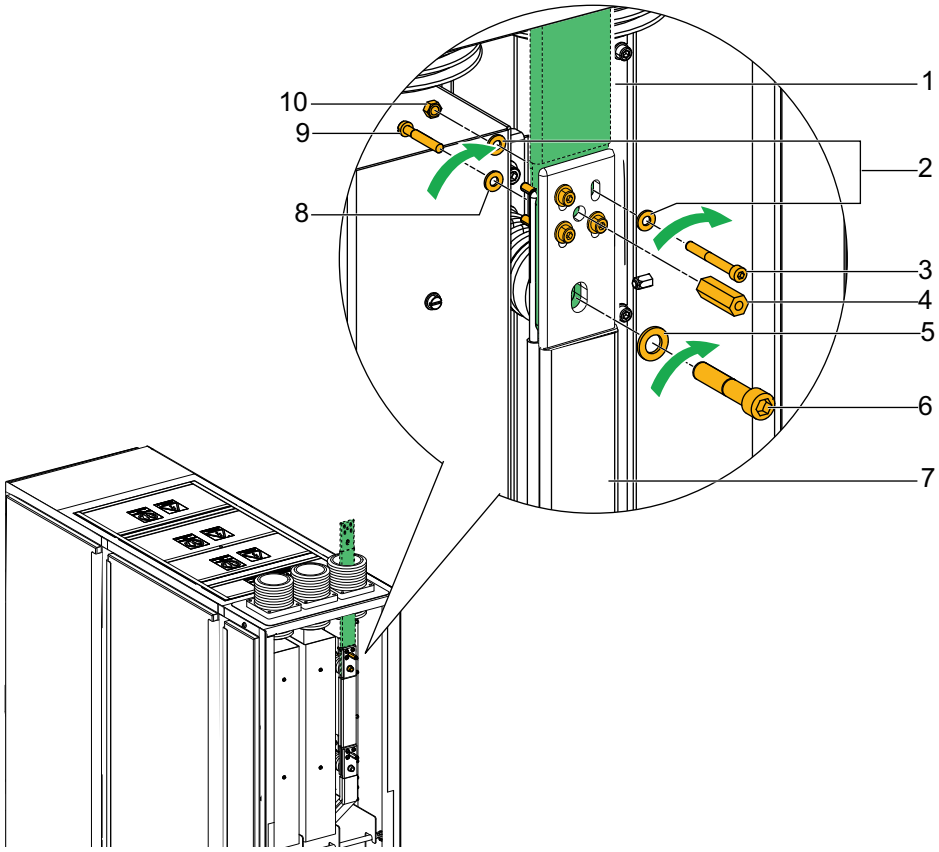

Figure 74
Installation of the Connecting Busbar (Sheet 1 of 2)

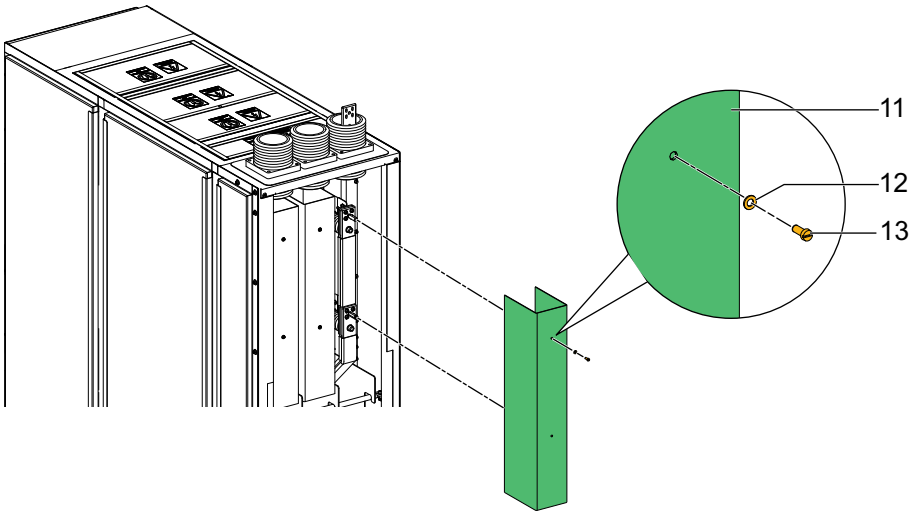

Figure 74
Installation of the Connecting Busbar (Sheet 2 of 2)

1	Connecting busbar(1)	8	Plastic washer M8
2	Washer M8 x 14	9	Plastic bolt M8
3	Bolt M8 x 14	10	Hexagonal nut M8 x 14
4	Plastic hexagonal long nut M8	11	BOX phase barrier
5	Washer M16	12	Washer M8 x 2
6	Bolt M16	13	Screw M8 x 2
7	Busbar		

(1) Connecting busbar is not in the scope of Schneider Electric

LV Connection

Connecting External Cables in the Switchgear Cubicle

⚠⚠DANGER

HAZARD OF ELECTRIC SHOCK, EXPLOSION, OR ARC FLASH

Ensure to fastening the cable and protection equipment must be provided by the customer to maintain IP rating of the cubicle, if the external cables are to be routed into the LV compartment from top of the cubicle.

Failure to follow these instructions will result in death or serious injury.

LV cables customized for control and measurement purposes can be routed from each cubicle's left-hand side to the LV compartment.

Follow the below steps for connecting the external cables in the switchgear cubicle:

1. Remove the metal cable duct covers (1) on the left inside of the cubicle (Figure 75).
2. Route external cables (2) from the cable basement through the gland plate neck ring (3) in the cubicle floor and route them in the cable duct to the LV compartment.
3. Fasten the external cables (2) to the cubicle using cable clamps (4).

   NOTE: Close all the openings after the installation LV cables helps maintain the IP rating of the cubicle, which helps prevent foreign objects or moisture from entering the cubicle.
4. Connect external cables (2) to the terminal strip (5) in the LV compartment, according to the circuit diagram.
5. Install the cable duct covers (1).

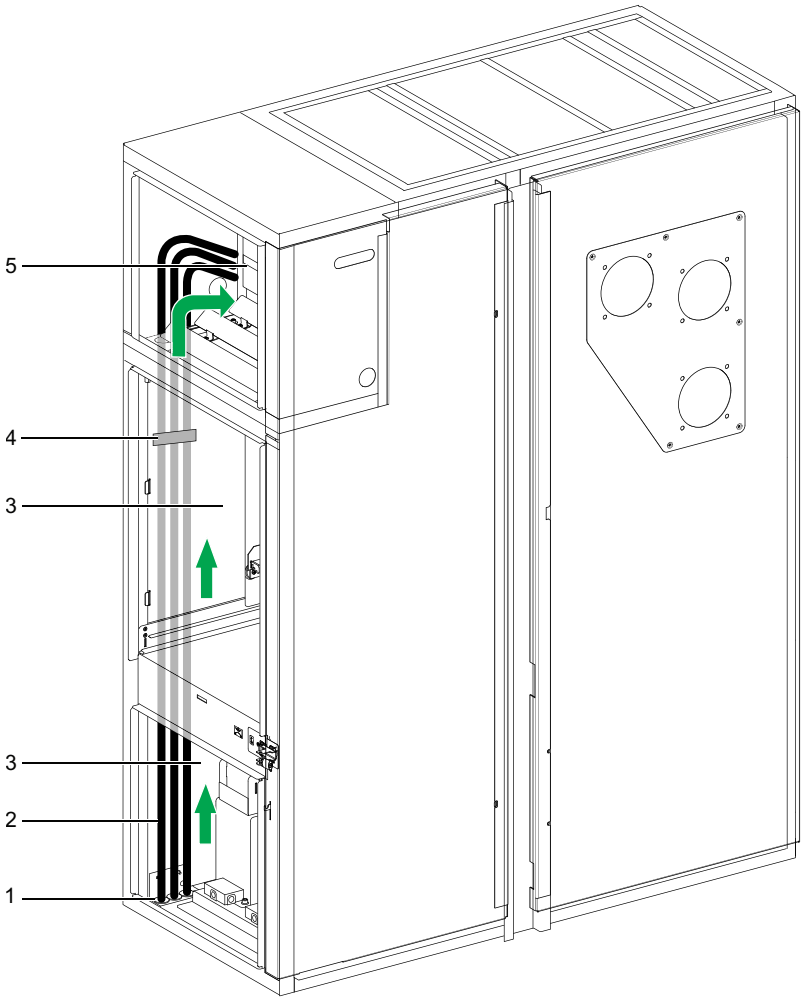

Figure 75
Connecting External Cables in the Switchgear Cubicles

1 Cable duct cover
2 External cables
3 Gland plate neck ring
4 Cable clamp
5 Terminal strip

Installing the Voltage Transformers

Fixed VT

Follow the below steps to assemble the VT:

1. Install the VT mounting plate (2) to the cubicle with hardware (1) (Figure 76).
2. Install the VT (3) to the VT mounting plate (2).
3. Insert the washer (5) and screws (4) in the mounting holes at each corner of the VT. Apply the torque as per ST0171.
4. Install the fuse connection copper bar (16) to the VT (5) with washer (17) and screw (18).
5. Install the safety locks to the fuse connection copper bar (16) and the fixed VT connection copper bar (8) with screw (15), and nut (13) along with washers (14).
6. Attach the fuse (6) to the safety lock by sliding the safety lock into position.
7. Attach the insulation cover (12).
8. Install the fixed VT connection copper bar (8) to the CT-VT connector (7).
9. Insert screw (9), and nut (11) along with washers (10).

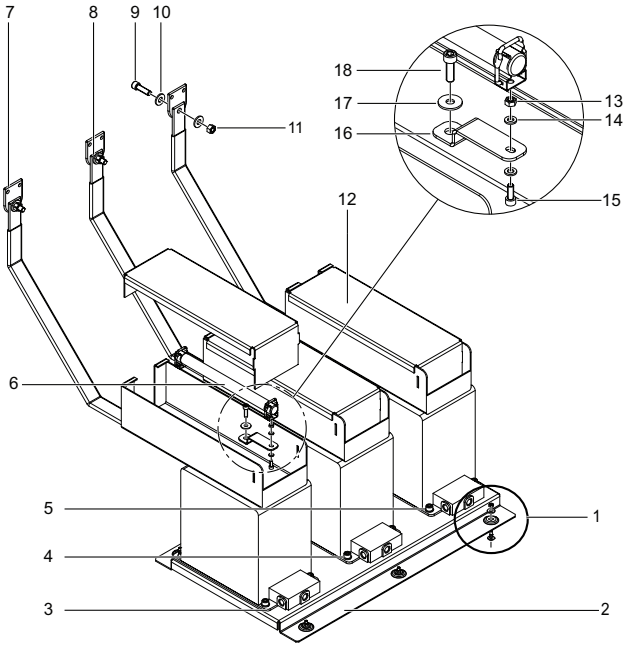

Figure 76
Assembly of VT

1	Mounting plate hardware	10	Washer M12
2	VT mounting plate	11	Nut M12
3	VT DIN 24 kV	12	Insulation cover
4	Screw M10 x 30	13	Nut M6
5	Washer M10	14	Washer M6
6	Fuse	15	Screw
7	CT-VT connector	16	Fuse connection copper bar
8	Fixed VT connection copper bar	17	Washer M8
9	Screw M12 x 40	18	Screw M8 x 45

Withdrawable VT Operation for 24 kV

Extraction of Withdrawable VT–with Transport Locks

⚠⚠DANGER

HAZARD OF ELECTRICAL SHOCK, EXPLOSION, OR ARC FLASH

Before opening the cable door ensure the following:

- Cable compartment not live.
- E/S is closed (if available).

Failure to follow these instructions will result in death or serious injury.

⚠CAUTION

HAZARD OF EQUIPMENT TOPPLING

Ensure the ramp is securely positioned and locked into the panel before extracting the VT.

Failure to follow these instructions can result in injury or equipment damage.

Follow the below steps to remove the withdrawable VT from the cable compartment:

1. Open the door (1) of the cable compartment.
2. Position the ramp (2) correctly, and securely for the removal of the withdrawable VT truck (8).
3. Remove the bolts (4), washers (5), bolts (7), and washers (6) from the two transportation locks (3) using an allen key.
4. Remove the transportation locks (3).
5. Carefully pull out the withdrawable VT truck (8) from the cable compartment.
6. Remove the withdrawable VT truck (8).

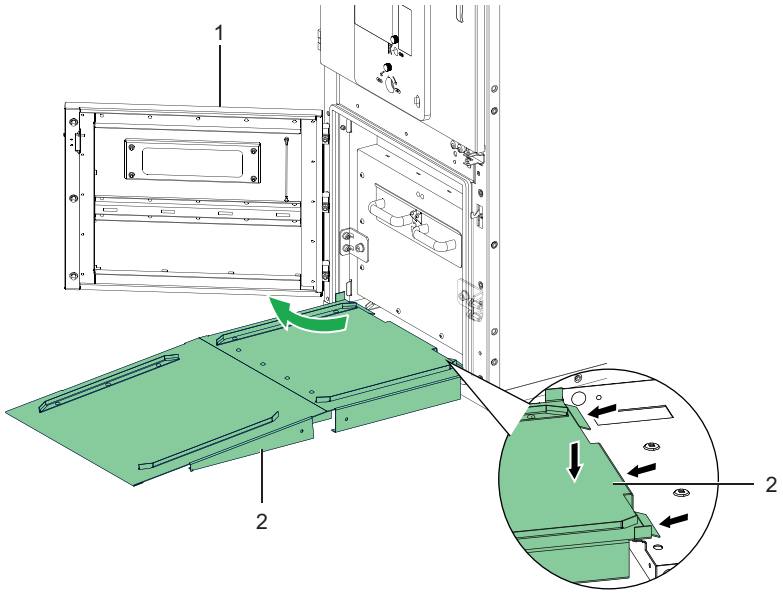

Figure 77
Extraction of withdrawable VT (Sheet 1 of 2)

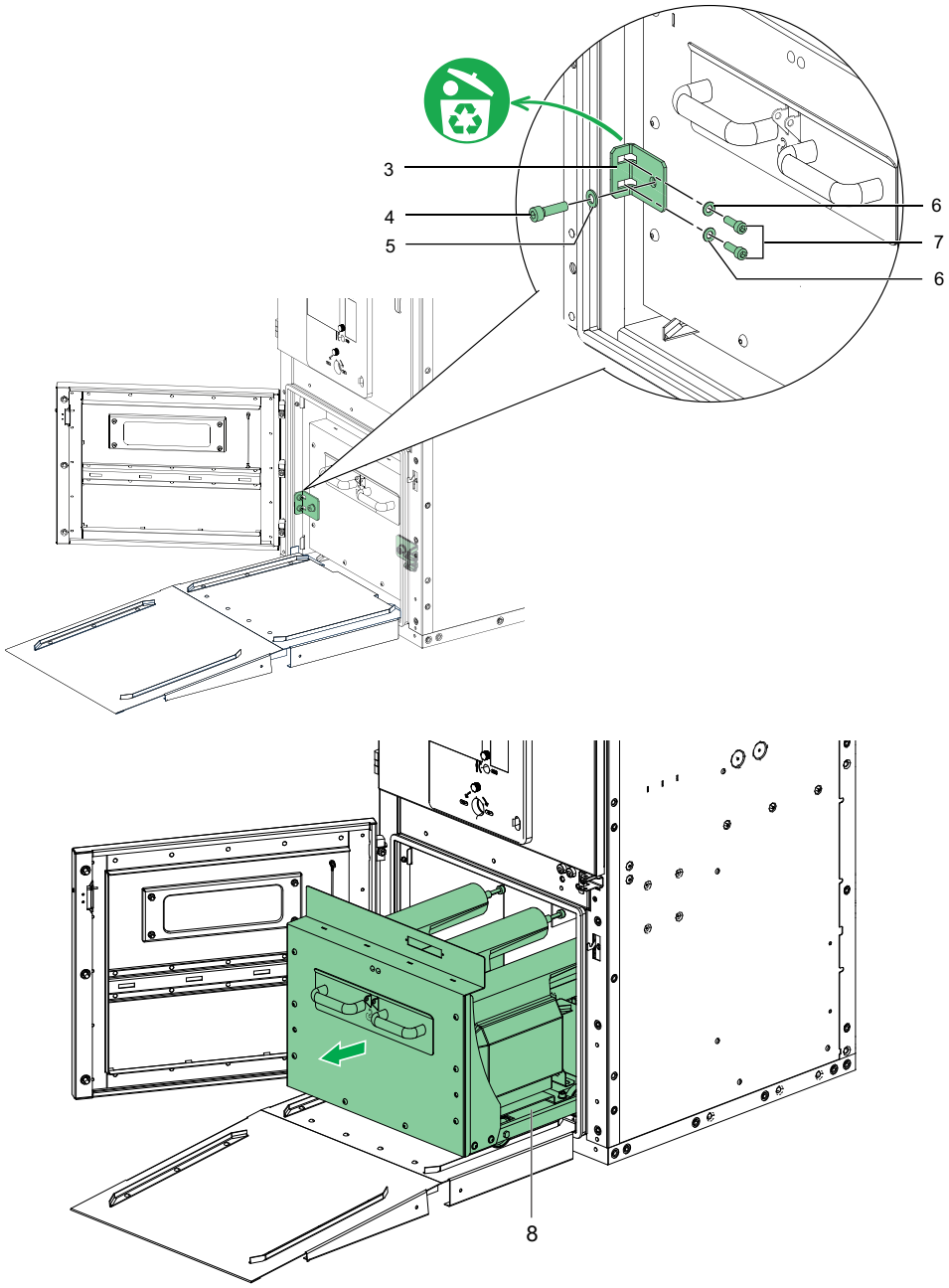

Figure 77
Extraction of withdrawable VT (Sheet 2 of 2)

1	Door	5	Washer M10 x 2
2	Ramp	6	Washer M8 x 4
3	Transportation lock	7	Bolt M8 x 4
4	Bolt M10 x 2	8	Withdrawable VT

Insertion of Withdrawable VT

⚠⚠DANGER

HAZARD OF ELECTRICAL SHOCK, EXPLOSION, OR ARC FLASH

The withdrawable VT truck must be locked into the cable compartment.

Failure to follow these instructions will result in death or serious injury.

⚠CAUTION

HAZARD OF FALLING

Ensure the ramp is securely positioned and locked into the panel before extracting the VT.

Failure to follow these instructions can result in injury or equipment damage.

Follow the below steps to insert the withdrawable VT truck to the cable compartment:

1. Position the ramp (1) correctly and securely to insert the withdrawable VT truck into the cable compartment.
2. Carefully push the withdrawable VT truck (2) into the cable compartment.
3. On the withdrawable VT truck (2), push the hook (3), and the handles (4) down to lock it in the locking slot (5).
4. On the withdrawable VT truck (2), push the hook (3), and the handles (4) down to lock it in the locking slot (5).

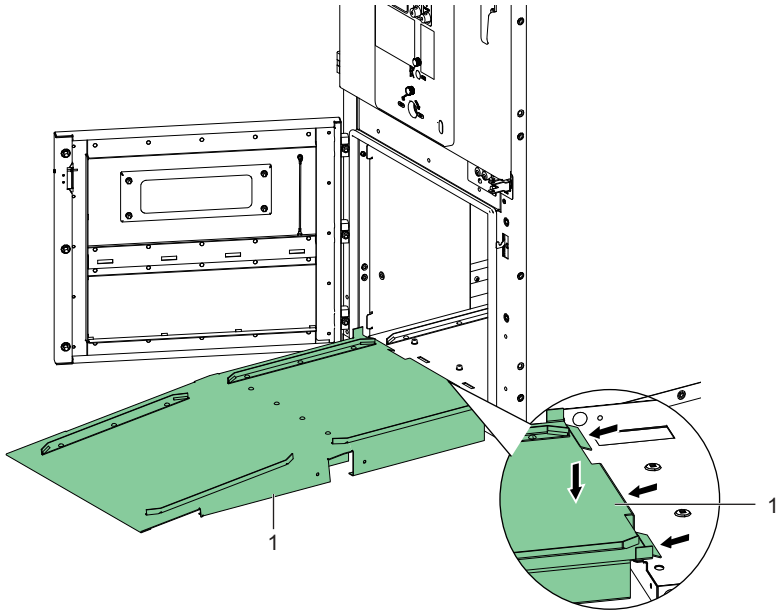

Figure 78
Insertion of withdrawable VT (Sheet 1 of 2)

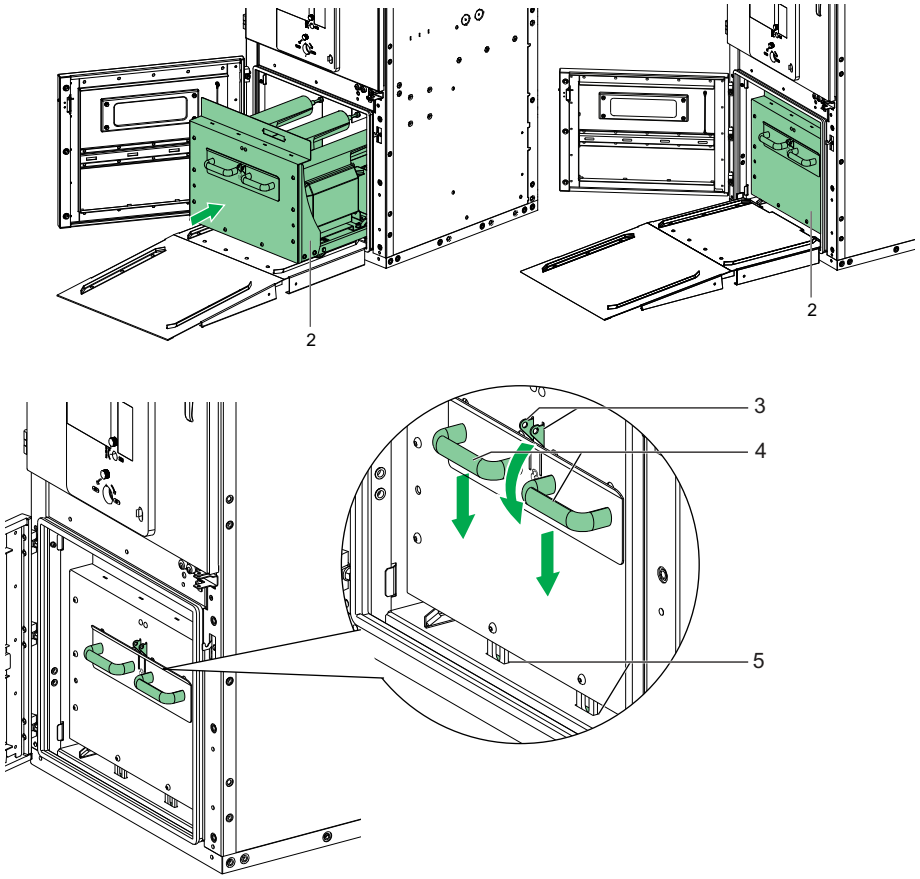

Figure 78
Insertion of withdrawable VT (Sheet 2 of 2)

1	Ramp	4	Handle
2	Withdrawable VT	5	Locking slot
3	Hook		

Extraction of Withdrawable VT–without Transportation Locks

Follow the below steps to extract the withdrawable VT if the transportation locks does not exist:

1. Position the ramp correctly and securely for the removal of the withdrawable VT truck.
2. On the withdrawable VT truck (3), push the hook (1), and lift the handles (2) up to unlock it from the service position.
3. Carefully pull out the withdrawable VT truck (3) from the cable compartment.
4. Remove the withdrawable VT truck (3).

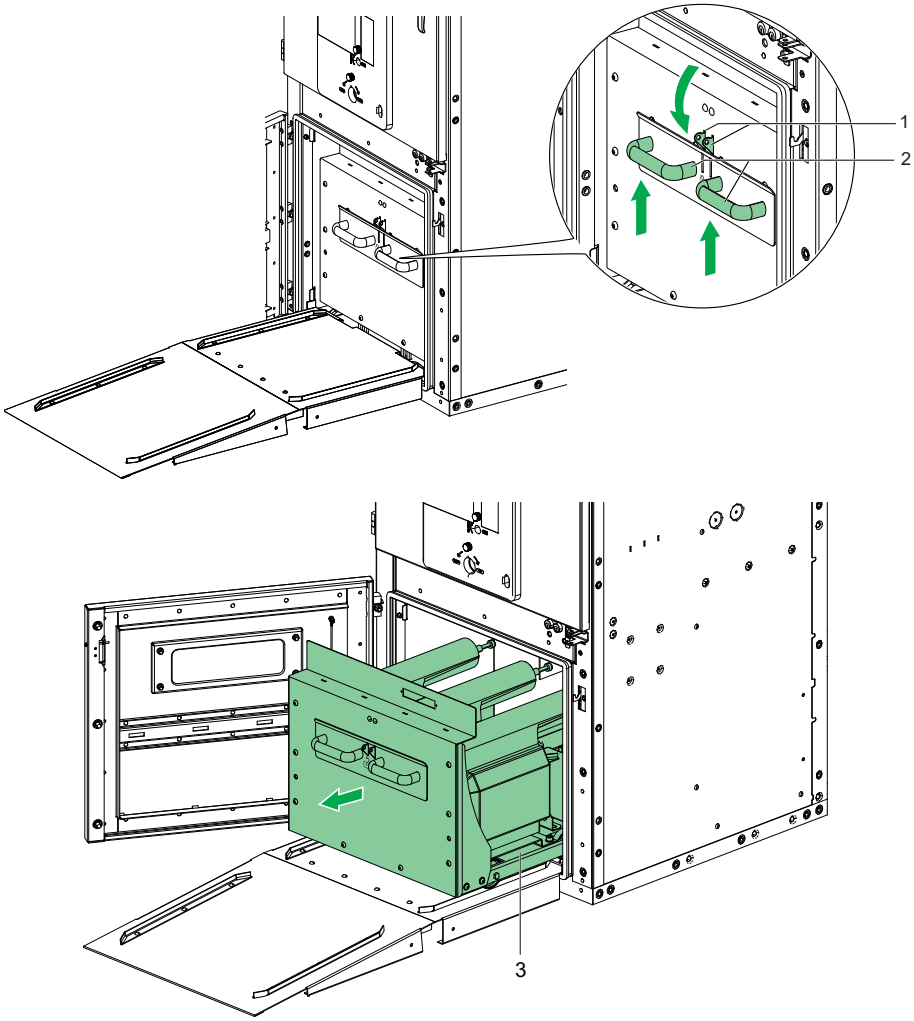

Figure 79
Extraction of withdrawable VT – Without Transportation Lock

1	Hook	3	Withdrawable VT
2	Handle		

Installing the Current Transformers

Follow the below steps to assemble the CT:

1. Place the CT (2) on the mounting plate (1) (Figure 80).
2. Insert the washers (4) and the screws (3) in the mounting holes at each corner of the CT (2).
3. Tighten each screw (3) to a torque of 68 N•m.

Installing P1 Connections:

1. Place the spout to CT connection (7) in position.
2. Insert the washers (6) and the screws (5).
3. Tighten each screw (5) to a torque of 68 N•m.

Installing P2 Connections:

1. Place the E/S to CT connection (8) in position.
2. Insert the washers (6) and the screws (5).
3. Tighten each screw (5) to a torque of 68 N•m.
4. Place the cables connection (9) in correct position to the E/S to CT connection (8).
5. Install the screws (10) along with the washers (11) and the nuts (12).
6. Tighten each nuts (12) to a torque of 68 N•m.
7. Install the sensor TH110 (13) on the E/S to CT connection (8).

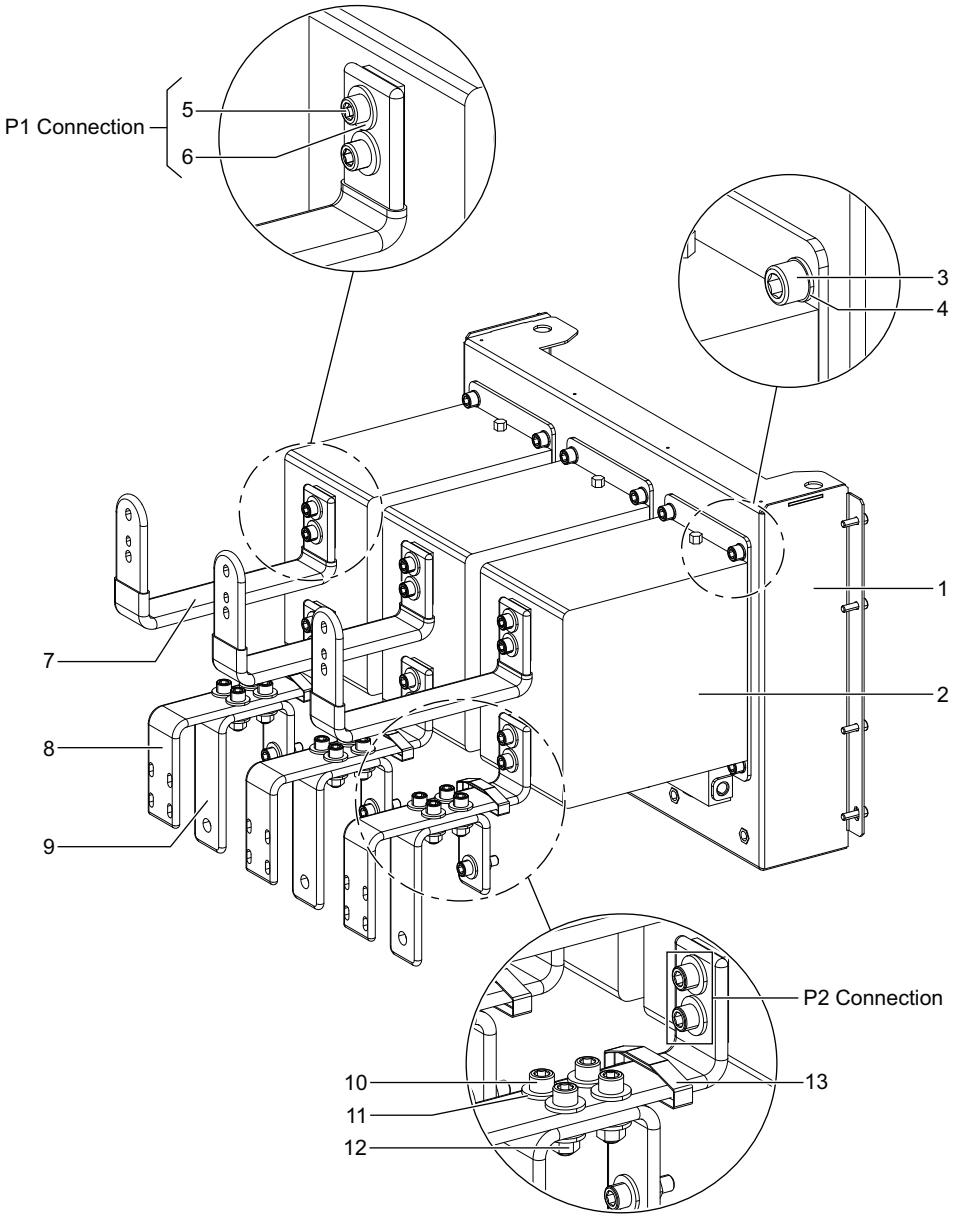

Figure 80
Installing the Current Transformers

1	Mounting plate	8	E/S to CT connection
2	CT	9	Cable connection
3	Screw M12 x 35	10	Screw M12 x 40
4	Washer M12	11	Washer M12
5	Screw M12 x 45	12	Nut M12
6	Washer M12	13	TH110 sensor
7	Spout to CT connection		

Installing the Surge Arresters

⚠CAUTION

HAZARD OF INAPPROPRIATE ASSEMBLY

Ensure to remove the surge arrester assembly in order to access the cable compartment from the front.

Failure to follow these instructions can result in injury or equipment damage.

Follow the below steps to assemble the surge arrester:

1. Install the surge arrester (3) to the support channel (1) with a U nut (2) (Figure 81).
2. Connect the surge arrester terminal (4) to the Fixed VT connection copper bar (5).
3. Insert the plastic bolt (8) along with screw (6) , washer (7) and nut (9).
4. Install the insulation cover (10).
5. For standard torque values, refer to Standard Tightening Torques, page 13 and comply with the specified torque values.

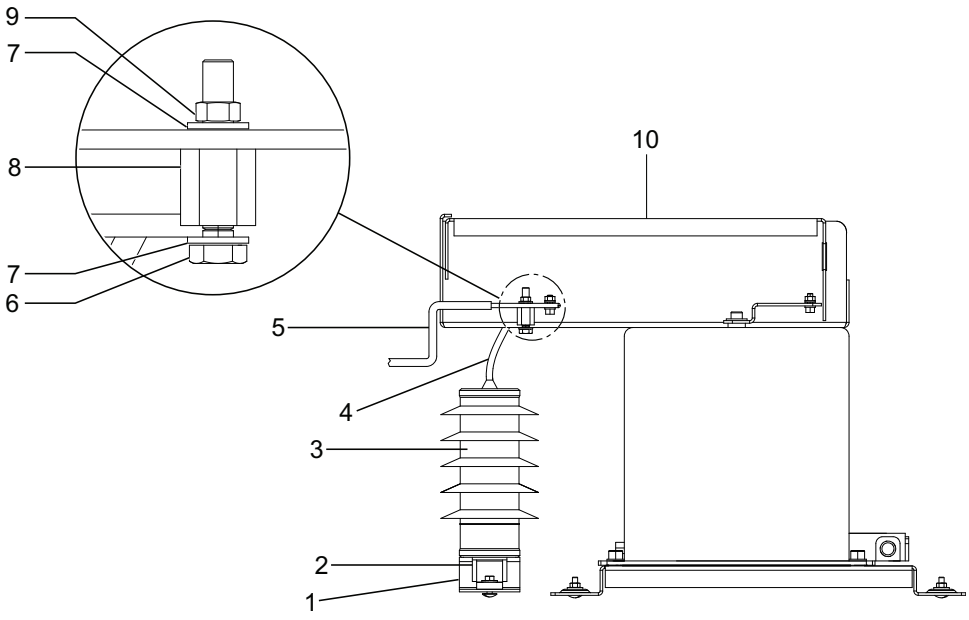

Figure 81
Installing the Surge Arresters

1	Support channel	6	Screw M8 x 20
2	U nut	7	Washer M8
3	Surge arrester	8	Plastic bolt
4	Surge arrester terminal	9	Nut M8
5	Fixed VT connection copper bar	10	Insulation cover

Assembly of the Pressure Relief Duct

⚠⚠DANGER

HAZARD OF ELECTRIC SHOCK, EXPLOSION, OR ARC FLASH

- Ensure that the pressure relief duct assembly is installed in each cubicle as per the design specifications.
- Ensure to apply the recommended tightening torque to the pressure relief duct assembly as per ST0171.
- Ensure that the appropriate safety stickers are affixed to the pressure relief duct assembly.

Failure to follow these instructions will result in death or serious injury.

In case of any internal arc fault, the pressure relief duct on the upper side of the cubicle helps to evacuate the hot gases from the cubicle. In general, when the pressure relief duct is installed the switchgear can be accessed based on internal arc classification from the front, rear and both sides.

NOTE:

- Before mounting the pressure relief duct, comply with the appropriate specifications in the customer-specific switchgear documentation.
- Prior to installing the pressure relief duct, observe the relevant information in the customer-specific switchgear documentation.

Internal Exhaust Tunnel

Assembly of Internal Exhaust Tunnel – 12/17.5 kV

Follow the steps 1–10 to assemble the internal exhaust tunnel.

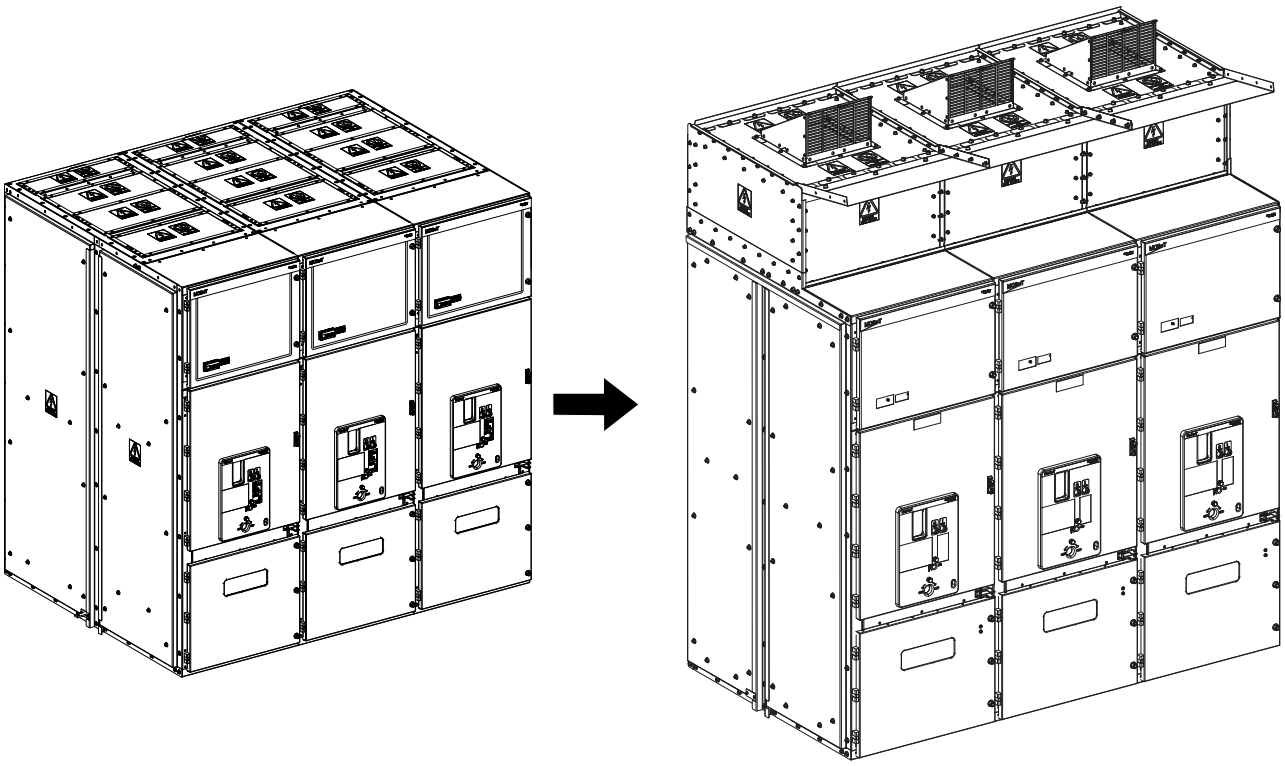

Without pressure relief duct

With pressure relief duct

Step 1: **Assembly of Support Frame**

Follow the below steps to assemble the support frame (Figure 82):

1. Attach the support frame (1) to the cubicle, and install the bolts (2) along with washers (3).

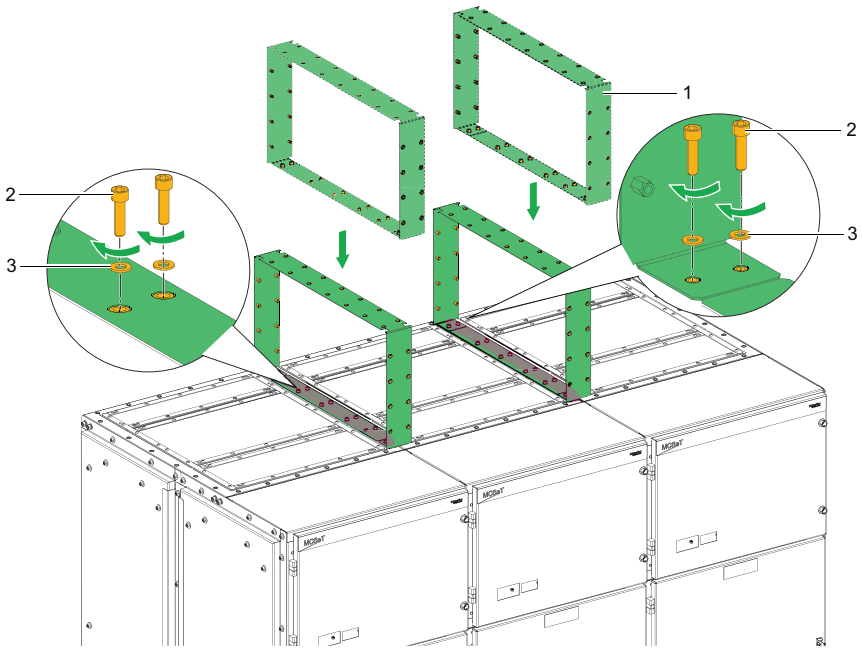

Figure 82
Installation of the Support Frame

1	Support frame	3	Washer
2	Bolt		

Step 2: **Assembly of Tunnel Cover**

Follow the below steps to assemble the tunnel cover (Figure 83):

1. Insert the rivet nuts (3) to the absorber support (4), attach the absorber supports (4) to the tunnel cover, and install the bolts (1) along with washers (2).
2. Attach the tunnel covers (5) to the cubicle and to the support frame, and install the bolts (7) along with washers (6) on both front and back side of the tunnel cover (5).
3. Attach the tunnel covers (5) together, and install the bolts (8) along with washers (9), and hexagonal nuts (10) on both front and back side of the tunnel cover (5).

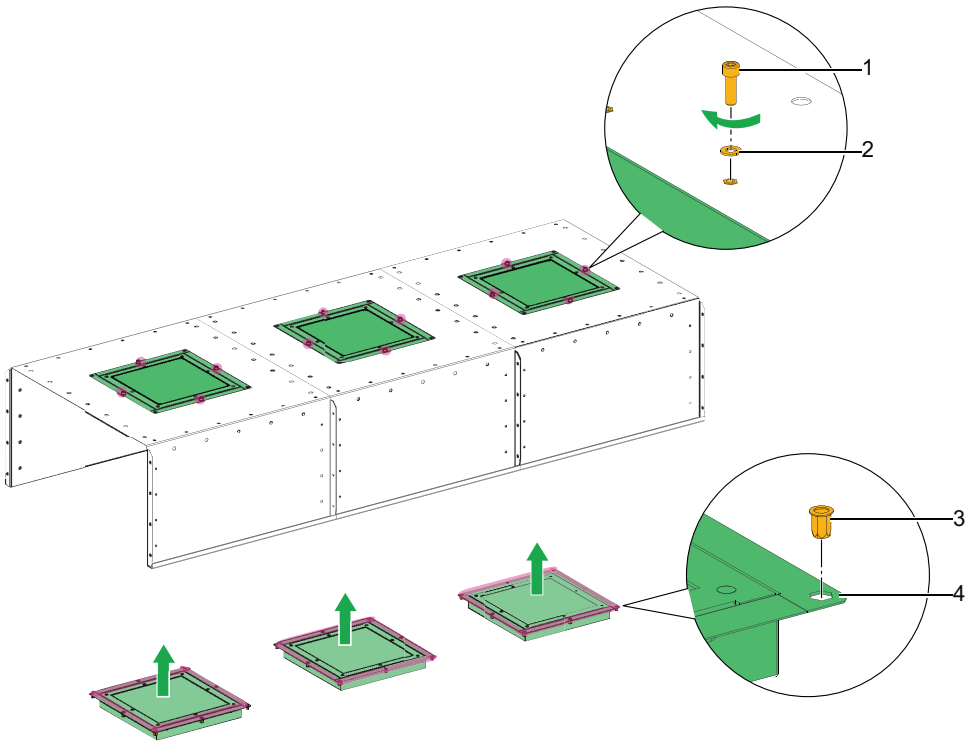

Figure 83
Installation of the Tunnel Cover (Sheet 1 of 2)

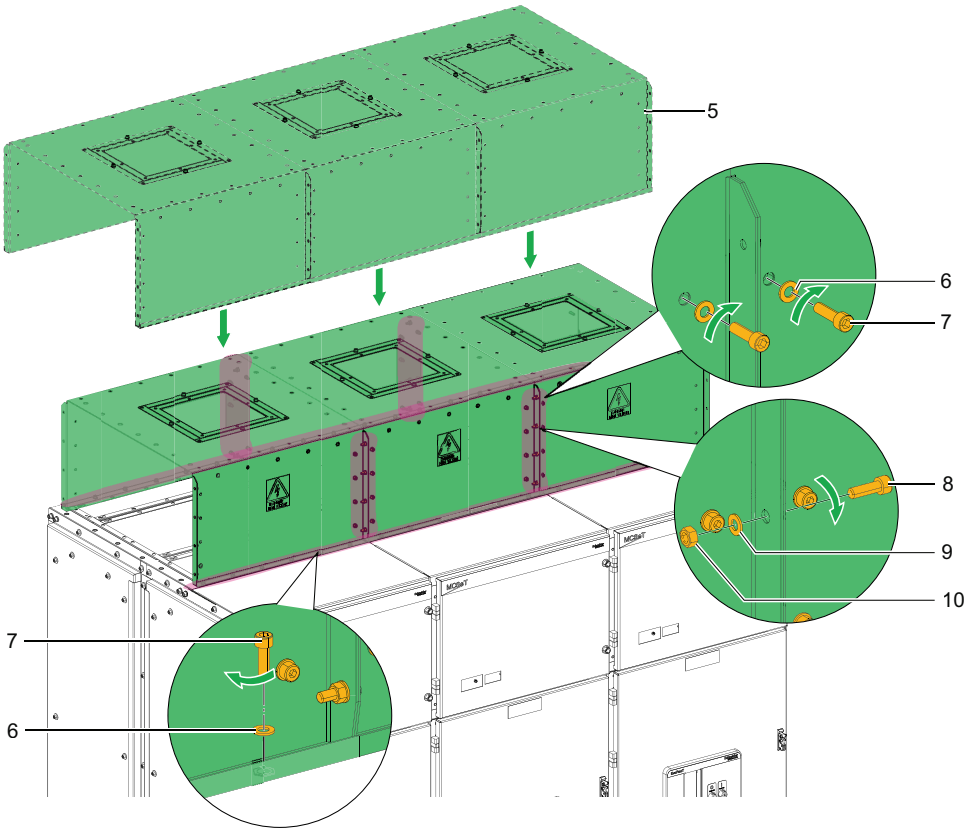

Figure 83
Installation of the Tunnel Cover (Sheet 2 of 2)

1	Bolt	6	Washer
2	Washer	7	Bolt
3	Round rivet nut	8	Bolt
4	Absorber support	9	Washer
5	Tunnel cover	10	Hexagonal nut

Step 3: **Assembly of Tunnel Top Middle Cover**

Follow the below steps to assemble the tunnel top middle cover (Figure 84):

1. Insert the hexagonal rivet nuts (1) on both front and back side of the tunnel cover.
2. Attach the tunnel top middle covers (2) to the tunnel cover, and install the bolts (3) along with washers (4).

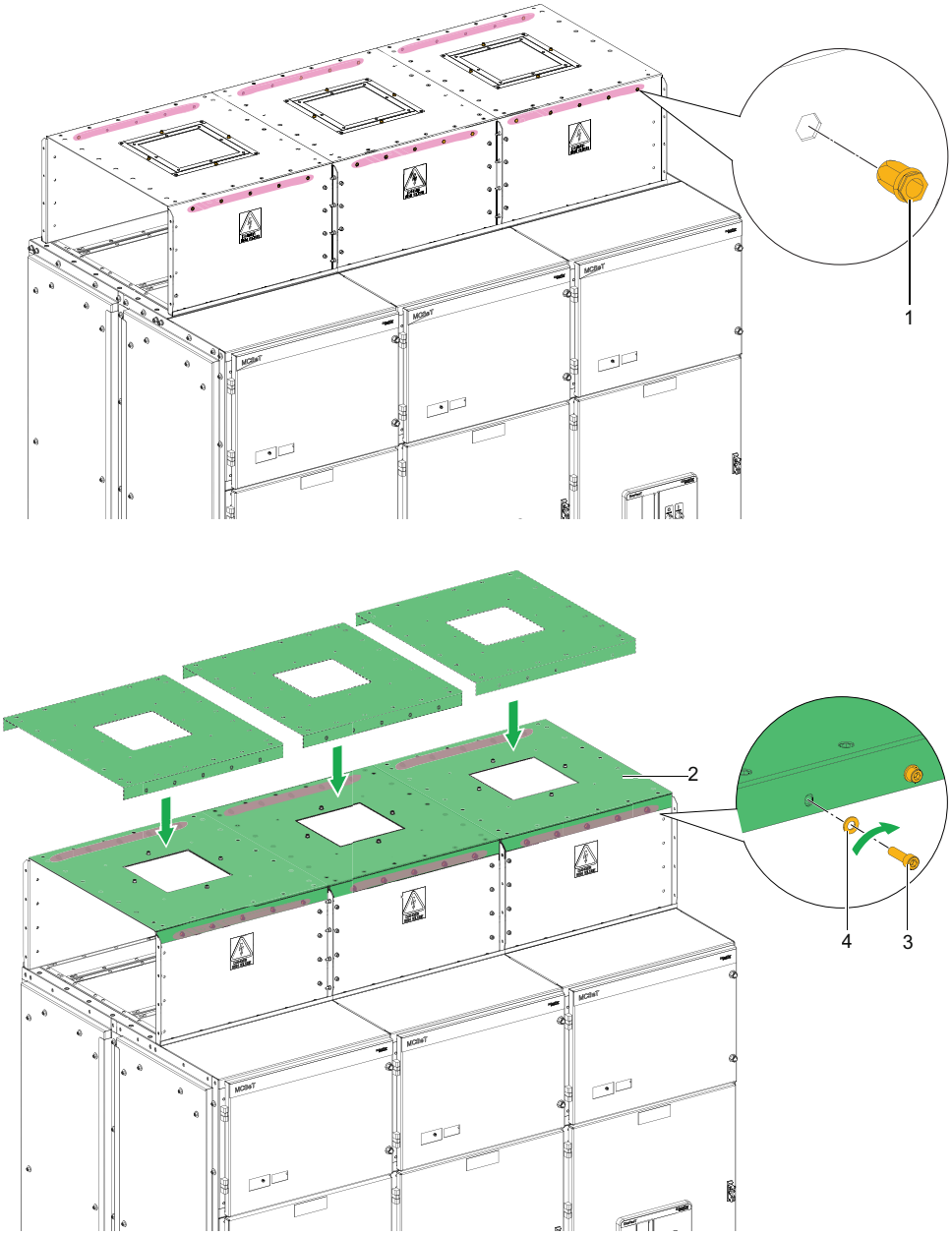

Figure 84
Installation of the Tunnel Top Middle Cover

1	Hexagonal rivet nut	3	Bolt
2	Tunnel top middle cover	4	Washer

Step 4: **Assembly of Tunnel Top Middle Cover**

Follow the below steps to assemble the tunnel top cover (Figure 85):

1. Attach the tunnel top covers (1) to the tunnel top middle cover, and install the bolts (2) along with washers (3).
2. Attach the tunnel top covers (1) together, and install the bolts (4) along with washers (5), and hexagonal nuts (6).

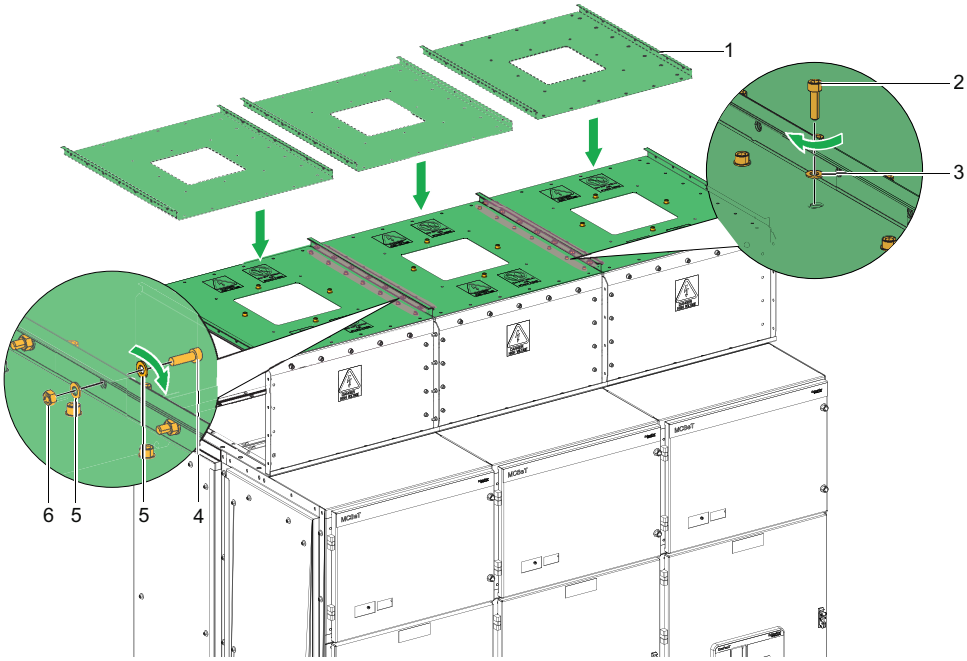

Figure 85
Installation of the Tunnel Top Middle Cover

1	Tunnel top middle cover	4	Bolt
2	Bolt	5	Washer
3	Washer	6	Hexagonal nut

Step 5: **Assembly of Tunnel Side Cover**

Follow the below steps to assemble the tunnel side cover (Figure 86):

1. Attach the tunnel side covers (1) to the tunnel top cover, and install the bolts (3) along with washers (2).

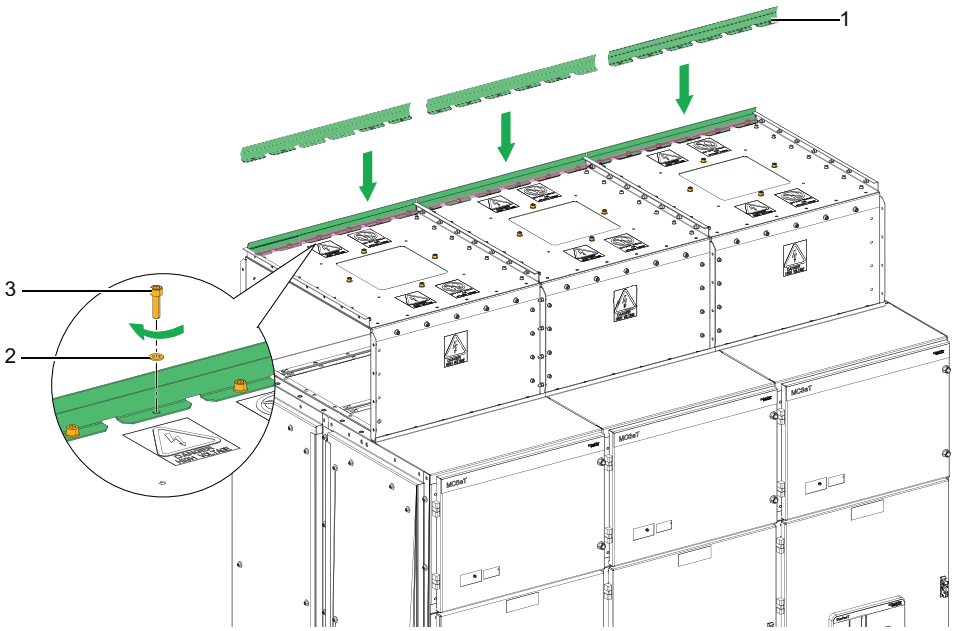

Figure 86
Installation of the Tunnel Side Cover

1	Tunnel side cover	3	Bolt
2	Washer		

Step 6: **Assembly of Tunnel Deflector**

Follow the below steps to assemble the tunnel deflector (Figure 87):

1. Attach the tunnel deflector (5) and tunnel deflector support (1) to the tunnel top cover, and install the bolts (6) along with washers (7).
2. Attach the tunnel deflector support (1) to the tunnel deflector (5), and install the bolts (2) along with washers (3), and hexagonal nuts (4).
3. Attach the tunnel deflector (5) together, and install the bolts (2) along with washers (3), and hexagonal nuts (4).

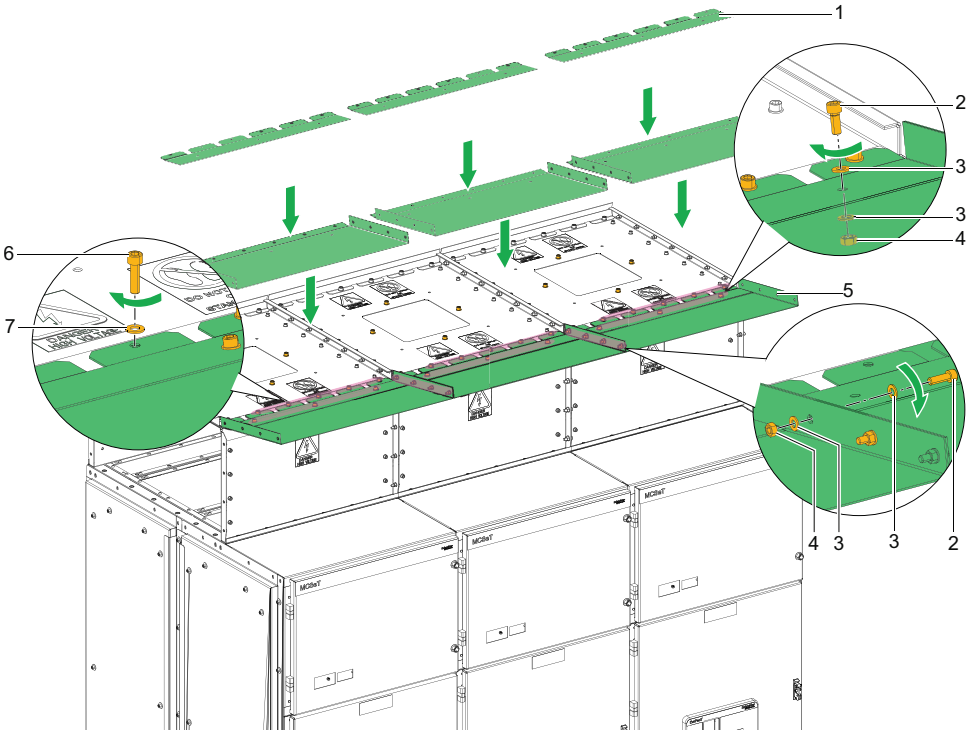

Figure 87
Installation of the Tunnel Deflector

1	Tunnel deflector support	5	Tunnel deflector
2	Bolt	6	Bolt
3	Washer	7	Washer
4	Hexagonal nut		

Step 7: **Assembly of Absorber**

Follow the below steps to assemble the absorber (Figure 88):

1. Install the absorber (1) to the tunnel top cover, and install the bolts (3) along with washers (2).

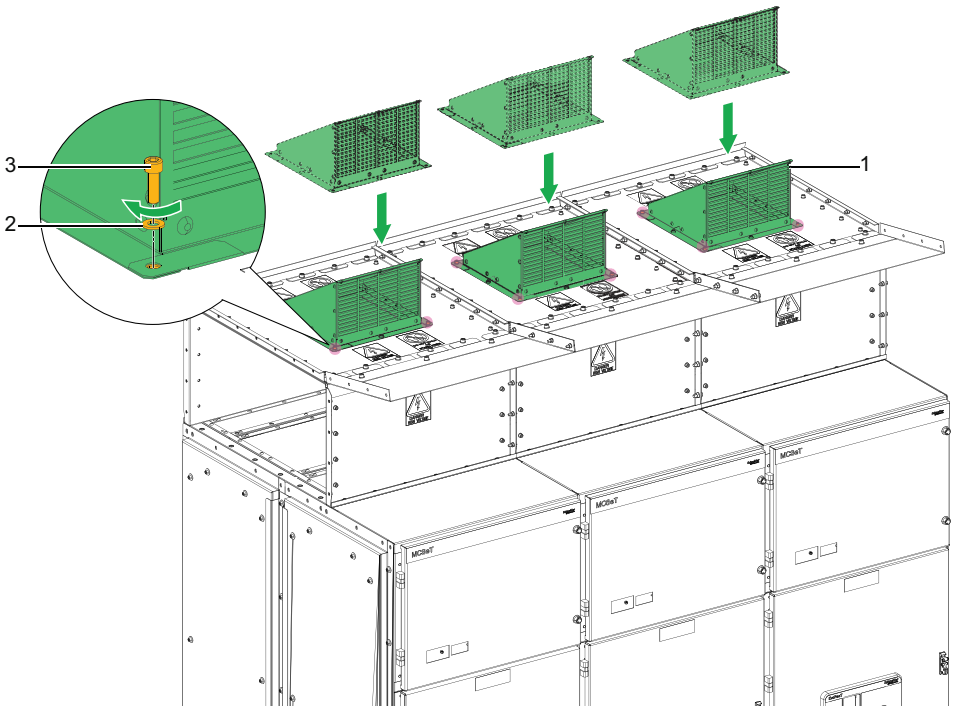

Figure 88
Installation of the Absorber

1	Absorber	3	Bolt
2	Washer		

Step 8: **Assembly of End Frame Bracket**

Follow the below steps to assemble the end frame brackets (Figure 89):

1. Insert the round rivet nuts (1) to the end frame brackets (4).
2. Install the end frame brackets (4) to the tunnel cover, and install the bolts (3) along with washers (2).

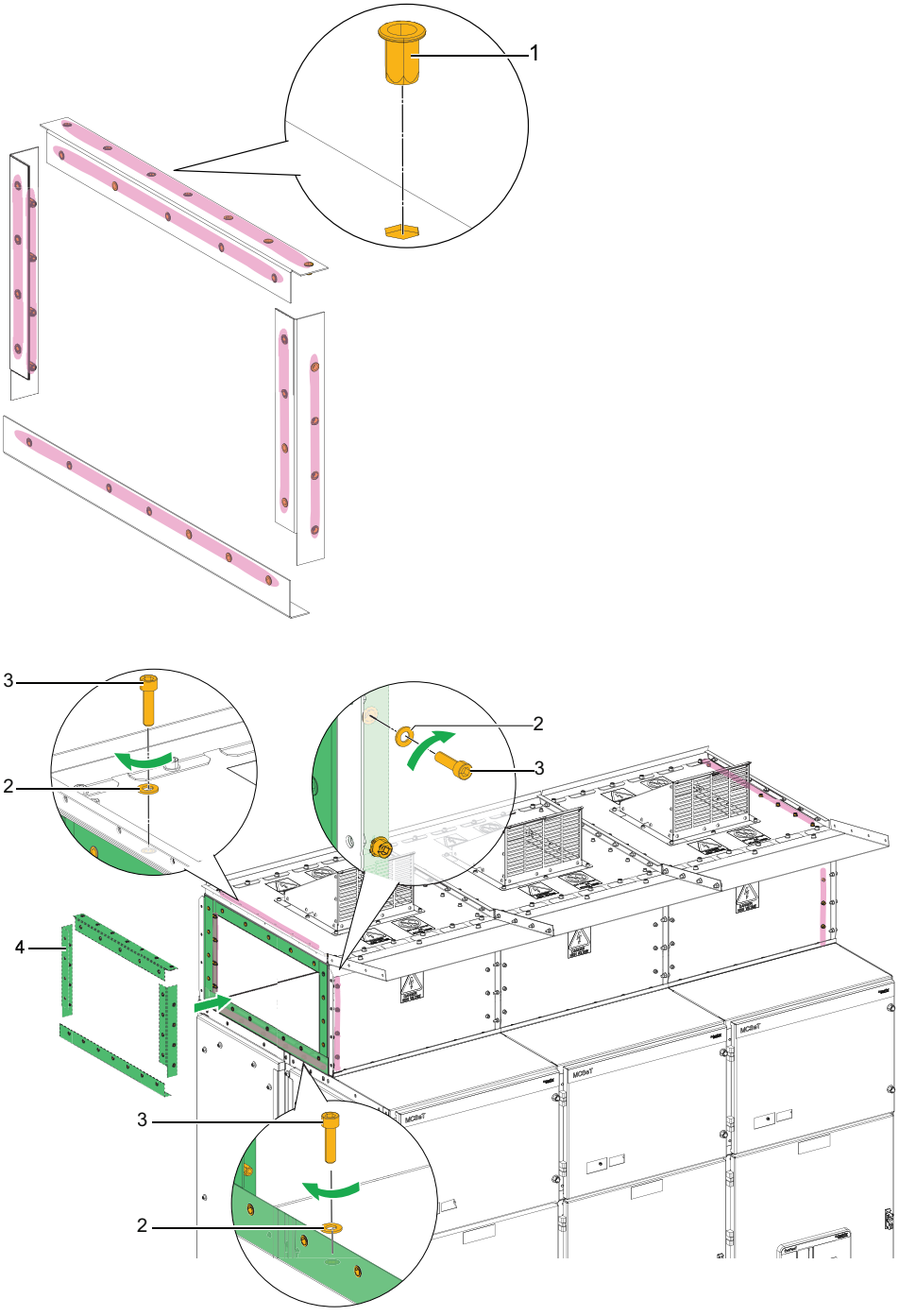

Figure 89
Installation of the End Frame Bracket

1	Round rivet nut	3	Bolt
2	Washer	4	End frame bracket

Step 9: **Assembly of End Cover**

Follow the below steps to assemble the end covers (Figure 90):

1. Attach the end plates (4) to the tunnel covers, and install the bolts (1) along with washers (2), and hexagonal nuts (3).
2. Attach the end covers (7) to the tunnel covers, and install the bolts (1) along with washers (2), and hexagonal nuts (3).
3. Attach the end covers (7) to the end plates (4), and install the bolts (5) along with washers (6).
4. Attach the tunnel end wall coupler (8), and install the bolts (5) along with washers (6).

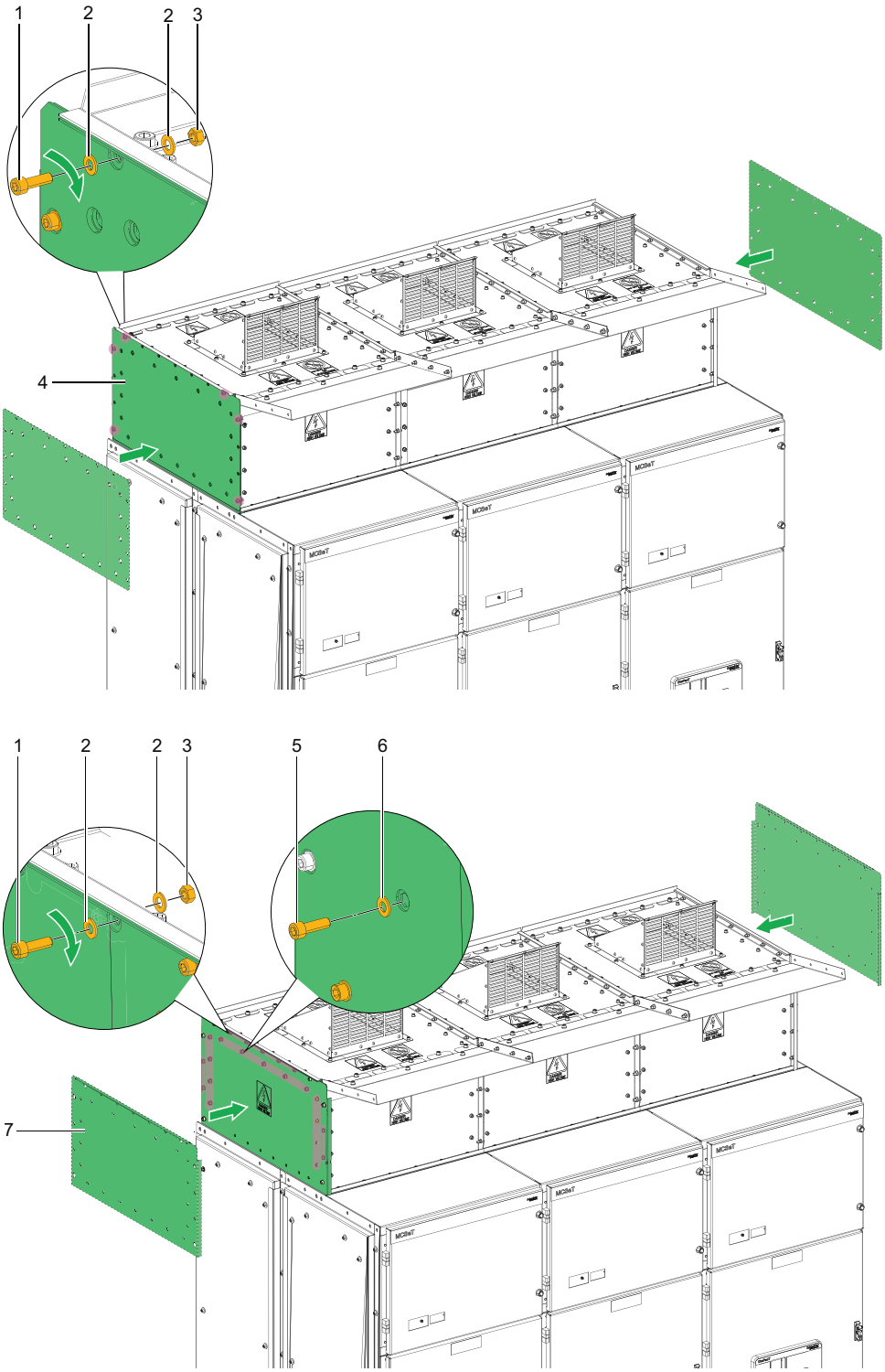

Figure 90
Installation of the End Cover (Sheet 1 of 2)

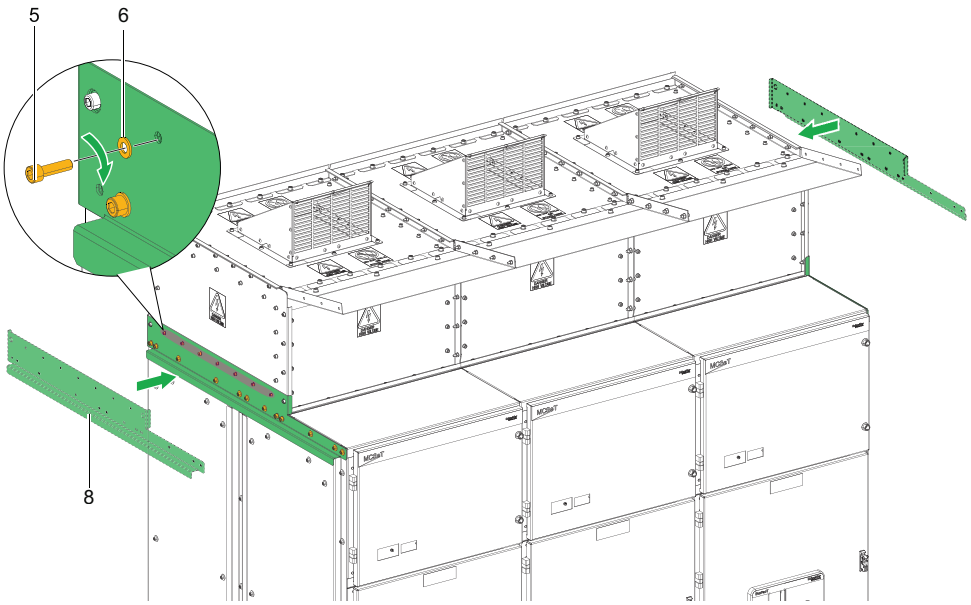

Figure 90
Installation of the End Cover (Sheet 2 of 2)

1	Bolt	5	Bolt
2	Washer	6	Washer
3	Hexagonal nut	7	End cover
4	End plate	8	End wall coupler

Assembly of Internal Exhaust Tunnel – 24 kV

Follow the steps 1–10 to assemble the internal exhaust tunnel.

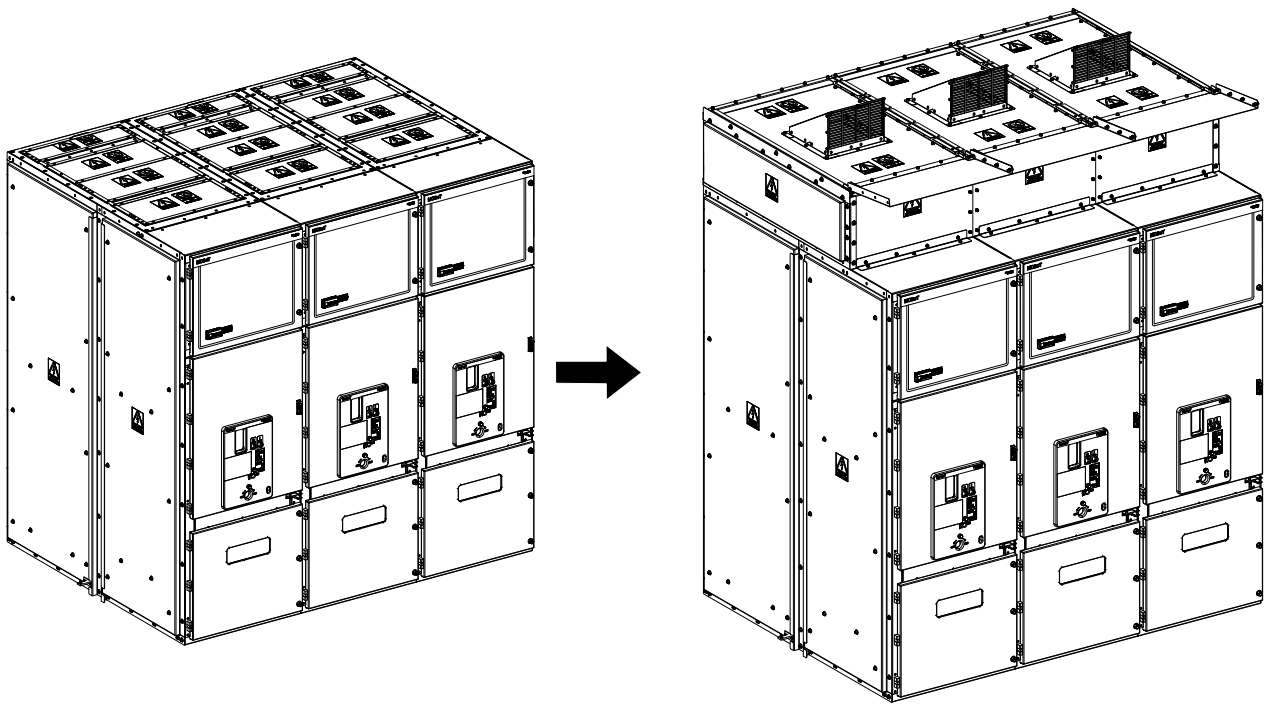

Without pressure relief duct

With pressure relief duct

Step 1: **Assembly of L-Bracket**

Follow the below steps to assemble the L-bracket (Figure 91):

1. Insert the rivet nuts (1) on the top panel of the LV Compartment.
2. Attach the L-bracket (4) to the LV compartment, and install the bolts (2) along with washers (3).

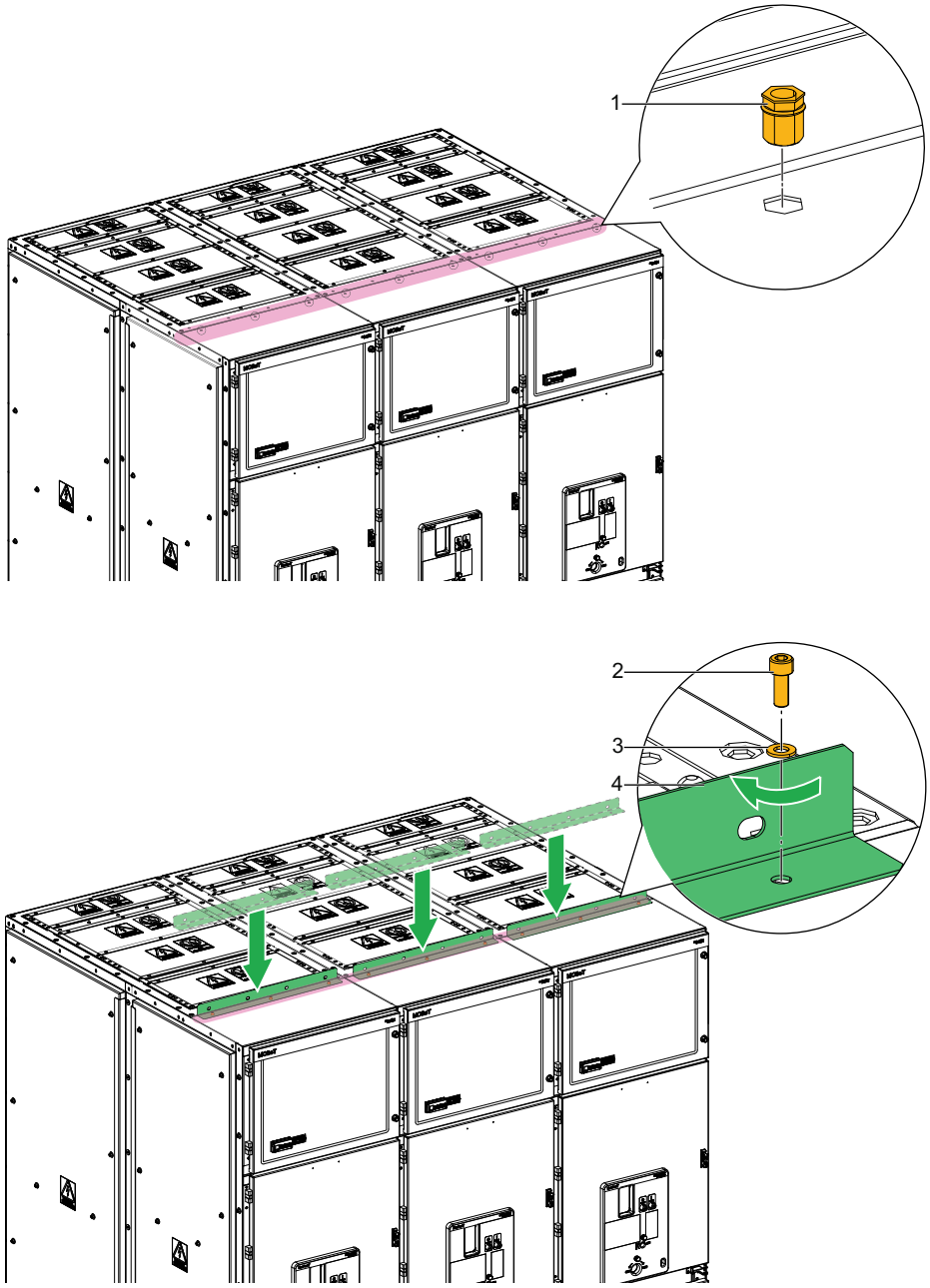

Figure 91
Installation of the L-Bracket

1	Rivet nut	3	Washer
2	Bolt	4	L-bracket

Step 2: **Assembly of Front Cover**

Follow the below steps to assemble the front cover (Figure 92):

1. Insert the rivet nuts (2) to the front cover (1).
2. Attach the front cover (1) to the L-bracket, and install the bolts (3) along with washers (4).

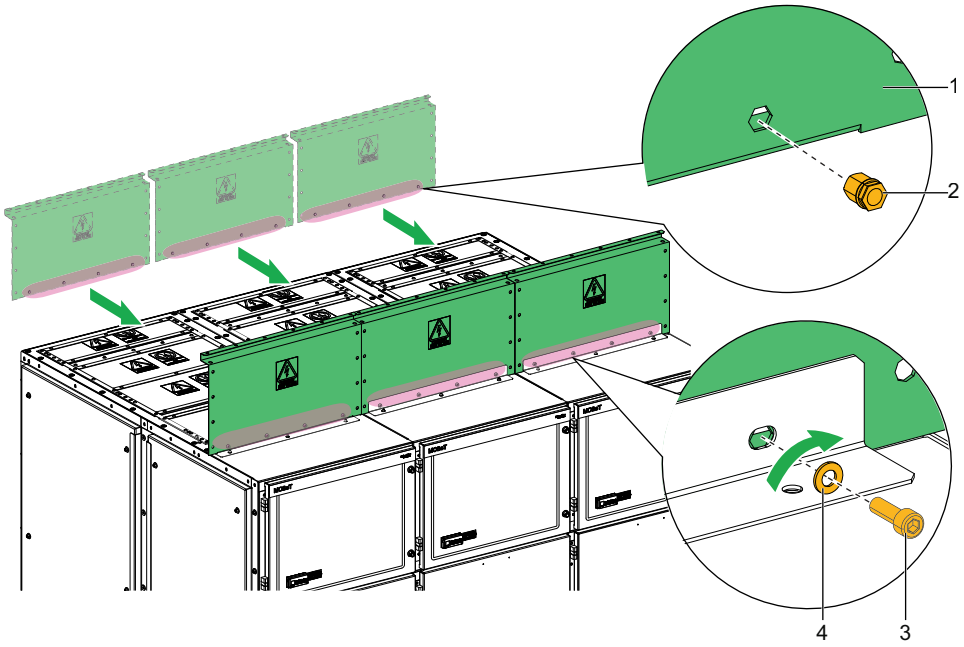

Figure 92
Installation of the Front Cover

1	Front cover	3	Bolt
2	Rivet nut	4	Washer

Step 3: **Assembly of Support Frame**

Follow the below steps to assemble the support frame (Figure 93):

1. Insert the round rivet nuts (1) on top of the cubicle.
2. Insert the hexagonal rivet nuts (2) to the support frame (5).
3. Attach the support frame (5) to the front cover and to the cubicle, and install the bolts (3) along with washers (4).
4. Attach the corners of the support frame (5) to the front cover and to the cubicle, and install the bolts (6) along with washers (7).

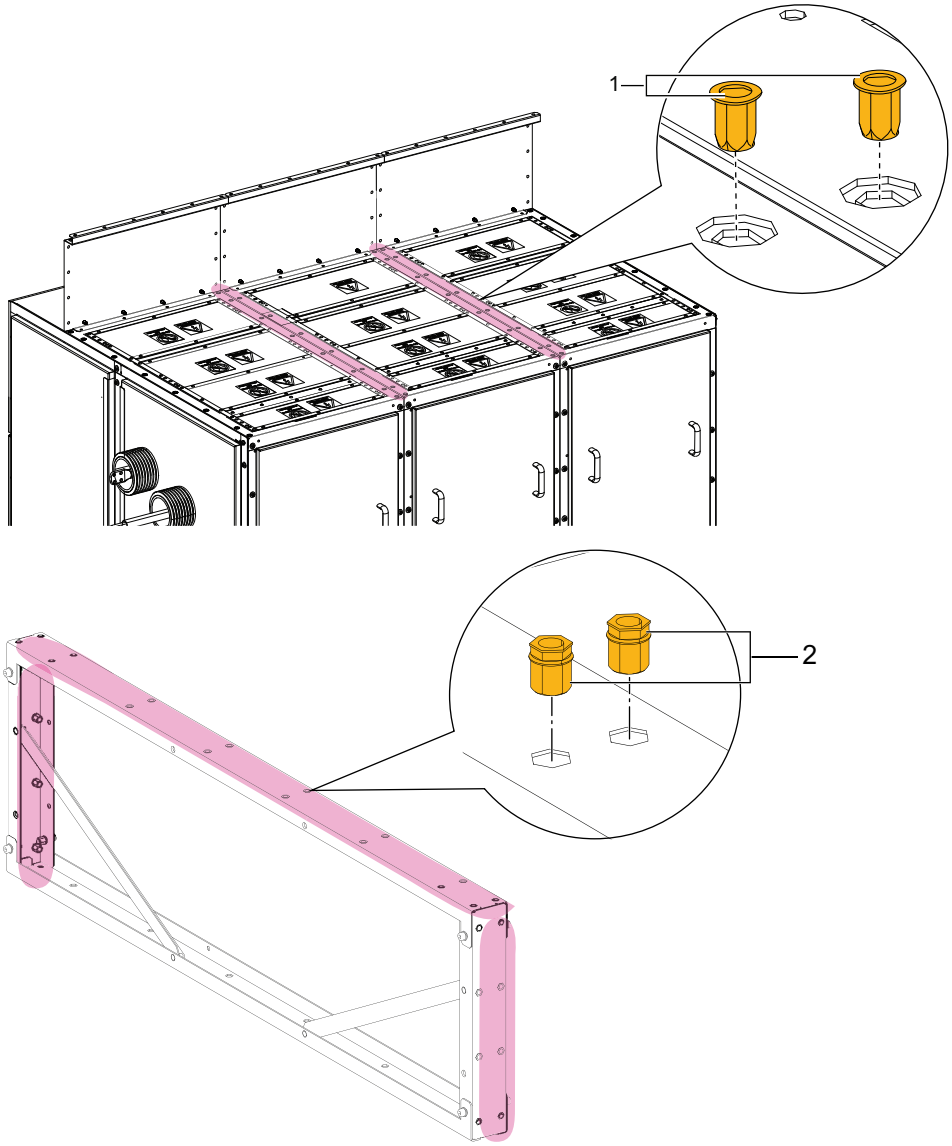

Figure 93
Installation of the Front Cover (Sheet 1 of 2)

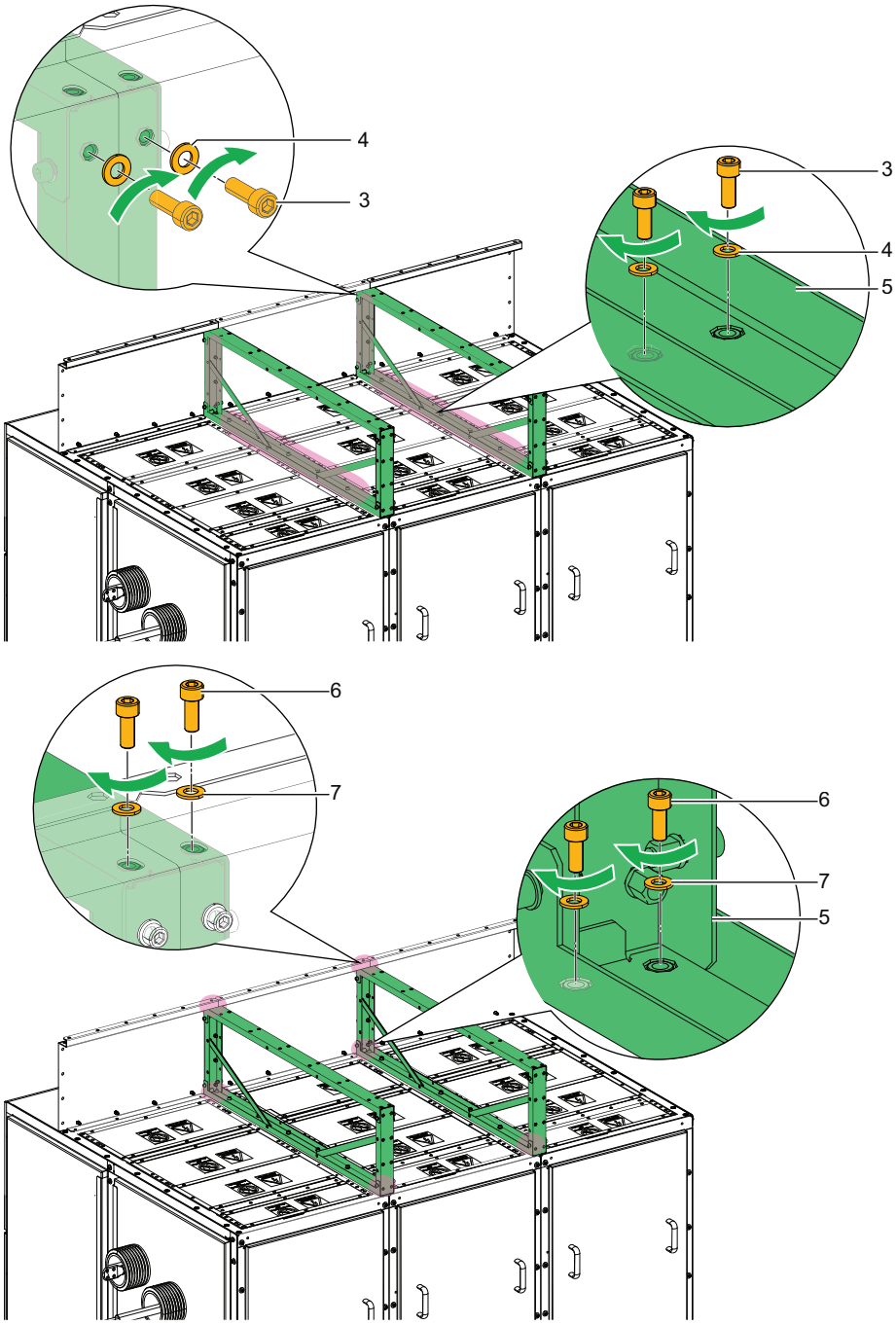

Figure 93
Installation of the Support Frame (Sheet 2 of 2)

1	Round rivet nut	5	Support frame
2	Hexagonal rivet nut	6	Bolt
3	Bolt	7	Washer
4	Washer		

Step 4: **Assembly of End Frame**

Follow the below steps to assemble the end frame (Figure 94):

1. Insert the round rivet nuts (1) on top of the cubicle.
2. Insert the hexagonal rivet nuts (2) to the end frame (5).
3. Attach the end frame (5) to the front cover and to the cubicle, and install the bolts (3) along with washers (4).
4. Attach the corners of the end frame (5) to the front cover and to the cubicle, and install the bolts (6) along with washers (7).

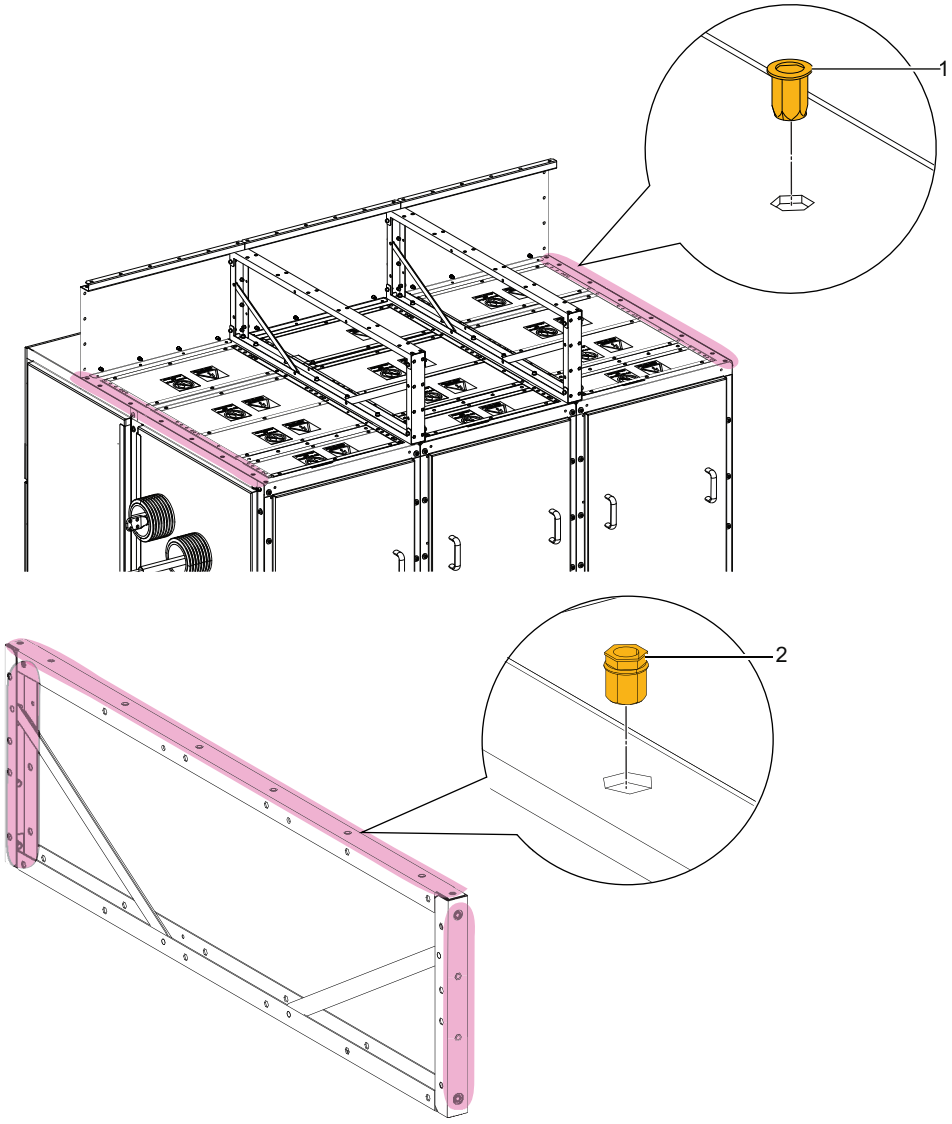

Figure 94
Installation of the End Frame (Sheet 1 of 2)

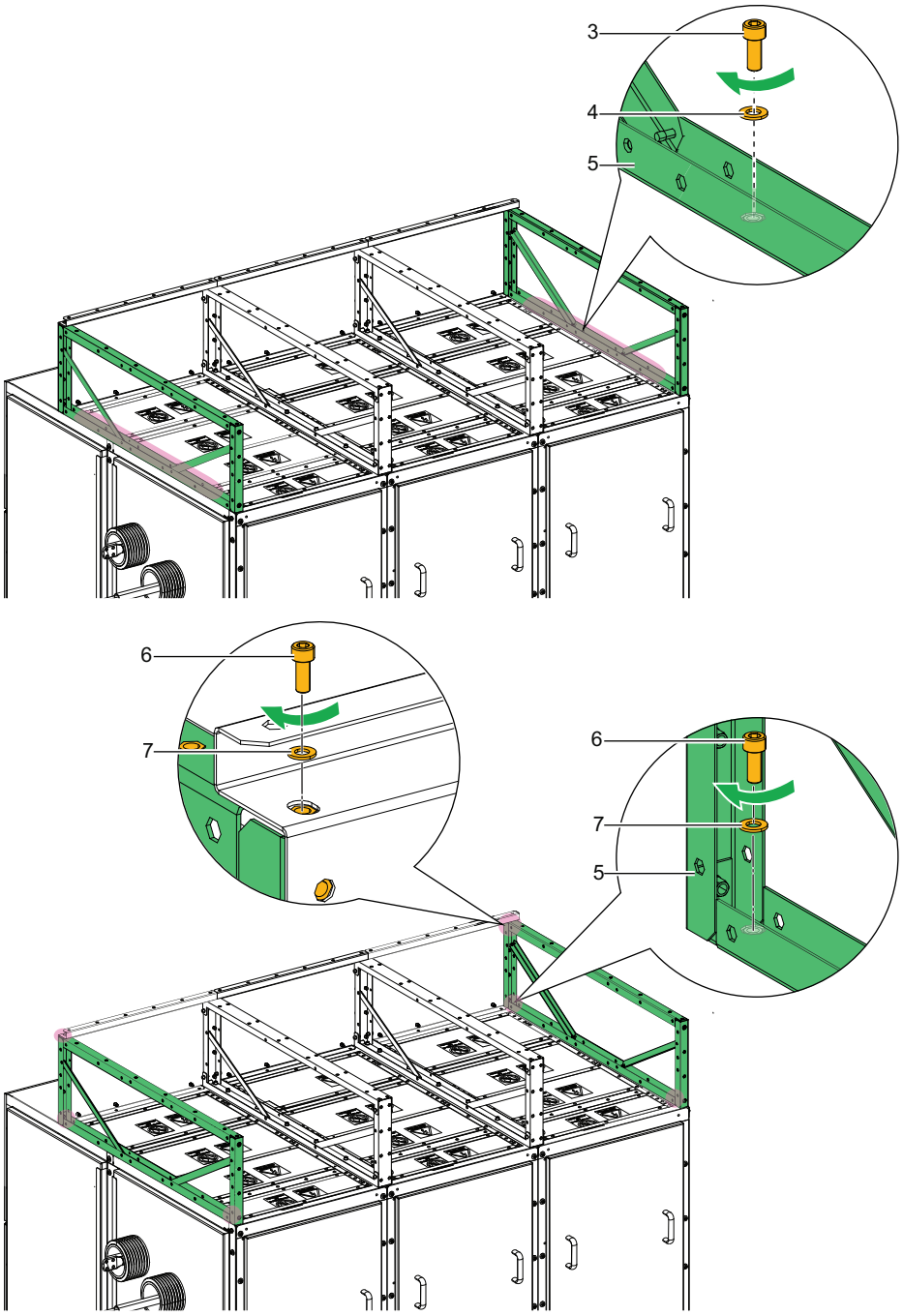

Figure 94
Installation of the End Frame (Sheet 2 of 2)

1	Round rivet nut	5	End frame
2	Hexagonal rivet nut	6	Bolt
3	Bolt	7	Washer
4	Washer		

Step 5: **Assembly of Rear Cover**

Follow the below steps to assemble the rear cover (Figure 95):

1. Attach the rear cover (3) to the rear side of the frames, and install the bolts (1) along with washers (2).
2. Attach the top of rear cover (3) to the frames, and install the bolts (1) along with washers (2).

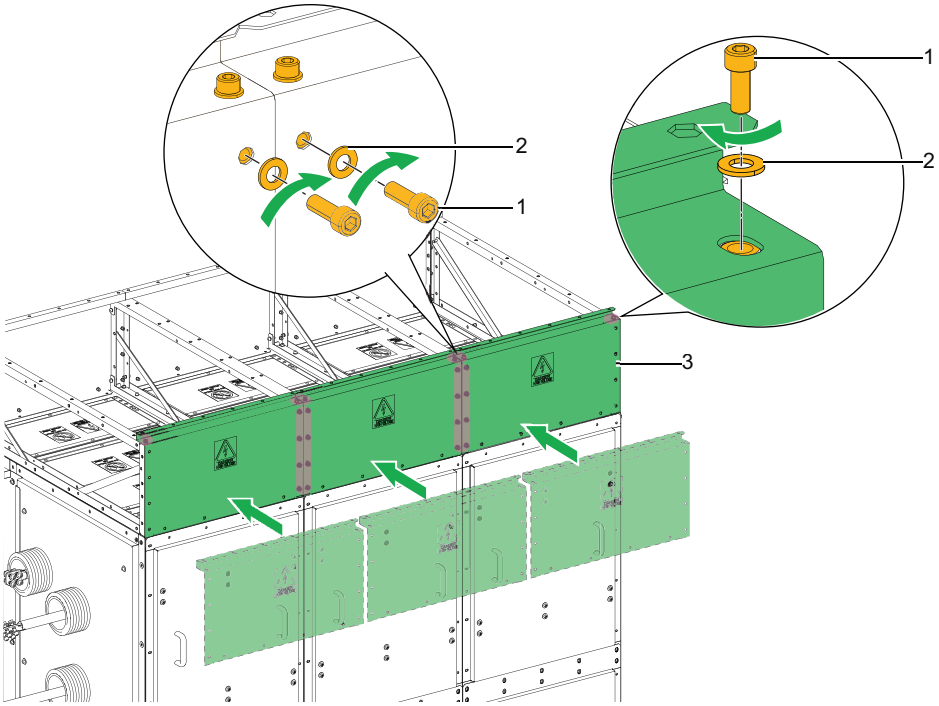

Figure 95
Installation of the Rear Cover

1	Bolt	3	Rear frame
2	Washer		

Step 6: **Assembly of Top Cover**

Follow the below steps to assemble the top cover (Figure 96):

1. Insert the rivet nuts (1) to the top of front cover and rear cover.
2. Insert the rivet nuts (1) to both left and right sides of top cover (5) for the inter panel connection.
3. Insert the rivet nuts (1) to the absorber support (4), attach the absorber support (4) to the top cover (5), and install the bolts (2) along with washers (3).
4. Attach the top covers (5) to the support frames and end frames, and install the bolts (2) along with washers (3).
5. Attach the top covers (5) together, and install the bolts (2) along with washers (3).

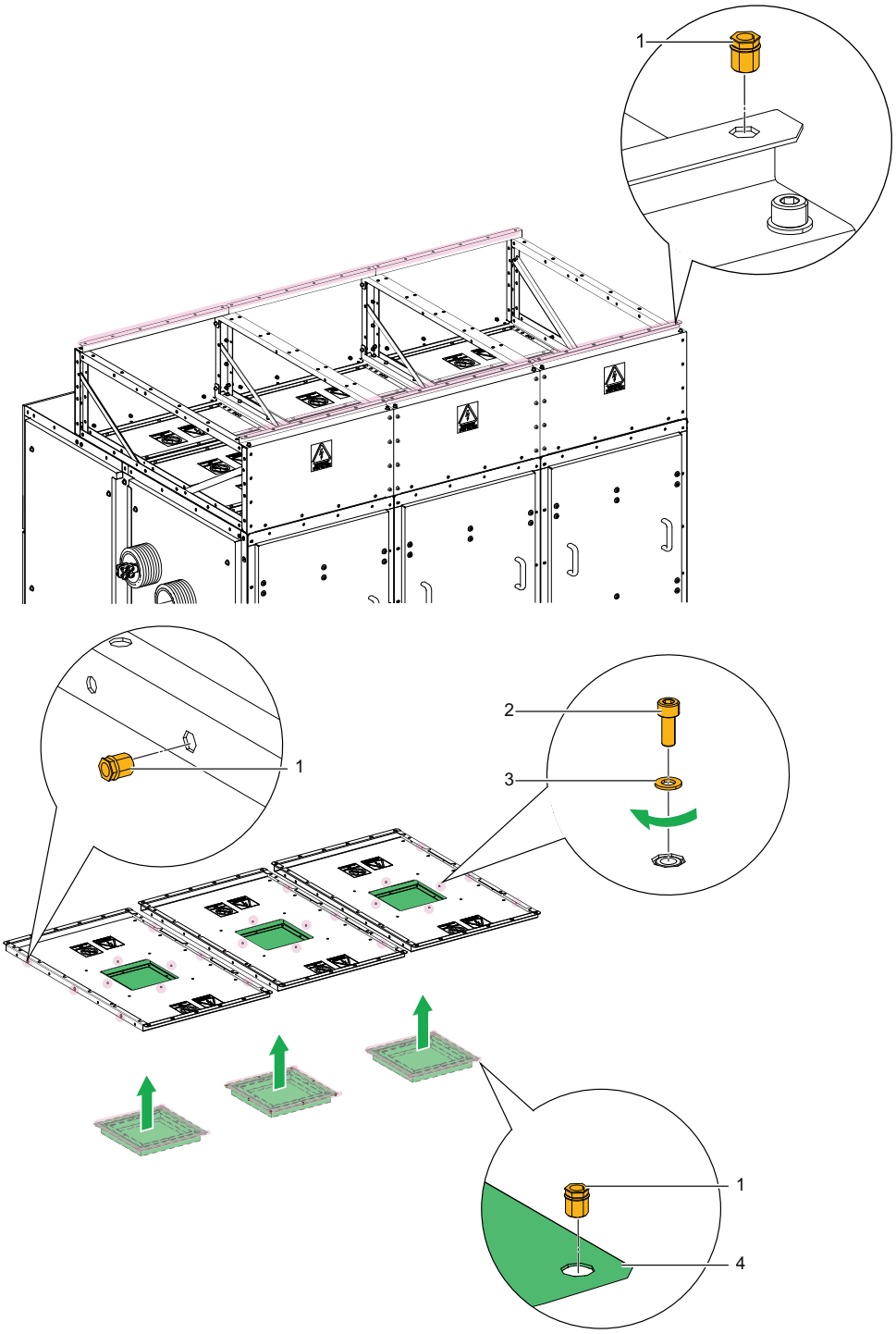

Figure 96
Installation of the Top Cover (Sheet 1 of 2)

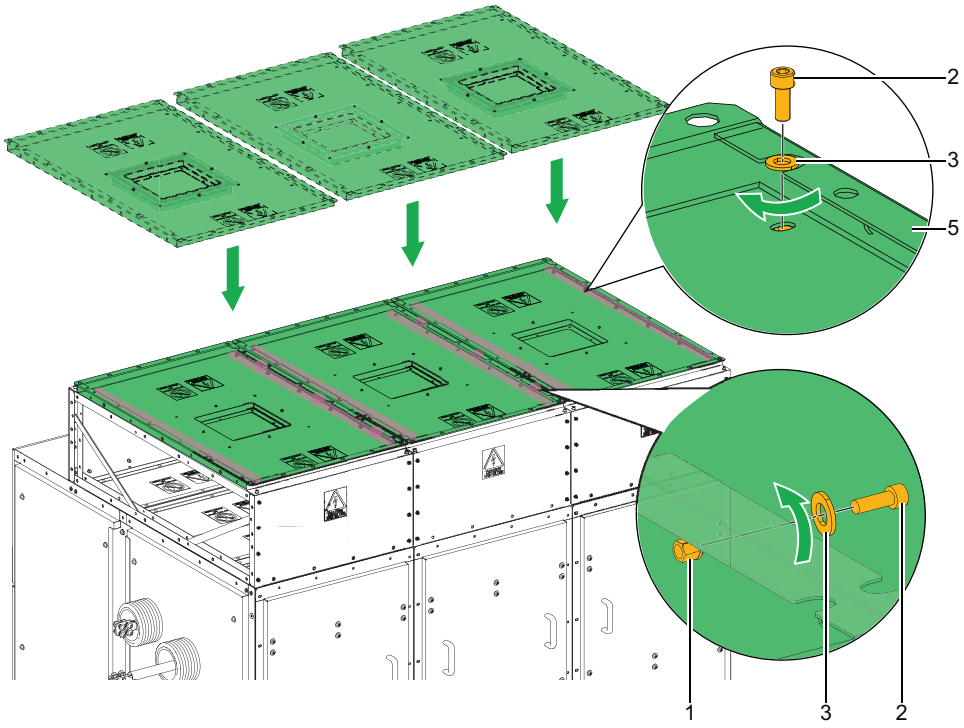

Figure 96
Installation of the Top Cover (Sheet 2 of 2)

1	Rivet nut	4	Absorber support
2	Bolt	5	Top cover
3	Washer		

Step 7: **Assembly of Absorber**

Follow the below steps to assemble the absorber (Figure 97):

1. Install the absorber (3) to the top cover, and install the bolts (1) along with washers (2).

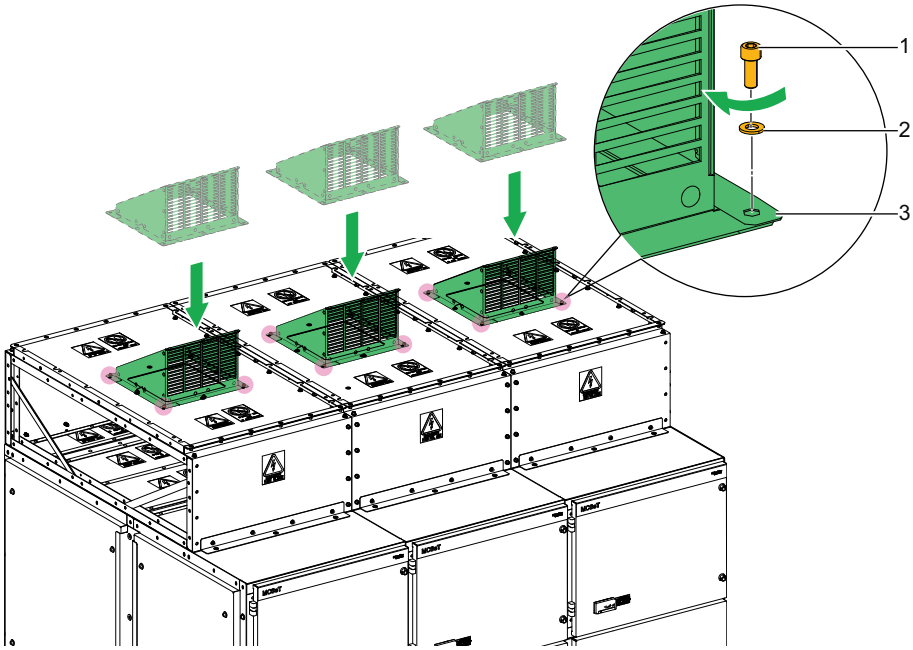

Figure 97
Installation of the Absorber

1	Bolt	3	Absorber
2	Washer		

Step 8: **Assembly of Deflector**

Follow the below step to assemble the deflector (Figure 98):

1. Attach the deflector (3) to the top cover, and install the bolts (1) along with washers (2).

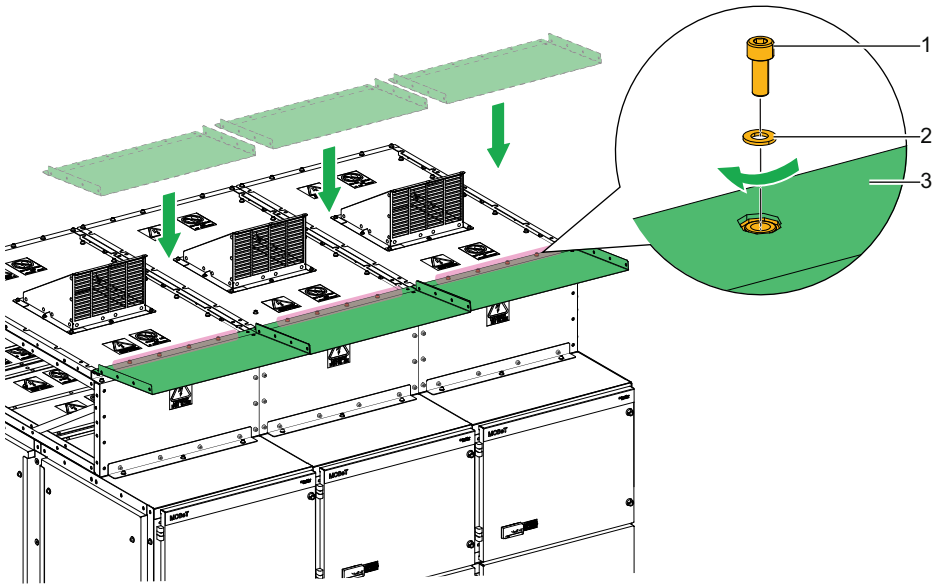

Figure 98
Installation of the Deflector

1	Bolt	3	Deflector
2	Washer		

Step 9: **Assembly of Deflector Support**

Follow the below steps to assemble the deflector support (Figure 99):

1. Insert the rivet nuts (1) to the deflector to attach the deflector support (4).
2. Attach the deflector support (4) to the deflector, and install the bolts (2) along with washers (3), and hexagonal nuts (5).

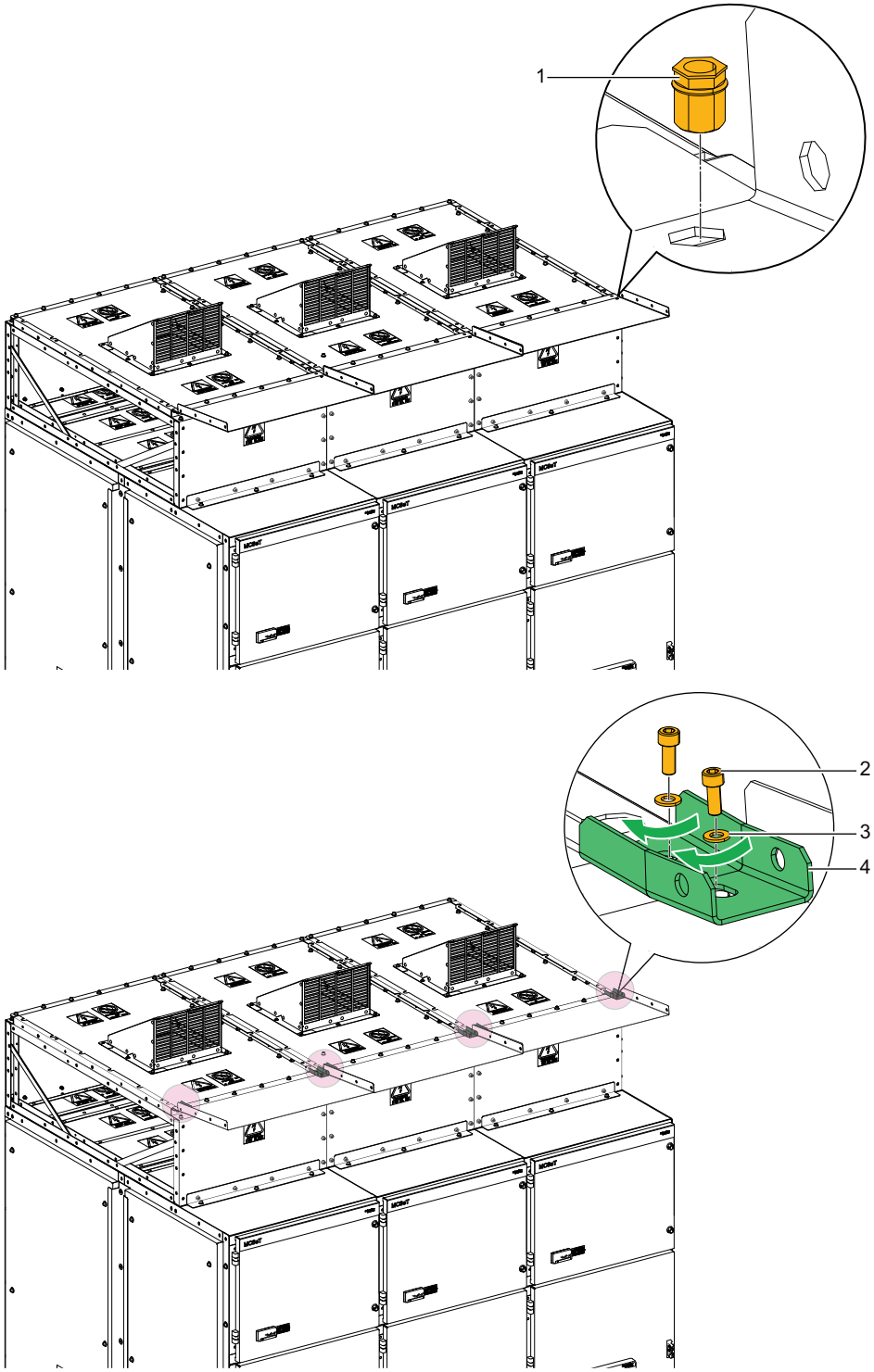

Figure 99
Installation of the Deflector Support (Sheet 1 of 2)

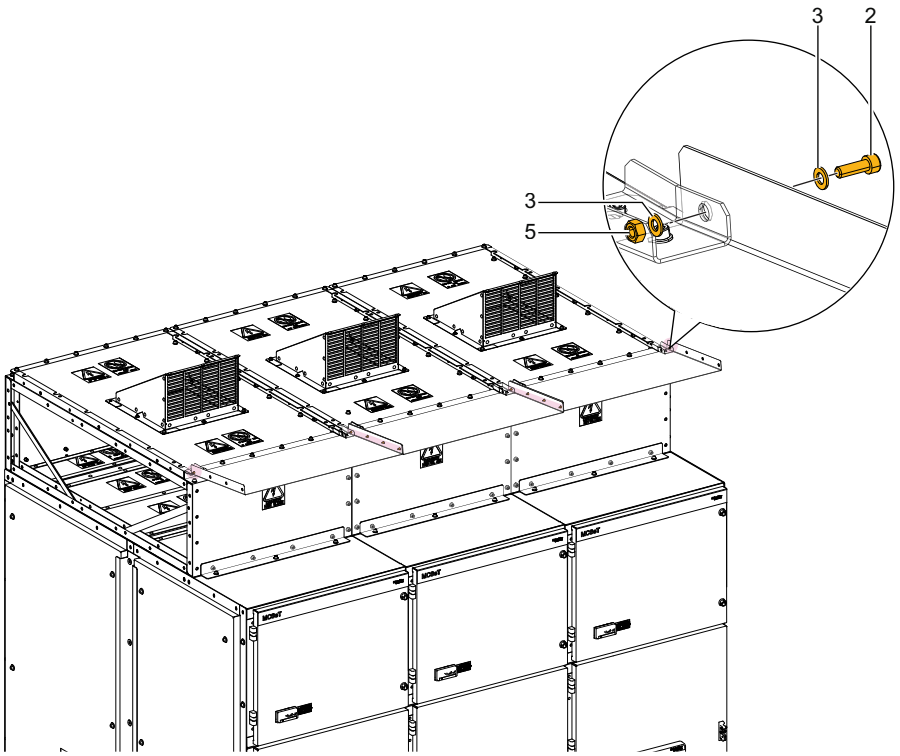

Figure 99
Installation of the Deflector Support (Sheet 2 of 2)

1	Rivet nut	4	Deflector support
2	Bolt	5	Hexagonal nut
3	Washer		

Step 10: **Assembly of End Cover:**

Follow the below steps to assemble the end cover (Figure 100):

1. Insert the rivet nuts (1) to the sides of left and right end frame.
2. Attach the end cover (4) to the end frame, rear cover, front cover, and top cover, and install the bolts (2) along with washers (3).

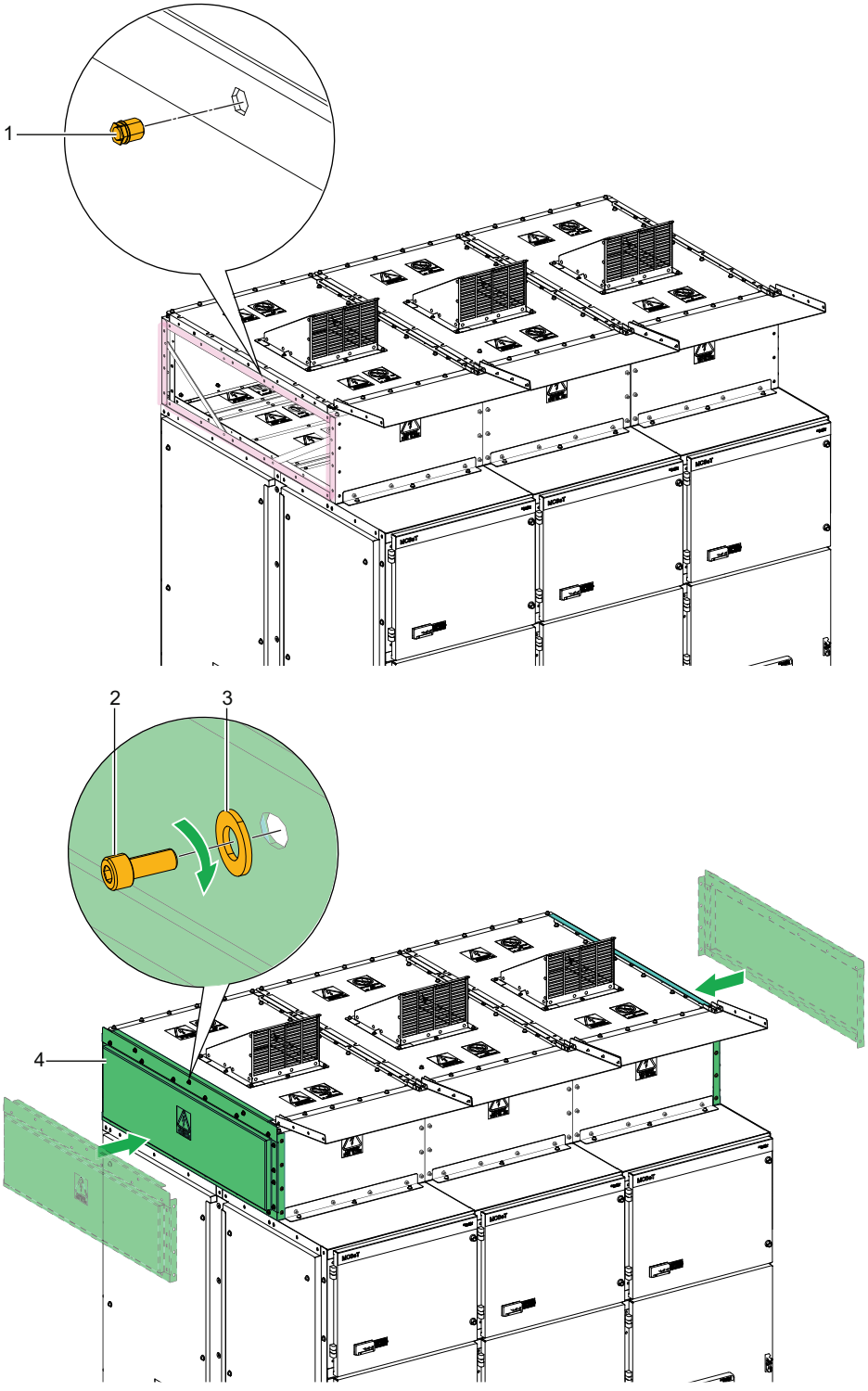

Figure 100
Installation of the End Cover

1	Rivet nut	3	Washer
2	Bolt	4	End cover

External Exhaust Tunnel

Assembly of External Exhaust Tunnel – 24 kV

Follow the steps 1–10 to assemble the external exhaust tunnel.

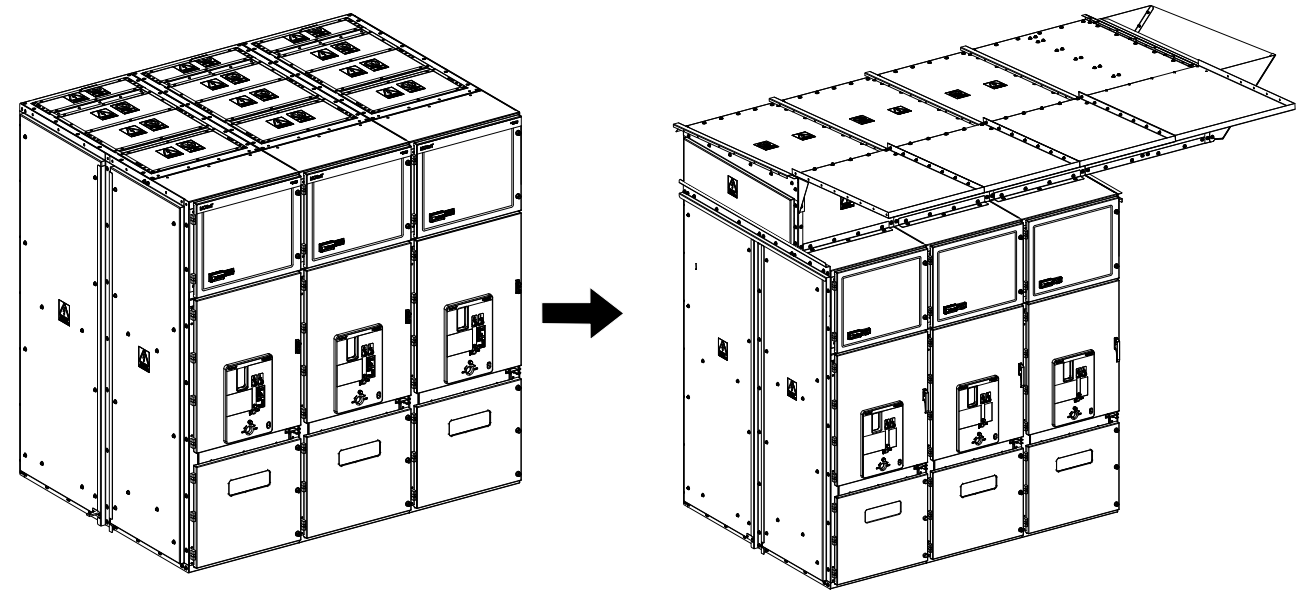

Without pressure relief duct

With pressure relief duct

Step 1: **Assembly of L-Bracket**

Follow the below steps to assemble the L-bracket (Figure 101):

1. Insert the rivet nuts (1) on the top panel of the LV Compartment.
2. Attach the L-bracket (4) to the LV compartment, and install the bolts (2) along with washers (3).

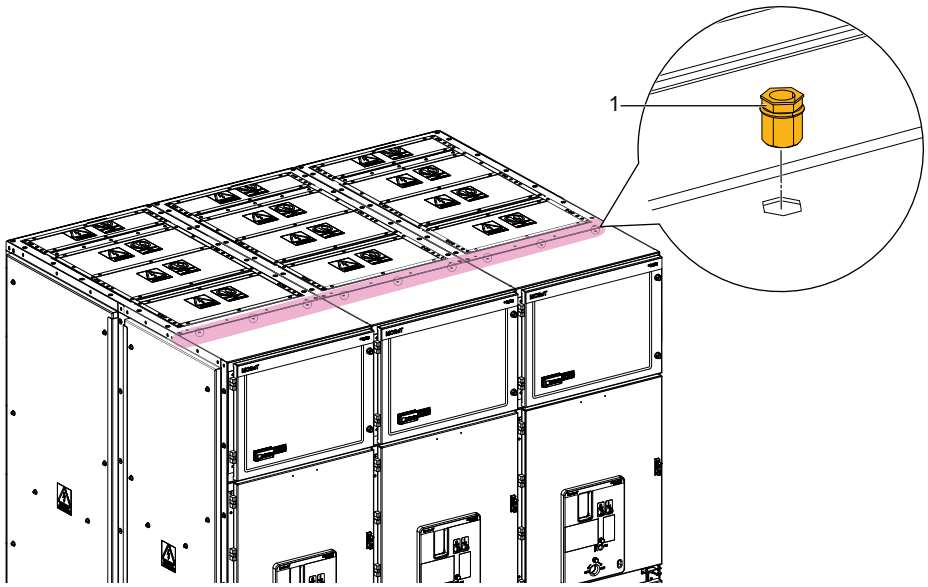

Figure 101
Installation of the L-Bracket (Sheet 1 of 2)

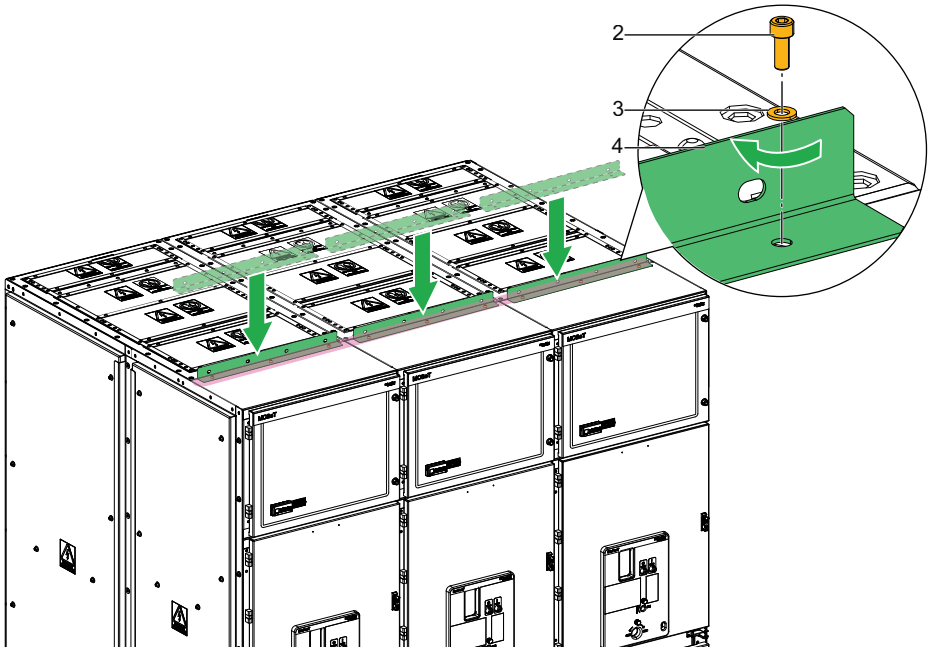

Figure 101
Installation of the L-Bracket (Sheet 2 of 2)

1	Rivet nut	3	Washer
2	Bolt	4	L-bracket

Step 2: **Assembly of Front Cover**

Follow the below steps to assemble the front cover (Figure 102):

1. Insert the rivet nuts (2) to the front cover (1).
2. Attach the front cover (1) to the L-bracket, and install the bolts (3) along with washers (4).

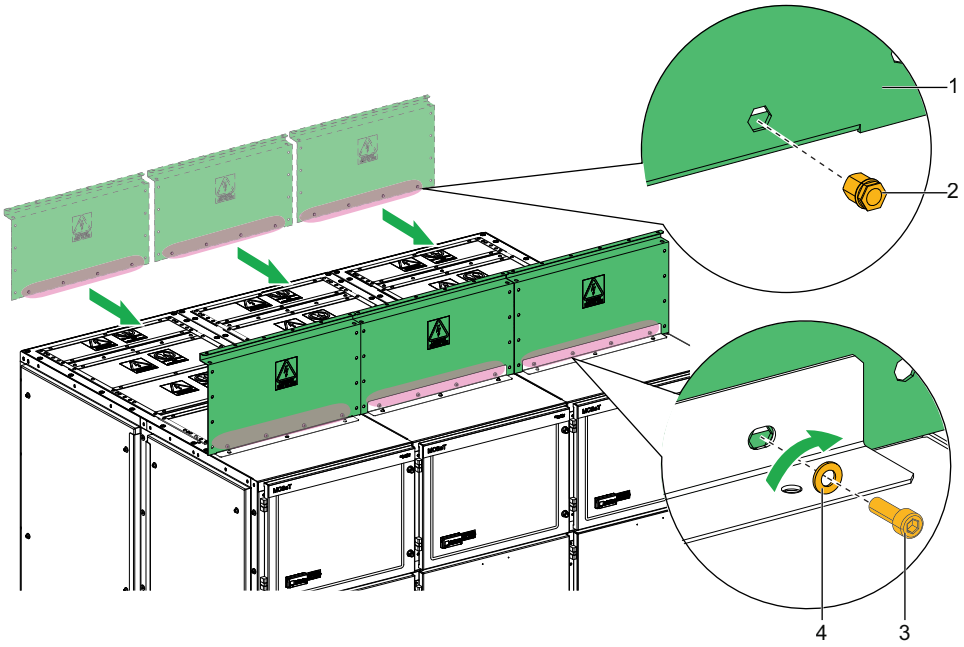

Figure 102
Installation of the Front Cover

1	Front cover	3	Bolt
2	Rivet nut	4	Washer

Step 3: **Assembly of Support Frame**

Follow the below steps to assemble the support frame (Figure 103):

1. Insert the round rivet nuts (1) on top of the cubicle.
2. Attach the gasket (3) to the support frame (6).
3. Insert the hexagonal rivet nuts (2) to the support frame (6).
4. Attach the support frame (6) to the front cover and to the cubicle, and install the bolts (4) along with washers (5).
5. Attach the corners of the support frame (6) to the front cover and to the cubicle, and install the bolts (7) along with washers (8).

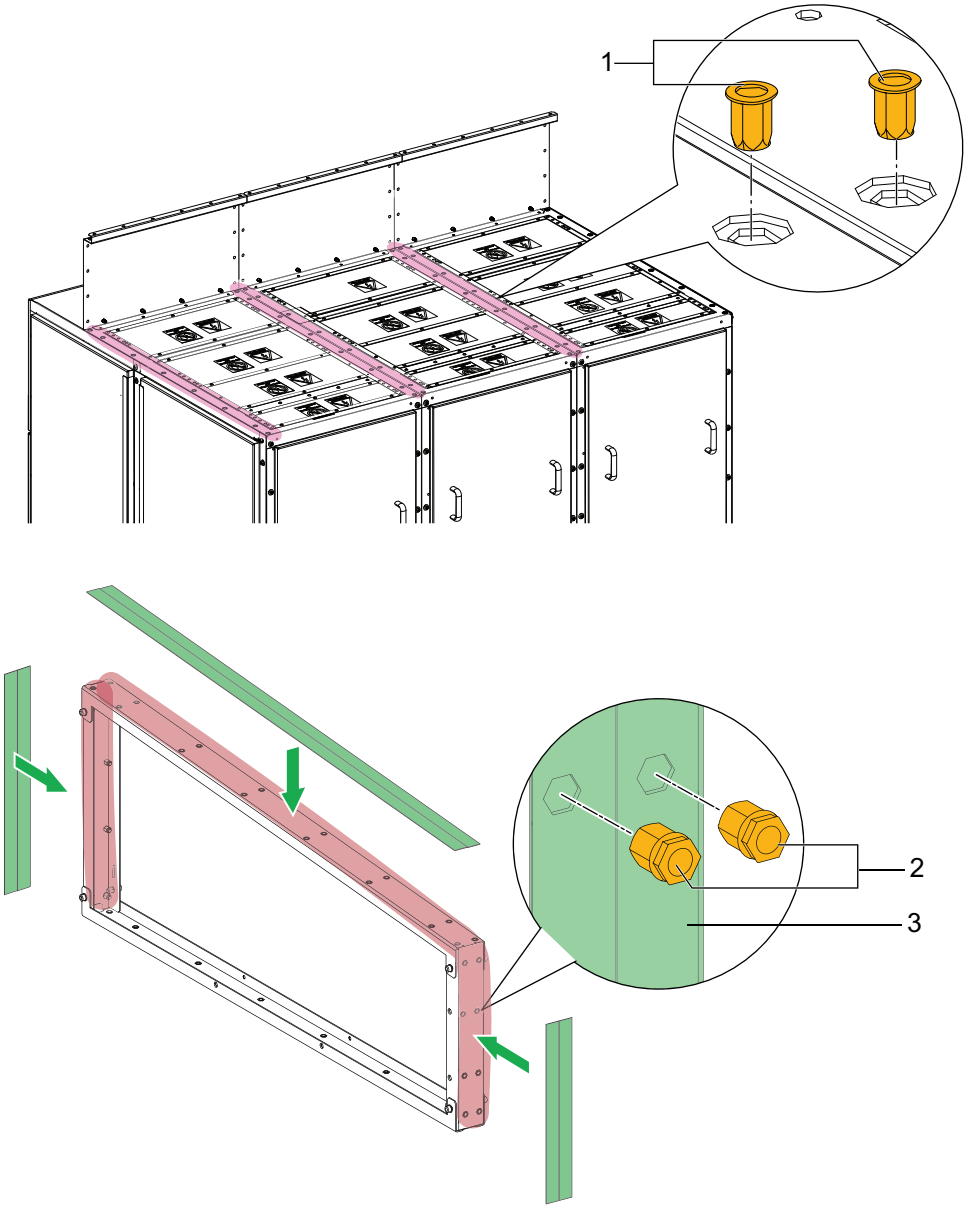

Figure 103
Installation of the Support Frame (Sheet 1 of 2)

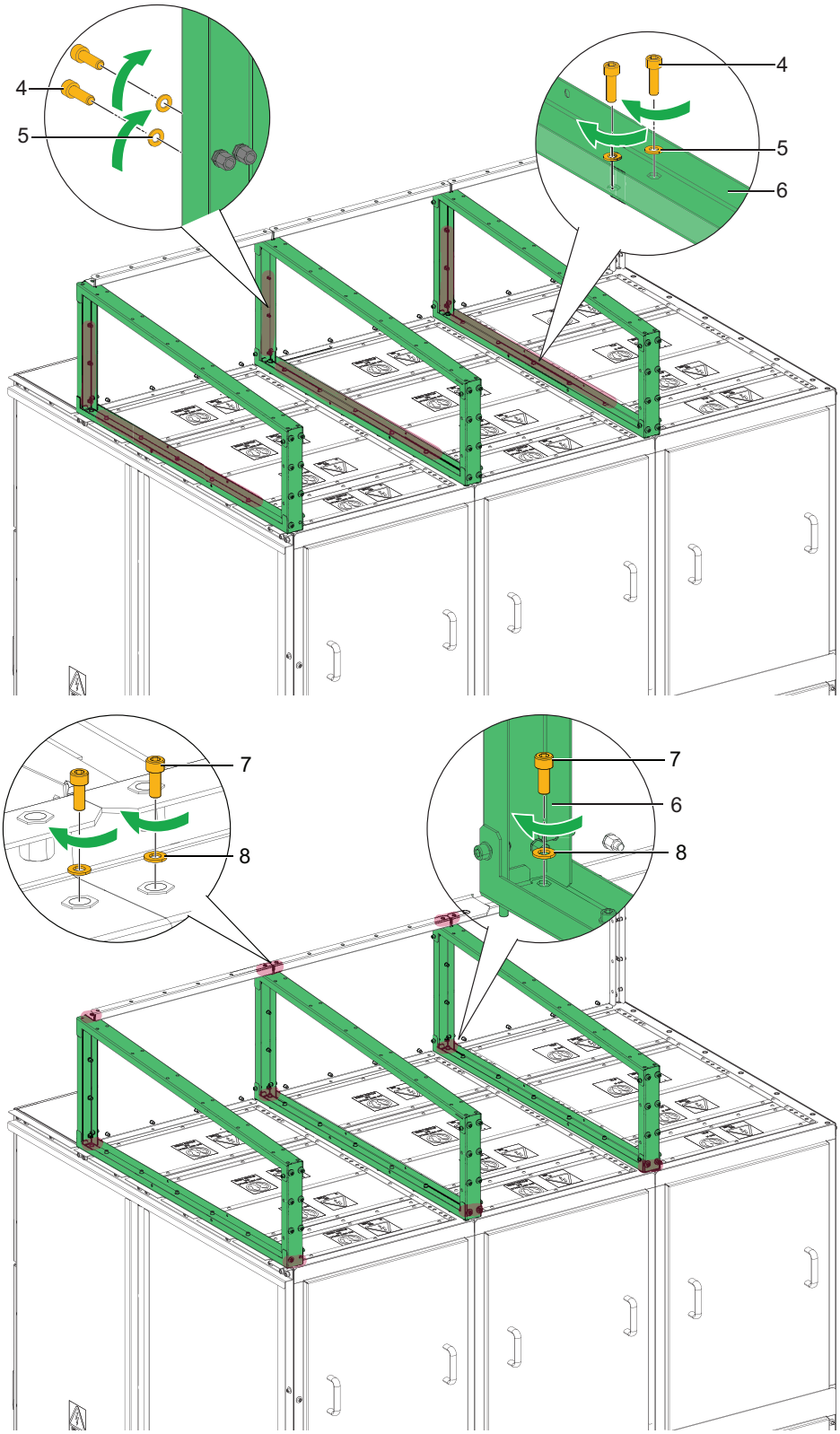

Figure 103
Installation of the Support Frame (Sheet 2 of 2)

1	Round rivet nut	5	Washer
2	Hexagonal rivet nut	6	Support frame
3	Gasket	7	Bolt
4	Bolt	8	Washer

Step 4: **Assembly of End Frame**

Follow the below steps to assemble the end frame (Figure 104):

NOTE: The extended tunnel can be assembled on the right or left side depending on the customer requirement and convenience.

1. Insert the rivet nuts (1) on top of the cubicle.
2. Attach the gasket (3) to the end frame (6).
3. Insert the rivet nuts (2) to the end frame (6).
4. Attach the end frame (6) to the front cover and to the cubicle, and install the bolts (4) along with washers (5).
5. Attach the corners of the end frame (6) to the front cover and to the cubicle, and install the bolts (7) along with washers (8).

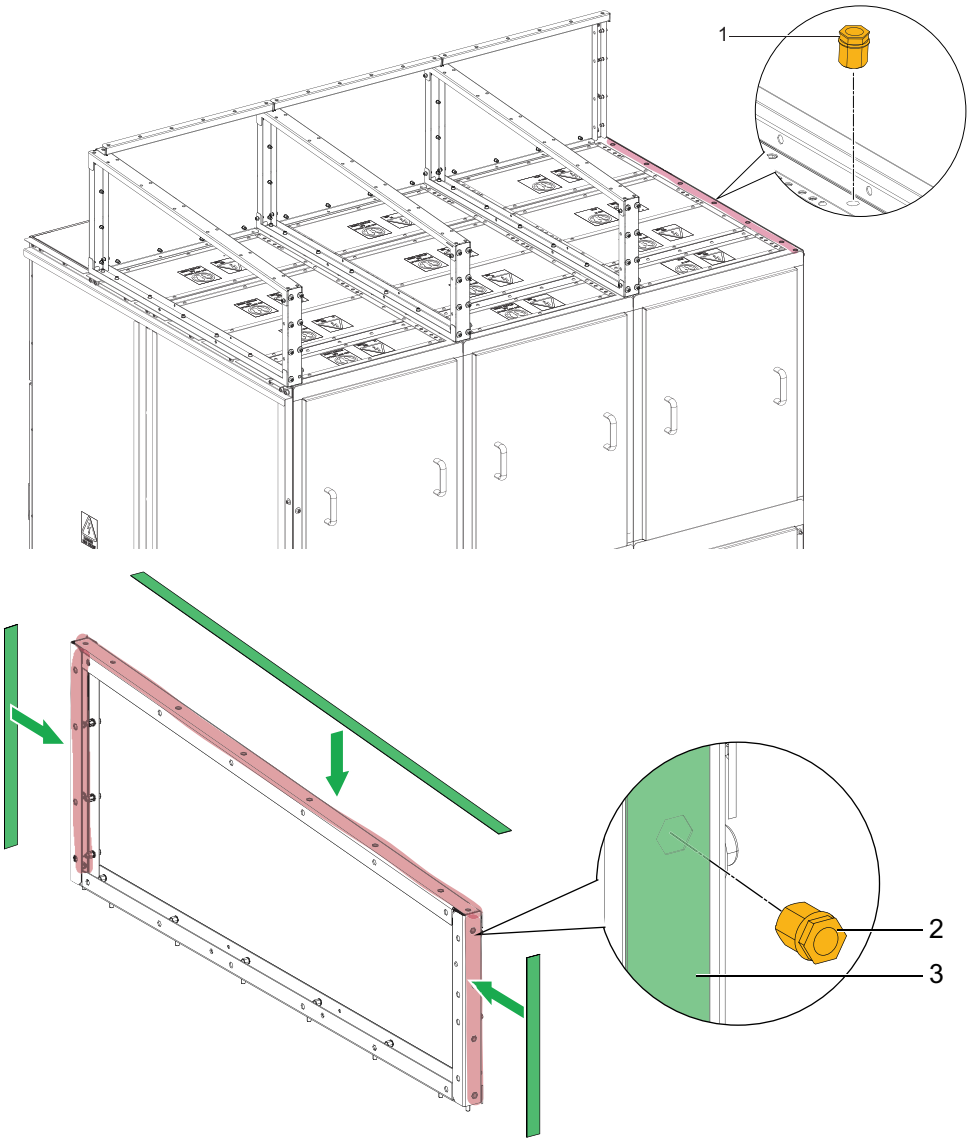

Figure 104
Installation of the End Frame (Sheet 1 of 2)

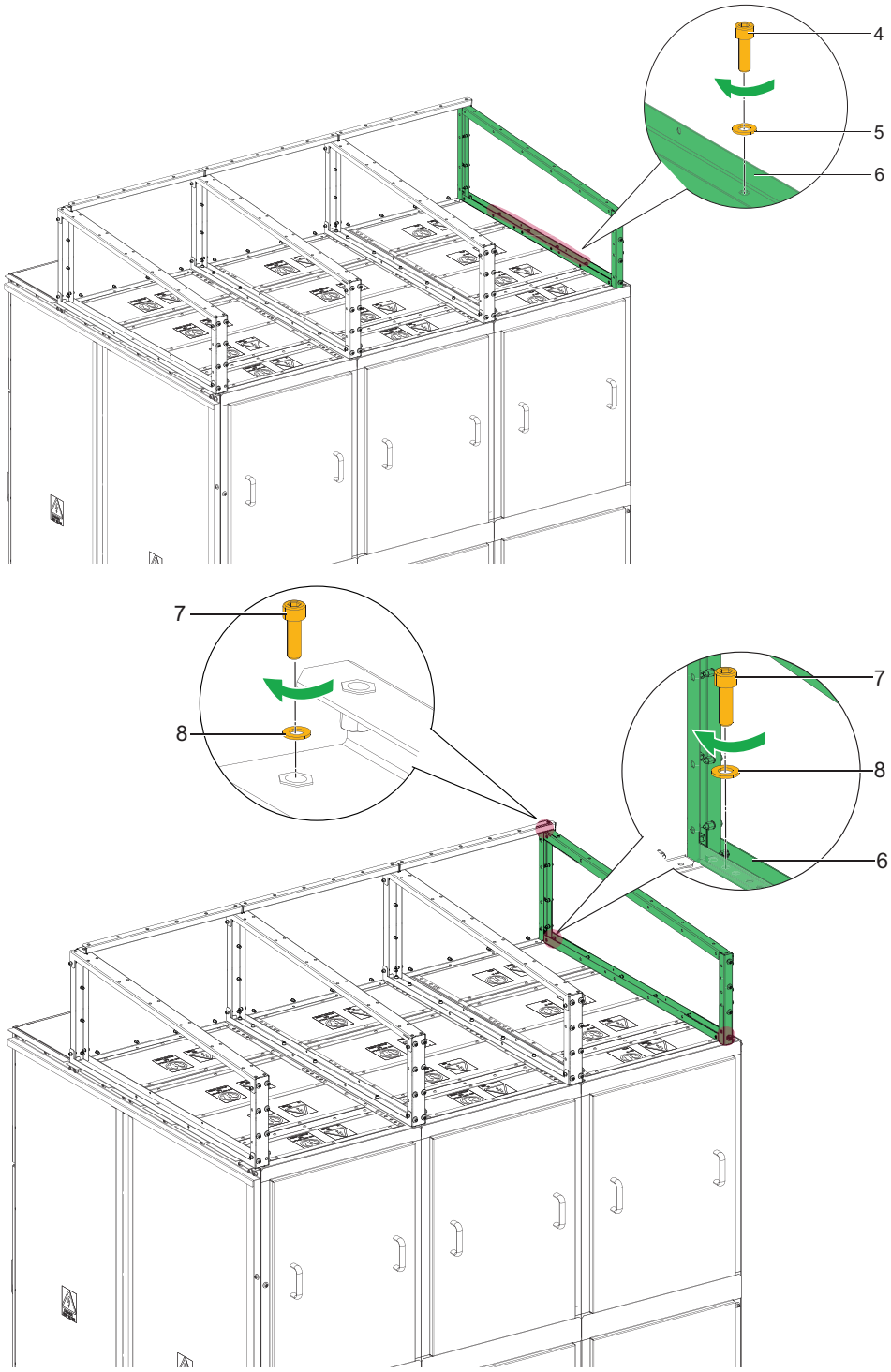

Figure 104
Installation of the End Frame (Sheet 2 of 2)

1	Round rivet nut	5	Washer
2	Hexagonal rivet nut	6	End frame
3	Gasket	7	Bolt
4	Bolt	8	Washer

Step 5: **Assembly of Rear Cover**

Follow the below steps to assemble the rear cover (Figure 105):

1. Insert the hexagonal rivet nuts (2) to the bracket (1).
2. Attach the rear cover (3) to the rear side of the bracket (1), and install the bolts (5) along with washers (4).
3. Attach the rear cover assembly (6) to the support frames, and install the bolts (5) along with plastic washers (7), and washers (4).

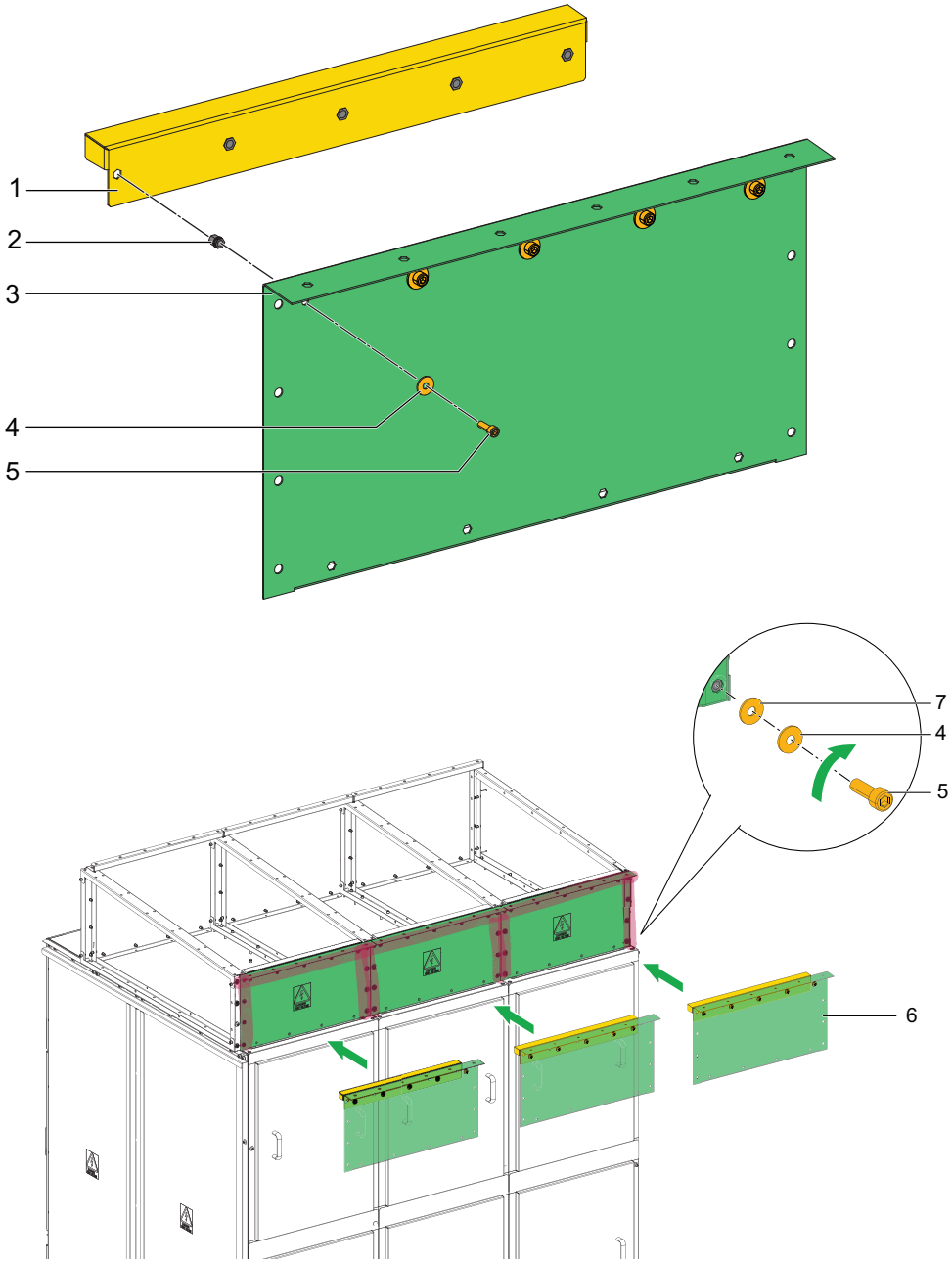

Figure 105
Installation of the Rear Cover

1	Bracket	5	Bolt
2	Hexagonal rivet nut	6	Rear cover assembly
3	Rear frame	7	Plastic washer
4	Washer		

Step 6: **Assembly of Top Cover**

Follow the below steps to assemble the top cover (Figure 106):

1. Attach the gaskets (3) to the top of front cover, rear cover, and frames.
2. Insert the rivet nuts (1) to the top of front cover, rear cover, and frames.
3. Attach the top covers (2) to the support frames and end frames, and install the bolts (4) along with plastic washers (6), and washers (5).
4. Attach the top covers (2) together, and install the bolts (4) along with washers (3), and hexagonal nuts (7).

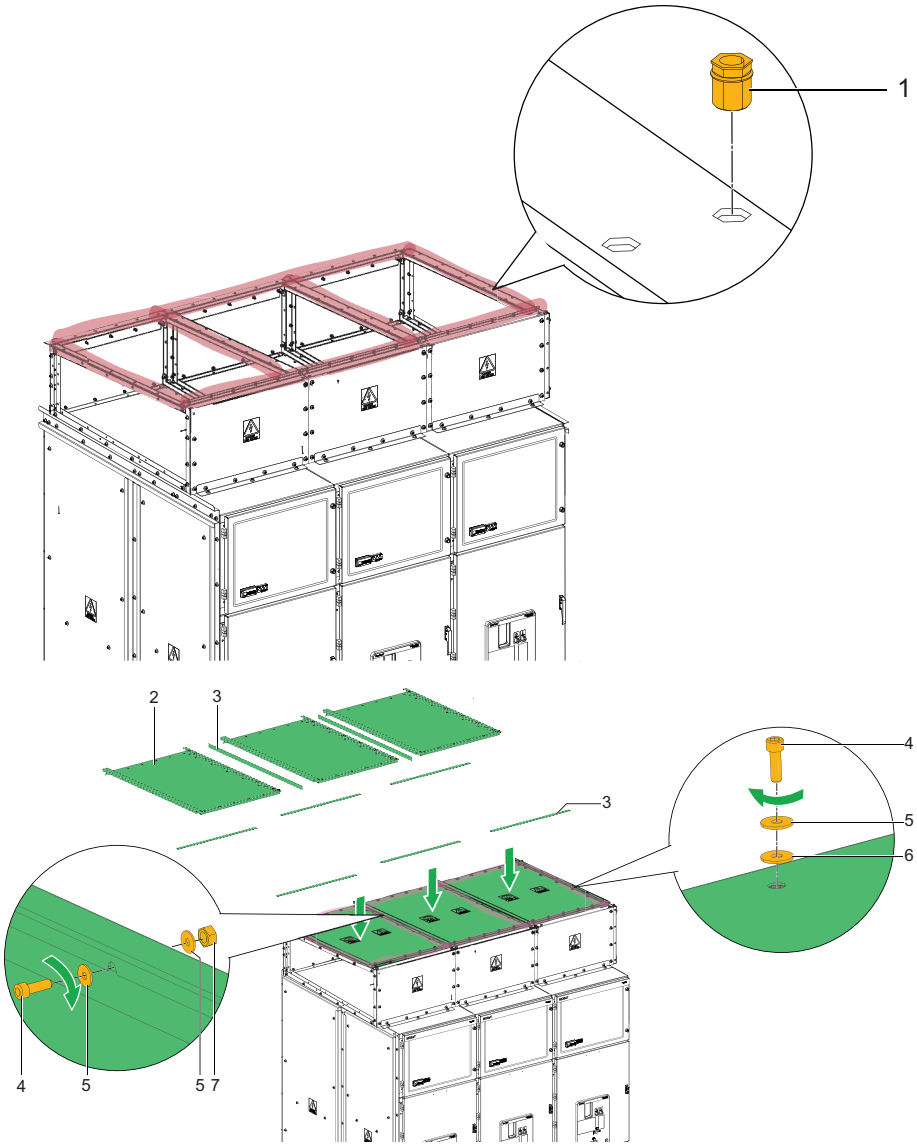

Figure 106
Installation of the Top Cover

1	Rivet nut	5	Washer
2	Top cover	6	Plastic washer
3	Gasket	7	Hexagonal nut
4	Bolt		

Step 7: **Assembly of End Cover:**

Follow the below steps to assemble the end cover (Figure 107):

1. Insert the rivet nuts (1) to the sides of left and right end frame.
2. Attach the gaskets (5) to the end frame.
3. Attach the end cover (4) to the end frame, rear cover, front cover, and top cover, and install the bolts (3) along with washers (2).

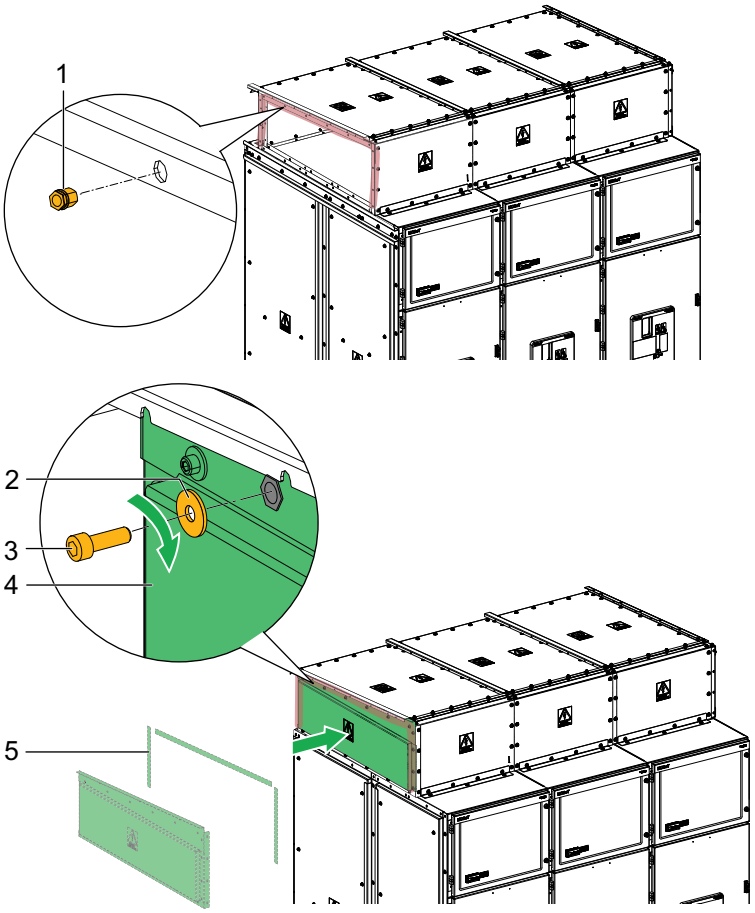

Figure 107
Installation of the End Cover

1	Rivet nut	4	End cover
2	Washer	5	Gasket
3	Bolt		

Step 8: **Assembly of Deflector Support:**

Follow the below steps to assemble the deflector support (Figure 108):

1. Attach the deflector support (1) to the front cover, and install the bolts (4) along with plastic washers (2), and washers (3).

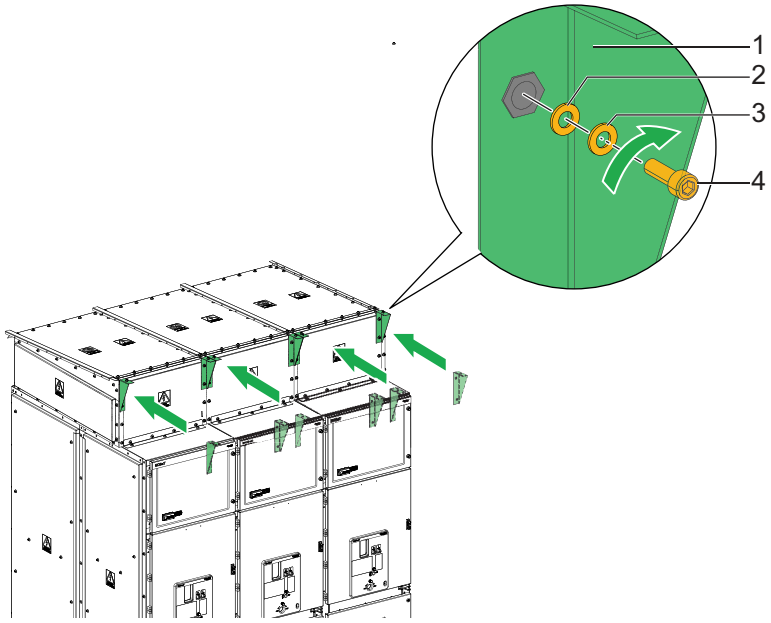

Figure 108
Installation of the Deflector Support

1	Deflector support	3	Washer
2	Plastic washer	4	Bolt

Step 9: **Assembly of Deflector:**

Follow the below step to assemble the deflector (Figure 109):

1. Attach the gaskets (1) in between the deflectors.
2. Attach the deflectors (5) to the top of front cover, and deflector support, and install the bolts (2) along with plastic washers (4), washers (3), and hexagonal nuts (6).

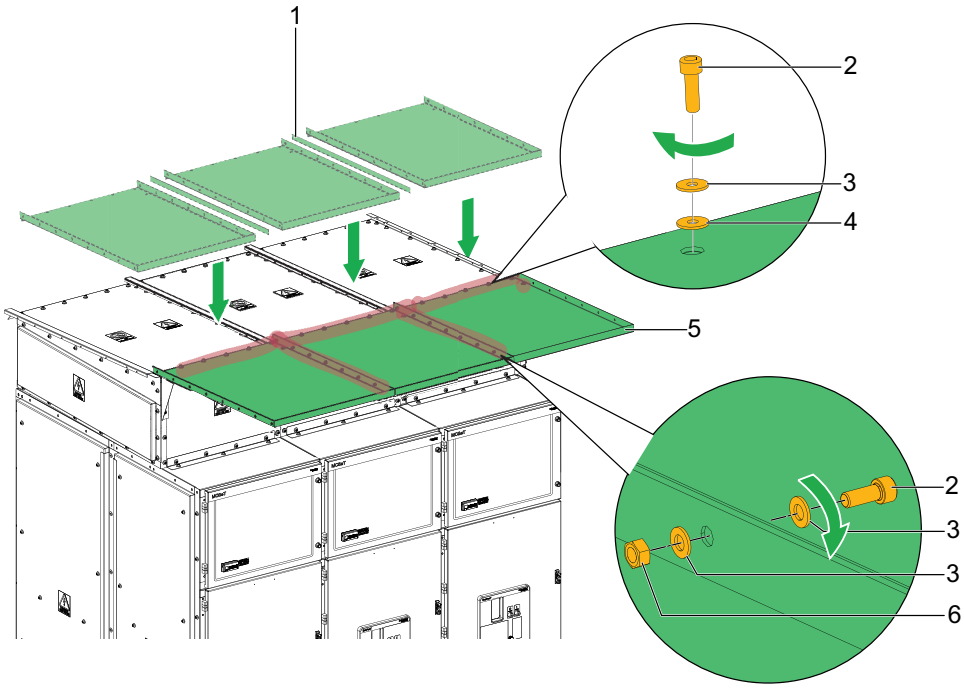

Figure 109
Installation of the Deflector

1	Gasket	4	Plastic washer
2	Bolt	5	Deflector
3	Washer	6	Hexagonal nut

Step 10: **Assembly of Extended Tunnel Assembly:**

Follow the below steps to assemble the extended tunnel assembly (Figure 110):

1. Attach the gaskets (5) to the support frame, and between the deflector.
2. Attach the extended tunnel assembly (6) to the support frame, rear cover, front cover, and top cover, and install the bolts (1) along with plastic washers (4), washers (2), and hexagonal nuts (3).

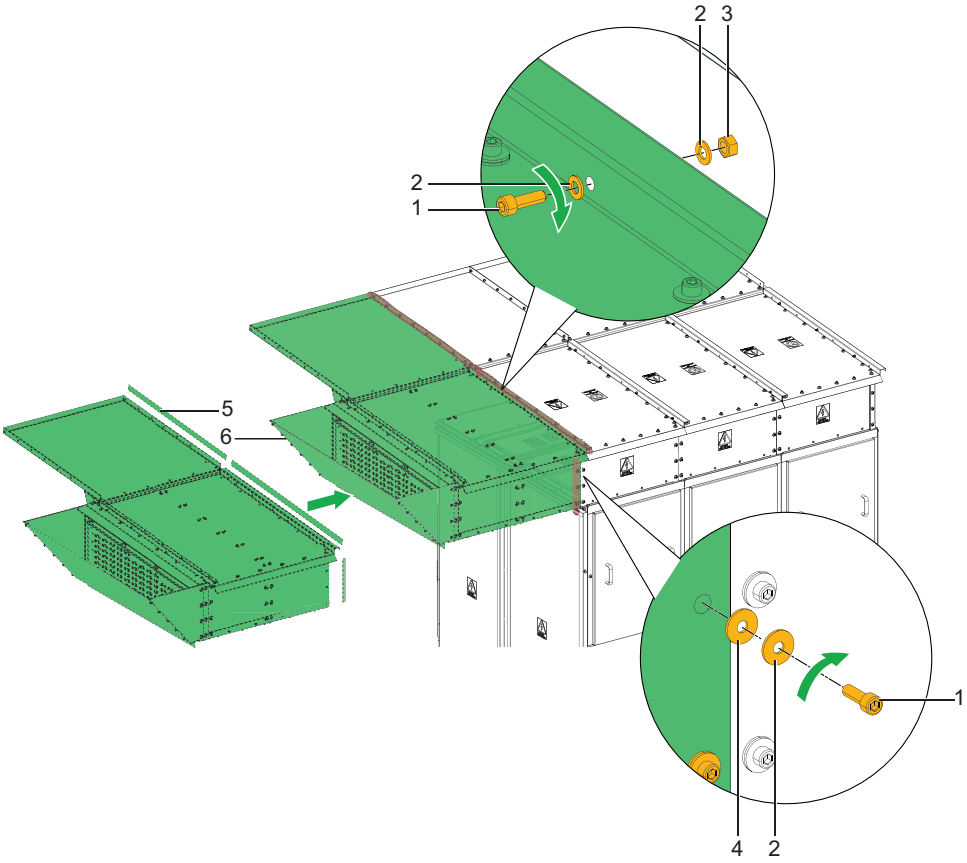

Figure 110
Installation of the Extended Tunnel Assembly

1	Bolt	4	Plastic washer
2	Washer	5	Gasket
3	Hexagonal nut	6	Extended tunnel assembly(1)

(1)An extended tunnel with a length of 1 m is available at Schneider Electric.

Installing the End Cover

⚠⚠DANGER

HAZARD OF ELECTRIC SHOCK, EXPLOSION, OR ARC FLASH

- Ensure that the end covers of busbar are assembled before mounting the switchgear end covers.
- If the switchgear is to be installed in the corner of a room, an appropriate end plate must be installed.

Failure to follow these instructions will result in death or serious injury.

Follow the below steps to install the end cover:

NOTE: Installation steps are identical for the right and left ends of the switchgear.

1. Install the busbar end cover (1) with rivet screw (2).
2. Install the front end cover (8) and rear end cover (3), and install the bolts (7) along with washers (6) (Figure 111). Apply the torque as per ST0171.
3. Install the center end wall coupler (4) and tunnel end wall coupler (5) with hardware.
4. Remove the cover plate from the knock-out (9) at the left end of the cubicle (Figure 111), and feed the earth bus rod into the knock-out hole (one per cubicle).

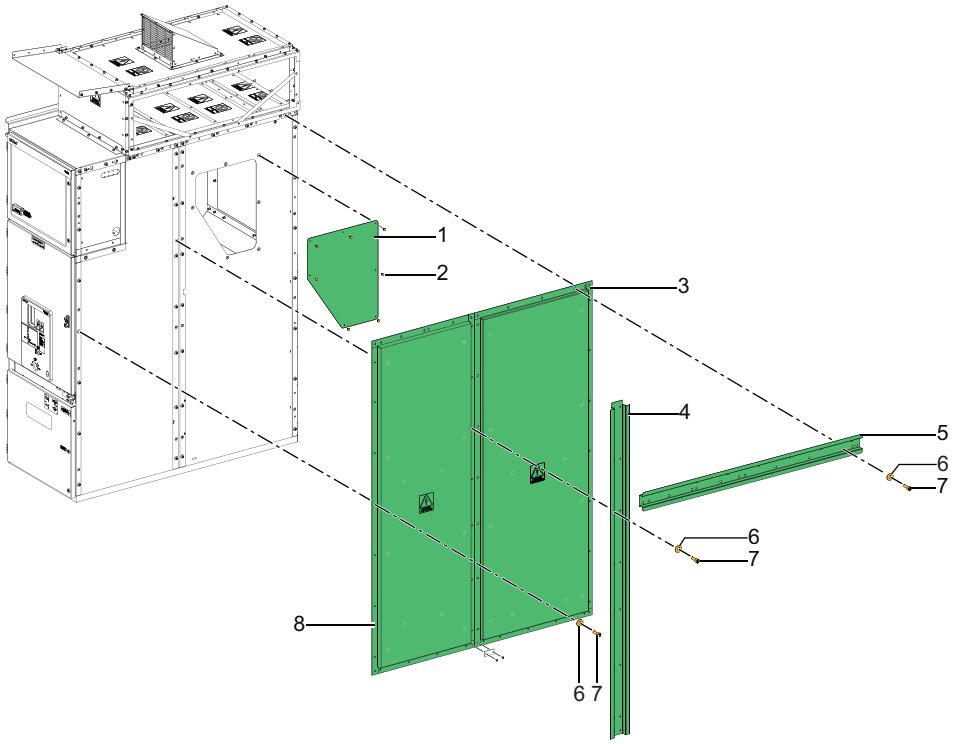

Figure 111
Installing the End Covers (Sheet 1 of 2)

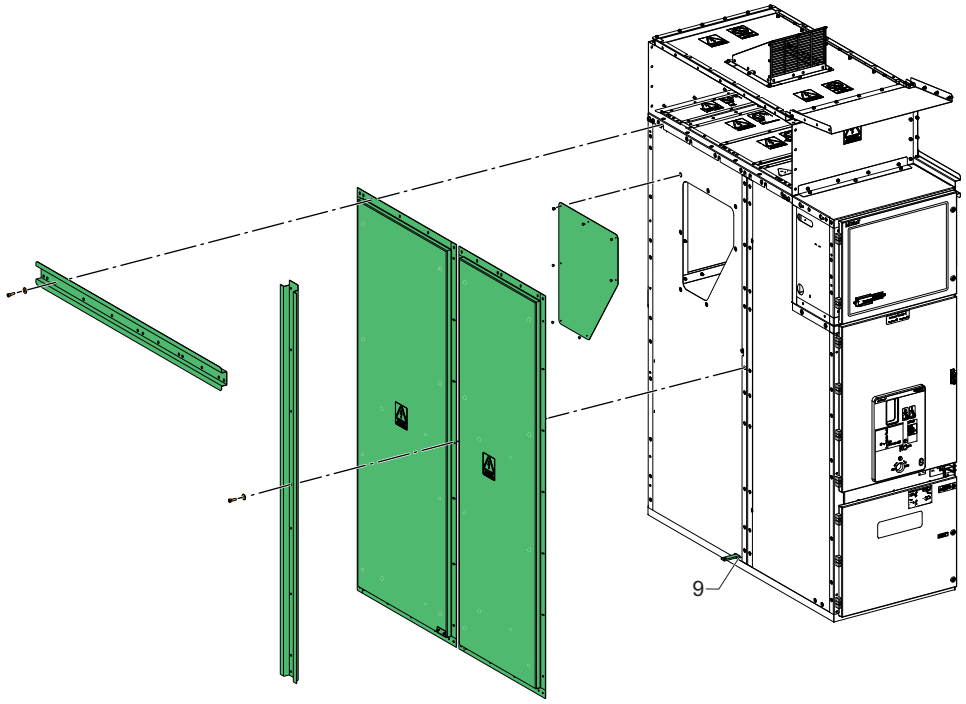

Figure 111
Installing the End Covers (Sheet 2 of 2)

1	Busbar end cover	6	Washer M8
2	Rivet screw	7	Screw M8 x 25
3	Rear end cover	8	Front end cover
4	Center end wall coupler	9	Knock-out
5	Tunnel end wall coupler		

Installation of Top Busbar Entry End Cover

Follow the below steps to install the top busbar entry end cover:

1. Install the busbar end cover (1) with rivet screw (2).
2. Install the front end cover (7), and rear end cover (8), and install the bolts (4) along with washers (3) (Figure 112). Apply the torque as per ST0171.
3. Install the center end wall coupler (5), and tunnel end wall coupler (6), and install the bolts (4) along with washers (3).
4. Remove the cover plate from the knock-out (9) at the left end of the cubicle (Figure 112), and feed the earth bus rod into the knock-out hole.(one per cubicle).

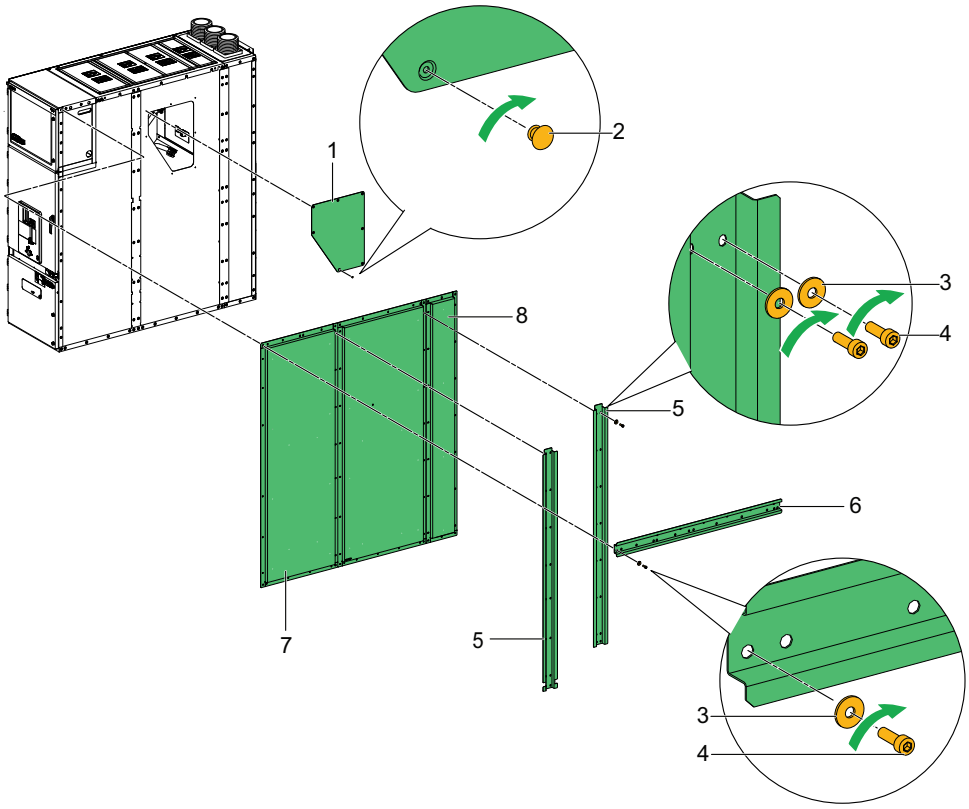

Figure 112
Installation of Top Busbar Entry End Cover (Sheet 1 of 2)

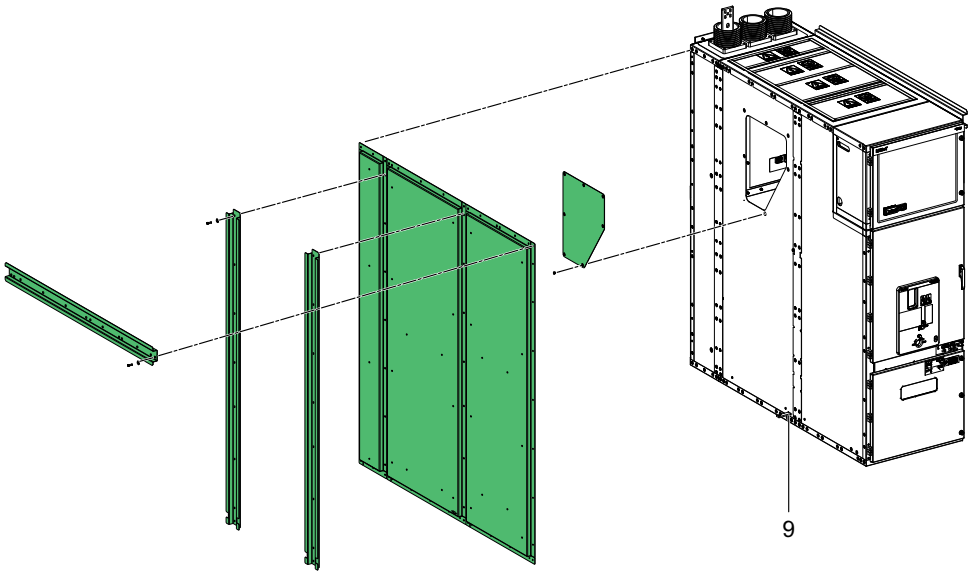

Figure 112
Installation of Top Busbar Entry End Cover (Sheet 2 of 2)

1	Busbar end cover	6	Tunnel end wall coupler
2	Rivet screw	7	Front end cover
3	Washer M8	8	Rear end cover
4	Screw M8 x 25	9	Knock-out
5	Center end wall coupler		

Installing the Rear Cover

NOTICE
HAZARD OF INCORRECT INSTALLATION Rear access must only be accessed with AFLR internal arc classification. **Failure to follow these instructions can result in equipment damage.**

Follow the below step to install the rear end covers of 12/17.5 kV cubicle (Figure 113):

1. Install the rear cover (1), and install the bolts (3) along with washers (2).

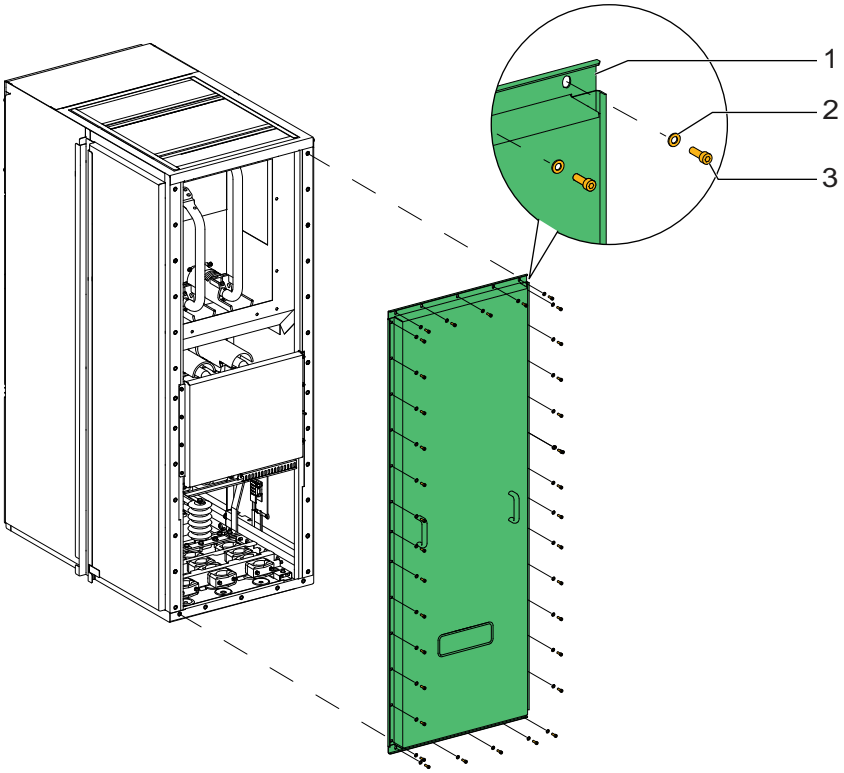

Figure 113
Installing the Rear Covers 12/17.5 kV

1	Rear cover
2	Washer M8
3	Screw M8 x 25

Follow the below steps to install the rear end covers of 24 kV, 1250 A cubicle (Figure 114):

1. Install the center end wall coupler (1), and install the screws (3) along with washers (2).
2. Install the top rear cover (5) and tunnel end wall coupler (6), and install the bolts (8) along with washers (7).
3. Install the bottom rear cover (4), and install the bolts (8) along with washers (7).

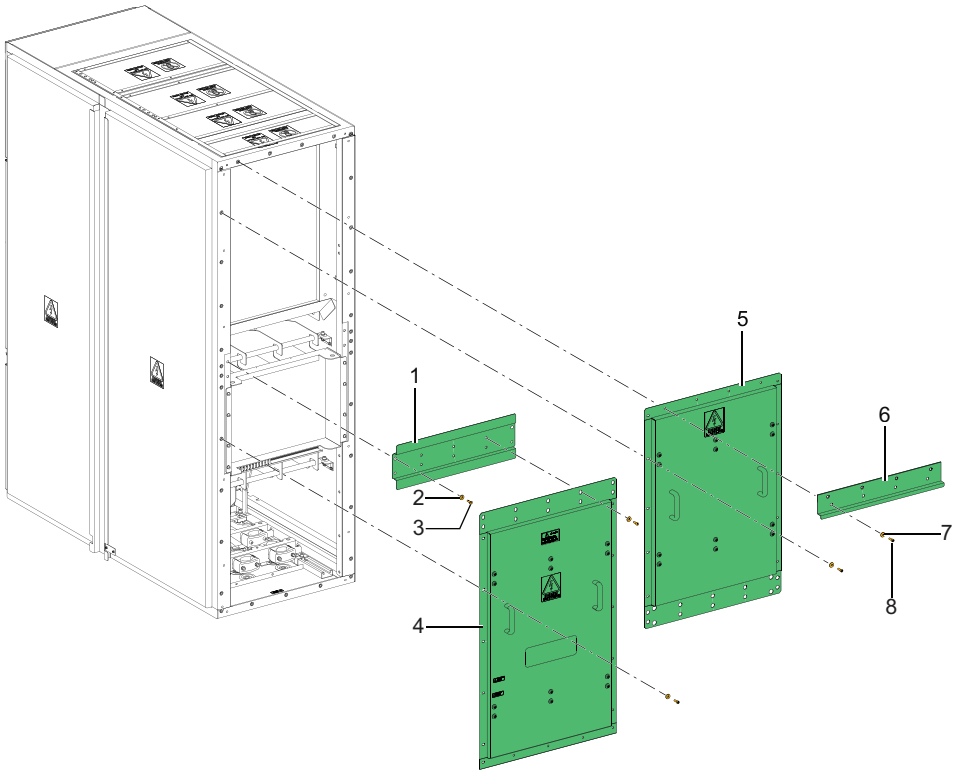

Figure 114
Installing the Rear Covers 24 kV (1250 A)

1	Center end wall coupler	5	Top rear cover
2	Washer	6	Tunnel end wall coupler
3	Screw	7	Washer M8
4	Bottom rear cover	8	Bolt M8 x 25

Follow the below steps to install the rear end covers of 24 kV, 2500 A cubicle (Figure 115):

1. Install the center end wall coupler (1), and install the screws (4) along with washers (3).
2. Install the top rear cover (5) and tunnel end wall coupler (6), and install the bolts (8) along with the washers (7).
3. Attach the screen (9) and deflector (10) to the bottom rear cover (2) with attaching hardware.
4. Install the bottom rear cover (2) to the cubicle, and install the bolts (8) along with washers (7).

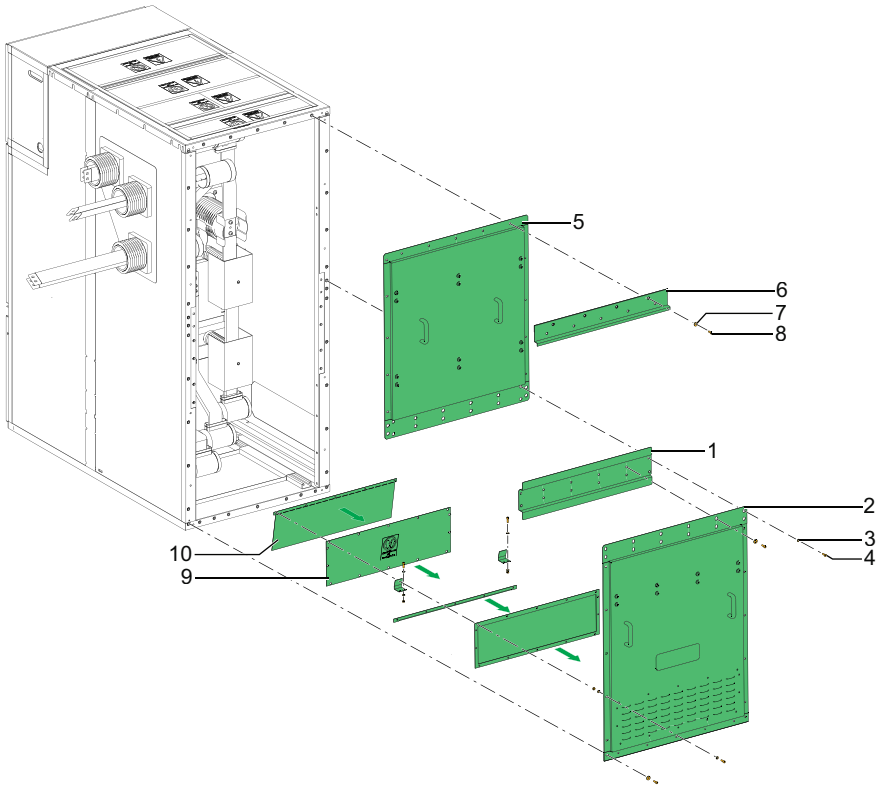

Figure 115
Installing the Rear Covers 24 kV (2500 A)

1	Center end wall coupler	6	Tunnel end wall coupler
2	Bottom rear cover	7	Washer M8
3	Washer	8	Bolt M8 x 25
4	Screw	9	Screen
5	Top rear cover	10	Deflector

Pre-Commissioning Checklist for MCSeT Switchgear

⚠WARNING

HAZARD OF INAPPROPRIATE PRE-COMMISSIONING CHECKS

Before charging the cubicles, ensure that the pre-commissioning checks are performed.

Failure to follow these instructions can result in death, serious injury, or equipment damage.

Table 17 Pre-Commissioning Checklist

Checklist	Information
Verification of installation	Alignment, Accessories used as guided in documents, Cubicle placement as per approved GA drawings, Castel-key interlock verification as applicable, Check the rating of the components and equipment, Check external earthing & continuity for all cubicles, Ensuring the identification of cubicles are same on front and rear side, and Check documentation of applied torque on bus bars & other applicable joints.
Control bus and intern cubicle connectivity	Ensure inter-cubicle connections are taken care.
Mechanical operational test	Know your switchgear before performing any operational/interlock test. Study the applicable scheme and its requirements for this project. Conduct several racking/rack out and open/close operations for EvoPacT HVX VCB, switches, and earth switches as applicable. Record operational counter details if applicable before and after the completion of the operational test.
Contact Resistance Test for main bus bars	Apply final torque to identification before starting activities.
Functional Test/Scheme check of the cubicle as per approved schematic diagram	Familiarize yourself with the applicable scheme and its requirements.
Current Transformers and Voltage Transformers testing as applicable	Test applicable components and normalize all links.
Secondary injection testing of protection relays as applicable	Ensure proper functionality of the tripping scheme. Perform secondary injection with approved protection setting. Any deviation must be documented, and the end-user must be notified officially if the final relay setting is not available.
Insulation Resistance Test on the power circuit	Remove VT from the circuit. Remove surge arresters from the circuit.
HIPOT/Power frequency withstand voltage test on a power circuit	Remove VT from the circuit. Remove surge arresters from the circuit. Short-circuit CT secondary and ground CT links. Conduct a HIPOT/Power frequency withstand voltage test at 80% of factory Voltage for one minute.
Check of IP / sealing methods	Prior to closing the front and rear cable doors (covers), it is essential to inspect the IP for cable entry, including checks at front doors such as cable door arrangements, MV doors, and LV compartment doors. It's also important to verify the IP from the cable door or back side covers. Checking IP is crucial for structural enclosure. Additionally, the IP for the top cover needs to be guaranteed, and any unused openings on the sides, top, and bottom of the cubicle should be sealed off to help ensure IP and safe cubicle functioning.

Table 17 Pre-Commissioning Checklist (Continued)

Checklist	Information
Primary injection test on current transformer and voltage transformer	It is crucial to conduct this test to identify any errors in the CT and VT circuits. Standardize all the shorting links that were adjusted during the Insulation test and HIPOT/Power frequency withstand voltage test. Verify that all relays and relevant measuring devices display the appropriate readings. Once the testing is completed, make sure all the links are returned to their normal state. For instance, the VT circuit should not be short-circuited, while the unused core of the CT must be short-circuited.
Remove temporarily created conditions	Always remember/mark temporarily created conditions to carry out the operation. (Keys/Solenoid/upstream interlocks/process control feedback etc.)

Inspection and Test

Power Frequency Dielectric Test (Optional)

Follow the below steps for power frequency dielectric test.

1. Rack-in and close all the VCB with functional unit doors open.
2. Disconnect all the VTs and surge arresters during the test.
3. Open lower cubicle of one functional unit feeder to connect the test cable.
4. The test voltage shall be 80% of the rated short-duration power-frequency withstand voltage of the switchgear as specified in clause 7.105 of IEC 62271-200.

   NOTE:

   - The power frequency dielectric test can be carried out in one single operation.
   - The insulation level of the switchgear can be tested on site.
   - This procedure requires to defeat the interlocks.
   - It is essential to follow the power frequency test sequences.

Cable Test after Assembly (Optional)

⚠WARNING

HAZARD OF INCORRECT OPERATION

Comply with the Safety Provisions, page 10.

Failure to follow these instructions can result in death, serious injury, or equipment damage.

A test unit and a test adapter (not included in scope of supply) are required for cable testing.

NOTE: The assembly, operating and testing instructions for cable fittings and connectors and the test unit must be taken into consideration.

During the cable test, the busbar can be operated at rated voltage (see Rating Plate, page 25). For qualification of the current transformers for cable tests, enquire at the appropriate manufacture.

Preparation

⚠WARNING

HAZARD OF INCORRECT OPERATION

Ensure the assembly instructions for the test adapters and the operating and inspection instructions for the test unit.

Failure to follow these instructions can result in death, serious injury, or equipment damage.

1. Isolate I/F cable of the cubicle to be tested.
2. Isolate I/F cable in remote station.
3. Earth I/F cable of the cubicle to be tested.

4. Remove cable compartment cover. Refer to *Access to the Cable Compartment, User Guide* (BQT6904800).
5. Disconnect VT and surge arrester.

Performing the Cable Test

⚠⚠DANGER

HAZARD OF ELECTRIC SHOCK, EXPLOSION OR ARC FLASH

- Ensure the test process & procedure as per latest IEC 62271-200.
- Apply appropriate PPE and follow safe work practices.
- This equipment must only be tested by qualified personnel.
- Make sure that the metallic components of the test adapter are at a sufficient distance from the earthed switchgear components (for example, housing).

Failure to follow these instructions will result in death or serious injury.

NOTE: Make sure that the metallic components of the test adapter are at a sufficient distance from the earthed switchgear components (for example, housing).

1. Connect the test adapter to a free cable connection in the cubicle and on the test unit. To this effect, observe the specifications of the test unit's manufacturer.
2. Set switchgear cubicle to test position:

Table 18 Performing the Cable Test

Component	Test position
VCB	OFF
Trolley	In disconnected position
Earthing switch	OFF

NOTE: While performing cable test, comply with the admissible limits (see Table 19).

3. Perform cable test according to the cable manufacturer's specifications.

Reposition the cable connection in the cable compartment:

1. Earth I/F cable again.
2. Remove test set.
3. Reconnect VT and surge arrester or de-earth them.
4. Reposition cable compartment cover.

Admissible Limits for the Cable Test in Cubicles

Table 19 Admissible Limits for the Cable

	DC test voltage [kV] max. 15 min.	AC – VLF test voltage (0.1 Hz) 60 min.
MCSeT (Ur = 24 kV)	48 kV(1)(2)	36 kV(1)(2)
	72 kV(3)	54 kV(3)

(1) Category A: This category comprises those systems in which any phase conductor that comes in contact with earth or an earth conductor is disconnected from the system within 1 min.

(2) Category B: This category comprises those systems which under fault conditions are operated for a short time with one phase earthed. This period according to IEC 60183, should not exceed 1 h. For cables covered by this standard, a longer period not exceeding 8 h on any occasion can be tolerated. The total duration of earth faults in any year should not exceed 125 h.

(3) Category C: This category comprises all systems which do not fall into category A or B.

NOTE: A DC test may endanger the insulation system under test. Where possible an AC test should be used as described above.

Glossary

A

AFL: Accessibility Front Lateral

AFLR: Accessibility Front Lateral Rear

B

BME: Busbar Metering and Earthing

BSC: Bus Section Coupler

BSR: Bus Section Riser

C

CT: Current Transformer

E

E/S: Earth Switch

EvoPacT HVX: Vacuum Circuit Breaker

EvoPacT MTX: Metering Truck

F

F: Feeder

I

I/F: Incomer/Feeder

L

LV: Low Voltage

M

MV: Medium Voltage (voltage class up to 24 kV)

V

VCB: Vacuum Circuit Breaker

VT: Voltage Transformer

Schneider Electric
35 rue Joseph Monier
92500 Rueil Malmaison
France

+ 33 (0) 1 41 29 70 00

www.se.com

As standards, specifications, and design change from time to time, please ask for confirmation of the information given in this publication.

© 2026 – Schneider Electric. All rights reserved.

BQT6904400-04