AirSeT Series

Ringmaster AirSeT

Secondary Gas Insulated Switchgear
Up to 12 kV
Indoor/Outdoor Switchgear

Installation, Operation, and Maintenance Manual

BRU9950900-00
10/2025



Schneider Electric

www.se.com

Legal Information

The information provided in this document contains general descriptions, technical characteristics and/or recommendations related to products/solutions.

This document is not intended as a substitute for a detailed study or operational and site-specific development or schematic plan. It is not to be used for determining suitability or reliability of the products/solutions for specific user applications. It is the duty of any such user to perform or have any professional expert of its choice (integrator, specifier or the like) perform the appropriate and comprehensive risk analysis, evaluation and testing of the products/solutions with respect to the relevant specific application or use thereof.

The Schneider Electric brand and any trademarks of Schneider Electric SE and its subsidiaries referred to in this document are the property of Schneider Electric SE or its subsidiaries. All other brands may be trademarks of their respective owner.

This document and its content are protected under applicable copyright laws and provided for informative use only. No part of this document may be reproduced or transmitted in any form or by any means (electronic, mechanical, photocopying, recording, or otherwise), for any purpose, without the prior written permission of Schneider Electric.

Schneider Electric does not grant any right or license for commercial use of the document or its content, except for a non-exclusive and personal license to consult it on an "as is" basis.

Schneider Electric reserves the right to make changes or updates with respect to or in the content of this document or the format thereof, at any time without notice.

To the extent permitted by applicable law, no responsibility or liability is assumed by Schneider Electric and its subsidiaries for any errors or omissions in the informational content of this document, as well as any non-intended use or misuse of the content thereof.

SeT Series

Featuring outstanding medium-voltage (MV) and low-voltage (LV) switchboards, motor control centres and power distribution solutions for high-performance power applications, Schneider Electric's SeT Series is optimized solutions based on high levels of safety and an optimized footprint. Built on a modular architecture and incorporating smart connected devices for maximum safety, reliability, performance and energy efficiency, the SeT Series is delivered to customers directly from our Schneider Electric plants or via a global network of licensed partner panel builders, who are trained and audited to provide quality equipment and support.

Table of Contents

Safety Information 5
Safety Precautions 6
About the Document 7
Safety Provisions 9
General 12
Disposal After the End of the Useful Life 12
Design and Description 13
General Characteristics 13
Configurations 13
Identification 15
Rating Plate 16
Dimensions and Weight 16
Interlocks 17
Mechanical Interlocks 17
Interlocks for VCB and Disconnector 17
Interlocks for Integrated Cable Test Facility of RS1 and RS2 18
Padlocks 19
Handling Instructions 20
Packaging 21
Transport 22
Delivery 23
Paintwork 24
Unpacking 24
Storage 25
Accessories 27
Protection Systems 28
Operation of TLF 30
Protection Relays 32
VIP 400/410 32
VIP 45 36
Handling Instructions of VIP Relays 38
Civil Engineering 40
Floor Preparation Test 40
Cable Trench 41
Sizing of the Civil Engineering for Network Switch 42
Depth of Trench 43
Sizing of the Civil Engineering for Ringmaster AirSeT 44
Internal Arc Installation Condition 45
Installation 48
Installation Altitude 48
Mission Profile 49
Connection of MV Cables 49
Instructions for Connecting MV Cables 50
Different Types of Bushings 52
Earthing of the Cables 53
Connection of Single Core Cables 54

Internal Arc Diverter Plate....61
Transformer Mounting....62
Commissioning....64
Safety Precautions....64
Checks and Tests....65
Pressure Check....65
Physical Checks....66
Energizing the Medium Voltage Cables....67
Functional Checks....67
High Voltage Withstand Test....68
Voltage Presence....69
Operation....74
Essential Checks....75
Opening and Closing the Ringmaster AirSeT Main Door....76
Door Stopper....76
Operating Handle....77
Circuit Breaker Mechanism....78
Switch/Disconnector Mechanism....79
Manual Spring Charging of VCB....82
Motorized Operation of Ring Switch....83
Manual Operation of Motorized Ring Switch....85
Mechanical Interlocks....88
Ring Switch Earth Interlock....88
RS1 Switch Mechanism – OFF to Earth ON and Earth ON to OFF....89
SCT Operation Instruction – RS1....91
SCT Operation Instruction – RS2....95
Circuit Breaker Auxiliary Tests....99
CT Ratio Test....100
CT Polarity Test....102
CT Spill Test....104
TLF/DAT Overcurrent Tests - Primary Current Injection....105
TLF/DAT Earth Fault Tests - Primary Current Injection....107
TLF/DAT Overcurrent Tests - Secondary Current Injection....109
TLF/DAT Earth Fault Tests - Secondary Current Injection....111
Integrated Cable Test Facility....113
Discharging the Cables to the Earth....115
Connecting the Integrated Cable Test Facility....116
Maintenance....118
Recommendations and Conditions....118
Housing....119
Circuit Breaker....120
General Arrangement Drawings....121
Glossary....125

Safety Information

Important Information

Read these instructions carefully, and look at the equipment to become familiar with the device before trying to install, operate, service, or maintain it. The following special messages may appear throughout this documentation or on the equipment to warn of potential hazards or to call attention to information that clarifies or simplifies a procedure.



The addition of this symbol to a “Danger” or “Warning” safety label indicates that an electrical hazard exists which will result in personal injury if the instructions are not followed.



This is the safety alert symbol. It is used to alert you to potential personal injury hazards. Obey all safety messages that follow this symbol to avoid possible injury or death.

⚠ DANGER

DANGER indicates a hazardous situation which, if not avoided, **will result in** death or serious injury.

⚠ WARNING

WARNING indicates a hazardous situation which, if not avoided, **could result in** death or serious injury.

⚠ CAUTION

CAUTION indicates a hazardous situation which, if not avoided, **could result** in minor or moderate injury.

NOTICE

NOTICE is used to address practices not related to physical injury.

Please Note

Electrical equipment should be installed, operated, serviced, and maintained only by qualified personnel. No responsibility is assumed by Schneider Electric for any consequences arising out of the use of this material.

A qualified person is one who has skills and knowledge related to the construction and operation of electrical equipment and its installation, and has received safety training to recognize and avoid the hazards involved.

Safety Precautions

Safety Rules

⚠⚠DANGER

HAZARD OF ELECTRIC SHOCK, EXPLOSION, OR ARC FLASH

- Apply appropriate Personal Protective Equipment (PPE) and follow safe electrical work practices.
- This Ringmaster AirSeT equipment must only be installed and serviced by qualified electrical personnel.
- Perform work only after reading and understanding all of the instructions contained in this guide.
- Turn off all the power supplies of the equipment before working on or inside the equipment.
- Respect the LOTO (Lock Out Tag Out) procedure.
- Always use a properly calibrated voltage sensing device to confirm power is off.
- Put all devices, doors, and covers back into place before turning on power to this equipment.
- Beware of potential hazards, and carefully inspect the work area for tools and objects that may have been left inside the equipment.
- Depending on the internal arc classification, it is recommended to not access the rear or sides of the switchgears when it is energized.
- Do not modify the mechanical or electrical parts.
- Do not bypass the interlocks before operation.

Failure to follow these instructions will result in death or serious injury.

NOTICE

HAZARD OF INAPPROPRIATE HANDLING AND STORAGE

- Comply with the handling rules and avoid causing any shocks to the device.
- If the equipment is stored before its final installation, observe the storage conditions.

Failure to follow these instructions can result in equipment damage.

Cleaning Instructions

⚠⚠DANGER

HAZARD OF ELECTRIC SHOCK, EXPLOSION, OR ARC FLASH

- Do not use solvents or alcohol for cleaning the equipment.
- Do not use high-pressure cleaner for cleaning the equipment.

Failure to follow these instructions will result in death or serious injury.

About the Document

Intended Use

The scope of this manual is to provide the users with all instructions concerning handling, storage, installation, operation, and maintenance of the Ringmaster AirSeT equipment.

The Ringmaster AirSeT range comprises of Ringmaster AirSeT (Type C bushing) 200 A, non-extensible compact Ring Main Unit (RMU).

This guide is meant for a qualified person who will operate, install, and maintain the Ringmaster AirSeT range of equipment:

- When fully installed, the equipment is suitable for outdoor use. It is necessary to help protect the equipment from the environment during erection/ commissioning.
- Check the equipment specification for clarification of indoor/outdoor use.
- When the busbar chamber or cable box become exposed to the elements, they must be thoroughly cleaned prior to energizing.

All dimensions not specified in detail are in millimeters.

Validity Note

This guide is valid only for Ringmaster AirSeT RMU. It is designed to performances up to 12 kV/21 kA/200 A.

The information contained in this guide is likely to be updated at any time. Schneider Electric strongly recommends that you have the most recent and up-to-date version available on www.se.com/ww/en/download.

The technical characteristics of the devices described in this guide also appear online. To access the information online, go to the Schneider Electric home page at www.se.com/ww/en/download.

General Cybersecurity Information

In recent years, the growing number of networked machines and production plants has seen a corresponding increase in the potential for cyber threats, such as unauthorized access, data breaches, and operational disruptions. You must, therefore, consider all possible cybersecurity measures to help protect assets and systems against such threats.

To help keep your Schneider Electric products secure and protected, it is in your best interest to implement the cybersecurity best practices as described in the Cybersecurity Best Practices document.

Schneider Electric provides additional information and assistance:

- Subscribe to the Schneider Electric security newsletter.
- Visit the Cybersecurity Support Portal web page to:
  - Find Security Notifications.
  - Report vulnerabilities and incidents.
- Visit the Schneider Electric Cybersecurity and Data Protection Posture web page to:
  - Access the cybersecurity posture.
  - Learn more about cybersecurity in the cybersecurity academy.
  - Explore the cybersecurity services from Schneider Electric.

Related Documents

Title of Documentation	Reference Number
Ringmaster AirSeT catalog	998-23653257
VIP 400/410 User manual	NRJED311206EN
VIP 45 User manual	NRJED311207EN
Voltage presence indicating system for Medium Voltage (MV) switchgear	ENMED309037EN
Voltage Detecting and Indicating System (VDIS)	VDIS006STD/VDIS007STD
T300 User manual	NT00378-EN-12
End-of-Life	ENVEOLI2505026.

Information on Non-Inclusive or Insensitive Terminology

As a responsible, inclusive company, Schneider Electric is constantly updating its communications and products that contain non-inclusive or insensitive terminology. However, despite these efforts, our content may still contain terms that are deemed inappropriate by some customers.

Trademarks

QR Code is a registered trademark of DENSO WAVE INCORPORATED in Japan and other countries.

Safety Provisions

Introduction

Before performing work on the unit, it is essential that you comply with the following instructions:

⚠⚠DANGER

HAZARD OF ELECTRIC SHOCK, EXPLOSION, OR ARC FLASH

Before removing covers and performing assembly or maintenance work:

- Ensure that the system is isolated from high voltage, supply voltage, and properly grounded.
- Ensure that the Vacuum Circuit Breaker (VCB) is in OFF/OPEN condition, the Earthing Switch (E/S) is closed, and access is locked.
- Follow the LOTO process to perform any work on switchboard.
- Install barriers, and cables in accordance with the design specifications wherever necessary.

Failure to follow these instructions will result in death or serious injury.

⚠WARNING

HAZARD OF MOVABLE PARTS IN MECHANICAL DRIVES

Before performing mounting and maintenance work, comply with the below safety rules:

- Isolate from the supply voltage.
- Release the energy-storing device of the VCB by performing the OFF-ON-OFF operation.
- Activate the make-proof E/S to ON position, to ensure that the equipment is ready for use (if any).
- Do not remove the mechanisms during maintenance work.

Failure to follow these instructions can result in death, serious injury, or equipment damage.

⚠WARNING

HAZARD OF SHARP-EDGED SHEET METAL AND METAL PARTS

During installation and maintenance work, comply with the below safety rules:

- Apply appropriate PPE and follow safe electrical work practices. See standards or local equivalent.
- Always cover sharp edges.

Failure to follow these instructions can result in death, serious injury, or equipment damage.

Applicable Standards and Regulations

The applicable standards and regulations are as follows:

Table 1 - Applicable Standards and Regulations

Description	IEC standard
Switchboard	IEC 62271-200 IEC 62271-1
Behavior in the event of internal faults	IEC 62271-200
Earthing switch	IEC 62271-102
Ring switch	IEC 62271-103
Circuit breaker	IEC 62271-100
Current transformer	IEC 61869-2
Voltage transformer	IEC 61869-3
Voltage presence indication system	IEC 62271-206
Voltage detection and indication system	IEC 62271-213
Protection against accidental contacts, foreign bodies and ingress of water	IEC 60529
Basic and safety principles for man-machine interface, marking and identification	IEC 60445
Ground mounted distribution substation RMU and Extensible switchgear (Rated 12–24 kV)	ENA TS_41-41_301197

NOTE:

- Comply with the national standards applicable in the country where the equipment is to be installed.
- Other standards or regulations have to be checked and accessed locally.

Environmental and Operating Conditions

The operating conditions for the installation of standard Ringmaster AirSeT unit to meet the normal service conditions are as defined by IEC 62271-1, clause 4.1.3. Refer to the below Table – Environmental Specifications, page 10.

Table 2 - Environmental Specifications

Environmental Specifications	Values
Ambient Air Temperature	• ≥ -25 °C to ≤ +45 °C • ≤ +35 °C on average over 24 hours
Surface Temperature	≤ +60 °C
Altitude	≤ 1000 m above sea level(1)
Solar Radiation	≤ 1000 W/m^2
Ambient Air Pollution	Site Pollution Severity (SPS) class medium as defined by IEC TS 60815-1: 2008
Ice Coating	≤ 20 mm
Wind Speed	≤ 34 m/s
Absolute Humidity	Relative humidity can reach 100% when absolute humidity is 30 g/m^3, leading to possible precipitation or condensation.

Table 2 - Environmental Specifications (Continued)

Environmental Specifications	Values
Rain Intensity	≤ 15 mm/m with a driving rain < 18 m/s

(1) At higher altitudes, de-rating might be necessary according to the functional units and/or the installation altitude. For more information, refer to Installation Altitude, page 48.

Behavior in Case of Incidents

In the event of an internal arc fault, theRingmaster AirSeT unit is equipped with pressure relief flaps or exhaust ducts designed to help safely vent the resulting gases.

This operation and maintenance manual guide does not include information regarding the safety of buildings in case of internal faults (pressure load of the unit room and necessary pressure relief flaps). Pressure calculations for the unit rooms, including recommendations for pressure relief ducts, are available upon request for a fee. For more information, contact the licensed partner or Schneider Electric.

In case of fire or internal faults, toxic and caustic decomposition products are produced. Comply with the locally applicable safety provisions.

Make sure that the first-aid measures are taken in case of injury to persons.

General

Disposal After the End of the Useful Life

A material and recycling data sheet can be provided on request for the disposal of Ringmaster AirSeT RMU at the end of its service life. Disposal is performed as a service by Schneider Electric service center which is subjected to payment.

This service is compliant with IEC 62271-200 standards, and conforms to local regulations. For more information, refer to end-of-life document ENVEOLI2505026.

Design and Description

General Characteristics

The Ringmaster AirSeT is an indoor and outdoor MV secondary distribution switchgear or Smart RMU MV Gas-Insulated switchgear applications up to 12 kV 630 A designed for durability and ease of use. It comes with an IP54 rated enclosure and a stainless steel tank rated IP67.

Its simple mimic layout supports user-friendly operation, while the type C bushing options provide compatibility with a wide range of third-party termination systems.

The switchgear includes interlocked access for MV cable testing, allowing safe testing procedures without the need to disconnect the cable terminations.

Additionally, it features integrated self-powered protection for transformers or network monitoring, and supports direct coupling to transformers or cable connections, simplifying both installation and maintenance.

The Ringmaster AirSeT provides optional features as follows:

- Facilities for electrical operation.
- Electrical tripped on-fault indication.
- Range of dry type metering units.
- Remote monitoring and control through PowerLogic T300 range of Feeder Remote Terminal Units (FRTU).

For more information, contact Schneider Electric.

Configurations

The Ringmaster AirSeT is available in three different configuration:

1. RN2 AIR TLF/VIP Standalone - AF.
2. RN2 AIR TLF/VIP TX Mounted - AF.
3. RN2 AIR TLF/VIP Standalone - AF - T300.

Figure 1 - Ringmaster AirSeT

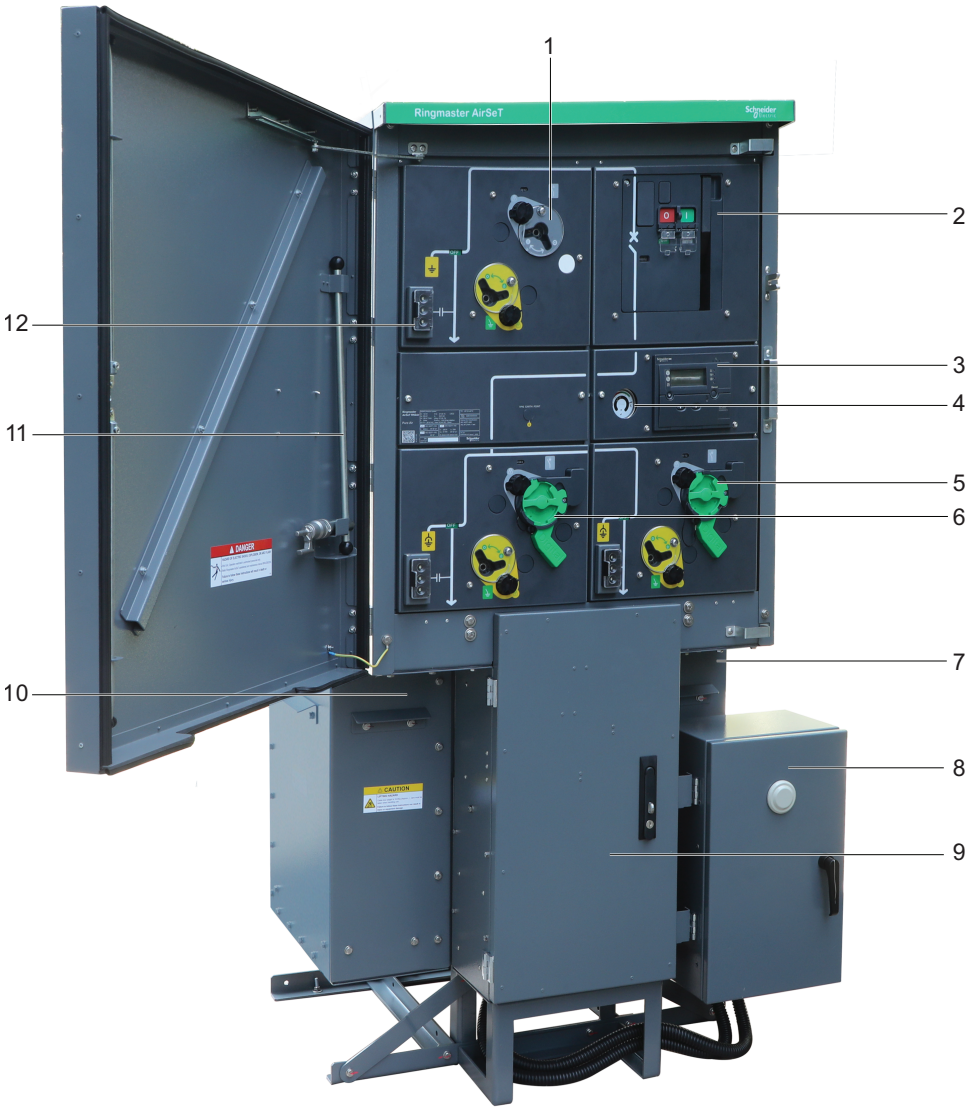

1	Disconnector/Switch Mechanism	7	Right ring switch cable box
2	VCB	8	Remote terminal unit - T300
3	Voltage and Current Protection (VIP) 400/410/45 Relay	9	LV Box
4	Manometer	10	Left ring switch cable box
5	Ring Switch 2 (RS2) Mechanism	11	Operating handle
6	Ring Switch 1 (RS1) Mechanism	12	Voltage Detecting and Indicating System (VDIS)

Identification

Figure 2 - Labels on the Ringmaster AirSeT



1 Brand name

2 Rating plate

Rating Plate

The type designation on the rating plate specifies the technical data of the Ringmaster AirSeT. To access this information, flash the QR code with smartphone or connected tablet; it will be directed to the website containing the data relating to the device.

When submitting enquiries to the manufacturer or ordering spare parts, the following information is required:

- Type designation
- Job number

Figure 3 - Rating Plate

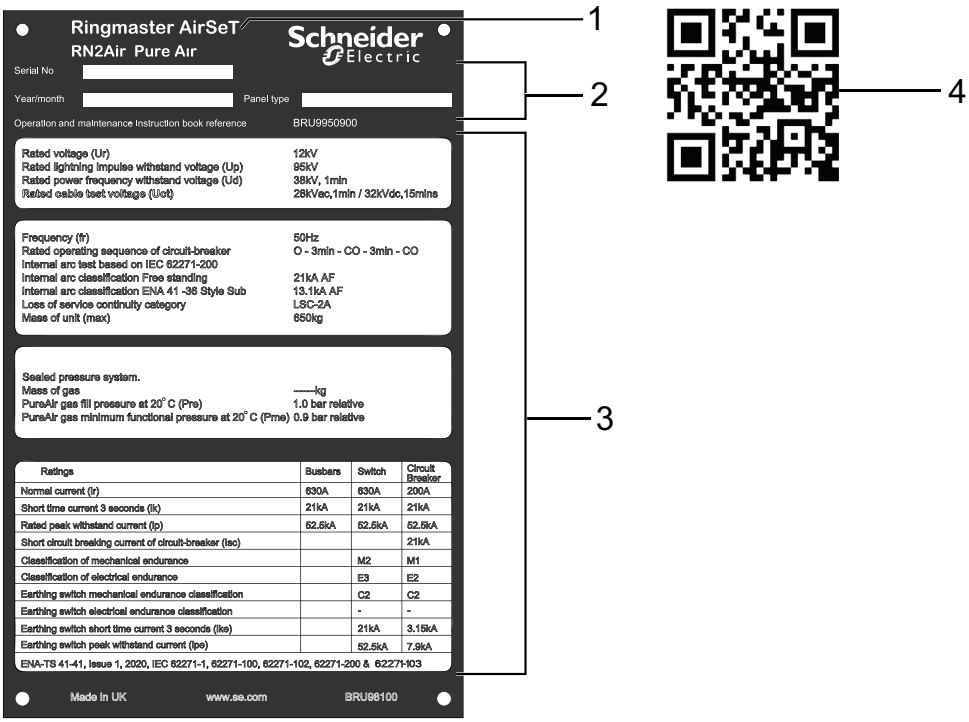

1	Type designation	3	Technical data
2	Job number	4	QR code with product information

Dimensions and Weight

Table 3 - Dimensions and Weight

Ringmaster AirSeT	Dimensions (mm)			Approximate weight (kg)
	Height	Width	Length	Weight
RN2 AIR TLF/VIP TX Mounted - AF	1800	955	1019	650 (Maximum)
RN2 AIR TLF/VIP Standalone - AF	1800	955	1195	675 (Maximum)
RN2 AIR TLF/VIP Standalone - AF - T300	1800	1041	1195	700 (Maximum)

Interlocks

The Ringmaster AirSeT complies with the recommendations of IEC 62271-200 and as per ENA 41-41 for functional interlocks and integrates a set of built-in native robust mechanical interlocks in each function.

Mechanical Interlocks

The Ringmaster AirSeT mechanical interlocks are intended to help avoid some incorrect operations.

The operation of the interlock mechanism on the switchgear is applicable for:

1. VCB and disconnector.
2. Cable test facility of RS1 and RS2.

Interlocks for VCB and Disconnector

The logic for operating the VCB and disconnector based on the current state of the unit is shown in the below Table – Ringmaster AirSeT Interlocks with VCB and Disconnector, page 17.

Table 4 - Ringmaster AirSeT Interlocks with VCB and Disconnector

Ringmaster AirSeT Interlocks with VCB and Disconnector								
Logic position of functional unit	Position before operation		Operation wished					
	Disconnec-tor	VCB	Close the Disconnector	Open the Disconnector	Close the E/S	Open the E/S	Close the VCB	Open the VCB
ON	Closed	Closed	–	⛔	⛔	⛔	–	✅
OFF not Disconnected	Closed	Open	–	✅	⛔	⛔	✅	–
OFF and Disconnected	Open	Open	✅	–	✅	–	✅	–
Earthed	Earthed	Open	⛔	⛔	–	✅	✅	–
Earthed	Earthed	Closed	⛔	⛔	–	✅	–	✅

✅ Free

⛔ Locked

Interlocks for Integrated Cable Test Facility of RS1 and RS2

The logic for operating the cable test facility and cable test switch (RS1 and RS2) based on the current state of the unit is shown in the below Table – Ringmaster AirSeT Interlocks with Cable Test Facility and Cable Test Switch (RS1 and RS2), page 18.

Table 5 - Ringmaster AirSeT Interlocks with Cable Test Facility and Cable Test Switch (RS1 and RS2)

Ringmaster AirSeT Interlocks with Cable Test Facility and Cable Test Switch (RS1 and RS2)								
Logic position of functional unit	Position before operation		Operation wished					
	Switch	Cable Test Facility	Close the Switch	Open the Switch	Close the E/S	Open the E/S	Close the Cable Test Access	Open the Cable Test Access
ON	Closed	Closed	–					
OFF	Open	Closed		–				
Earthed	Earthed	Closed			–		–	
Earthed	Earthed	Open			–			–

 Free

 Locked

Padlocks

Padlock points are provided to help prevent unauthorized access to the unit.

Padlocks are used on the earthing switch and the disconnector.

Padlocks can be supplied upon request if specified at the time of enquiry or order.

⚠CAUTION
LOSS OF PROTECTION HAZARD Ensure the padlock used has a shackle diameter between 6 to 8 mm. **Failure to follow these instructions can result in injury or equipment damage.**

Figure 4 - Padlock on Earthing Switch/Disconnector

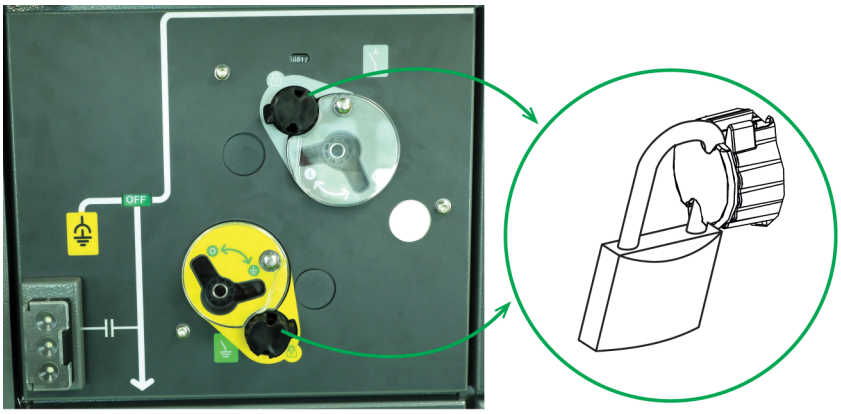

Earthing switch and the disconnector can be locked using the padlock.

NOTE: The main door and the LV compartment door can be locked by padlocks.

Handling Instructions

⚠WARNING

HAZARD OF EQUIPMENT TOPPLING

- Wear appropriate PPE.
- Keep the unit in vertical orientation while handling.
- Handle the equipment with appropriate care as specified below.

Failure to follow these instructions can result in death, serious injury, or equipment damage.

⚠CAUTION

HAZARD OF INAPPROPRIATE HANDLING, STORAGE, AND INSTALLATION

- Respect the handling rules and avoid any shocks to the device.
- Perform the maintenance and servicing operations described in the maintenance section of this guide. Refer to Maintenance, page 118.
- Observe the normal service conditions described in this guide. Refer to Storage, page 25.
- Ensure to lift the unit by using only lifting lugs, with all the four lifting points.
- Do not stand/mount anything on the unit.

Failure to follow these instructions can result in injury or equipment damage.

⚠CAUTION

HAZARD OF EQUIPMENT TOPPLING

Keep the equipment upright and handle with care. There is a tendency for the equipment to tilt due to its high center of gravity.

Failure to follow these instructions can result in injury or equipment damage.

The transport and handling information of Ringmaster AirSeT are as follows:

- Units can be carried on open topped trucks or stored outside for short periods provided that all apertures are covered.
- Units must not be considered weatherproof until the paintwork has been inspected, and if necessary, any damage must be repaired. Refer to Paintwork, page 24 for repairing damaged paintwork.
- For long-term storage, units should be kept in a warm, dry place, and protected from dust and debris.
- The conditions and types of transport have been stipulated in the contract details.
- The type of packaging depends on the type of transport and the storage conditions.

  NOTE:

  - The Ringmaster AirSeT unit is suitable for outdoor storage if it is properly packaged.
  - The type of cable gland provided will depend on the specific contract requirements.

  For detailed information, please refer to the commercial documentation included with the equipment package.

Figure 5 - Lifting of Ringmaster AirSeT

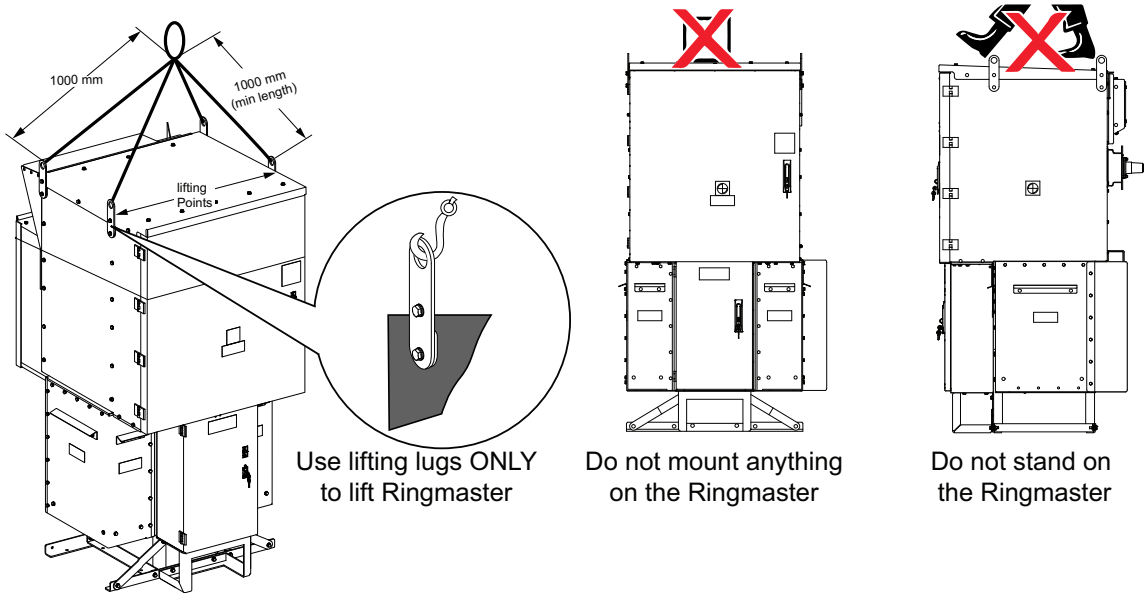

Packaging

NOTICE
HAZARD OF INCORRECT HANDLING • Qualified personnel must handle the lifting of the unit. • It is recommended to use the inspected cranes or the forklift for transportation. • The lifting or the handling of the unit from the loaded transportation vehicle should be done accordingly to the safety guidelines. • Carefully disassembly of the packaging is essential to prevent damage to the unit. **Failure to follow these instructions can result in equipment damage.**

The packaging for various modes of transportation are as follows:

- If packed exclusively for truck transport, the units are delivered on a pallet with Polyethylene (PE) protection film.
- For sea transport, the units are packed in sealed aluminum foil with desiccant and in a closed wooden case with tightly closed wooden base (also for container transport).
- In case of air transport, the units are packed in wooden crates with protective PE film hood (dust protection) or in wooden crates, also with closed wooden bases, however without protective hoods.

  NOTE: Observe the center of gravity label to help ensure proper transport. You can find the label on the packaging and on the equipment.

Figure 6 - Transport the Package with Forklift Truck

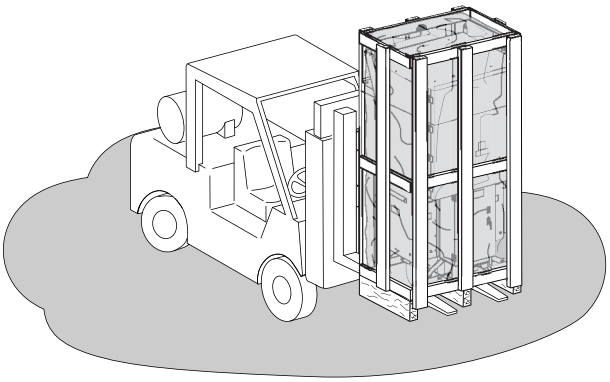

Transport

⚠WARNING

HAZARD OF EQUIPMENT TOPPLING

- When transporting the unit, ensure that the units do not tilt or tip.
- Nail down transport pallets to the loading surface.
- For transporting the trucks, comply with the transport specifications in the appropriate manuals.

Failure to follow these instructions can result in death, serious injury, or equipment damage.

⚠CAUTION

HAZARD OF EQUIPMENT TOPPLING

- The entire length of the forks must be placed under the transport unit.
- When handling forklift truck, keep the unit as close as possible from its vertical position. There is a tendency for the equipment to tilt due to its high center of gravity.

Failure to follow these instructions can result in injury or equipment damage.

All units can be off loaded by a forklift truck using the transport pallet. They can also be off loaded using the lifting lugs fitted at the top of the unit.

Figure 7 - Transport with Forklift Truck

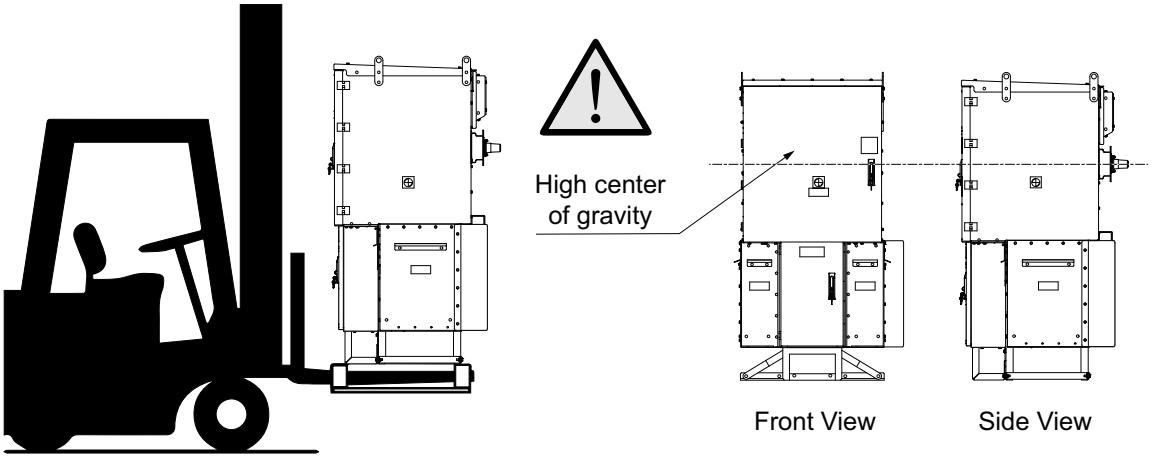

Delivery

⚠CAUTION

HAZARD OF INAPPROPRIATE ASSEMBLY

In the event of any anomaly or apparent damage, do not install, contact Schneider Electric.

Failure to follow these instructions can result in injury or equipment damage.

NOTICE

HAZARD OF INAPPROPRIATE STORAGE CONDITIONS

The functional unit must remain on its base, in its original packing. In the event of an anomaly, contact the transport/shipping company.

Failure to follow these instructions can result in equipment damage.

Shipping units must be checked upon receipt as follows:

- Inspect the equipment carefully for damage or loss incurred during transit, before accepting.
- Check the presence of accessories against the packaging list.
- Check the information on the nameplate(s) and compare against the order confirmation.
- The packing must be in place and in good condition at the time of receipt. Any damage which may have occurred in transit must be recorded and reported to the manufacturer immediately.

  NOTE: It may be necessary to unpack the equipment to establish the full extent of the problem.

Paintwork

NOTICE

HAZARD OF EQUIPMENT CORROSION

- Make sure the unit surface is clean and free from any paint damage.
- If any damage is found, repaint the affected areas. For detailed instructions, refer to the procedure below.

Failure to follow these instructions can result in equipment damage.

Check for any damaged paintwork. Damaged areas must be cleaned and re-coated as follows:

- Rub down the area around the damage with medium glass paper.
- Clean the damaged area with emery paper, to help ensure the surface is clean and free of any corrosion.
- Apply one coat of zinc-rich epoxy primer (a two-pack system is recommended), the coating to be 35–45 microns thick.
- Leave to cure for 24 hours, then apply two 35–45 micron coats (that is, 60–80 microns in total) of two-pack polyester paint. Interphane PFR 764 is recommended.

  NOTE: The additional recommended paint system is international paints Interzinc EPA 072 and EPA 073. The standard color employed is Dark Grey RAL7012.

Unpacking

All units are delivered on pallets (secured by 4 x M8 screws and nuts) and fitted with lifting lugs; suitable for off loading by forklift truck or overhead crane.

NOTE: Ancillary kits include cable boots, glands, screws, and so on. They are either packed loose with the unit or attached to the panel leg or cable boxes to help ensure all parts are ready for installation.

Storage

⚠CAUTION

HAZARD OF INAPPROPRIATE STORAGE CONDITIONS

- Keep the device in its original packaging until its final installation.
- Do not install the device if there are any signs of damage.
- Comply with the storage conditions if the unit is not being installed immediately.

Failure to follow these instructions can result in injury or equipment damage.

If the unit are not installed immediately after delivery, they can be stored under the following conditions:

- The Ringmaster AirSeT unit is suitable for indoor/outdoor storage if it is properly packaged.
- The unit and accessories should be stored sealed with desiccants in aluminum foil and packed in a wooden box (the storing time before installation is complaint with the warranty period in the terms and conditions).
- Pallets should not be removed until the installation.
- The storage room environment should be healthy, no rodents, humidity control ≤ 95%/≤ 90% for 24 hours and one month respectively, and no water on the floor.

Store the device in their original packaging, placed on dry ground or on a material insulating it from environmental condition.

Figure 8 - Storage Temperature

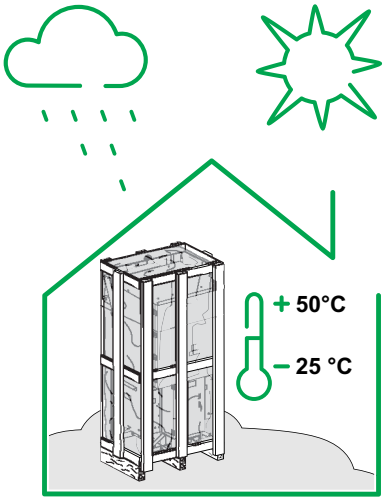

NOTICE

HAZARD OF EQUIPMENT CORROSION

Ensure that the equipment is not stored for longer than 6 months.

Failure to follow these instructions can result in equipment damage.

The unit storage conditions within the period are as follows:

- Between 6 and 12 months, perform basic level preventive maintenance to help ensure the unit operates correctly.
- Beyond 12 months, contact Schneider Electric Service local representative for check-up.

NOTE: The unit should be checked periodically for any signs of deterioration. It is recommended that unit must not be stored more than six months.

After unpacking, check the unit carefully for:

- Absence of broken or damaged parts.
- Absence of condensation marks or droplets.
- Absence of visible degradation (color change, rust, deposits, and so on).

In case of any degradation detected, the unit should not be installed.

Accessories

Accessories are dispatched as follows:

- Factory-fitted: For items that are bulky or require testing before shipment.
- Loose-boxed: For components intended for on-site assembly.

NOTE: For the list of available accessories, refer to *Ringmaster AirSeT* (998-23653257). Accessories will be specified with individual confirmation order.

Protection Systems

Time Limit Fuse

The Time Limit Fuse (TLF) protection system complies with ENA TS 41-41 and utilizes TLF as per ENA TS 12-6. This protection system offers a cost-effective solution to safeguard transformers of 1600 kVA or less. It is a widely recognized protection method, with the fuses adhering to ENA TS 12-6 (2012). The Ringmaster AirSeT range features a configuration of 2-phase overcurrent protection and earth fault protection.

TLF Selection

⚠⚠DANGER

HAZARD OF ELECTRIC SHOCK, EXPLOSION, OR ARC FLASH

- Ensure the fuses are used for the TLF protection to work correctly.
- Ensure TLF fuses are fitted prior to energising the equipment.
- Recommended TLF settings is ENA TS 12-6.

Failure to follow these instructions will result in death or serious injury.

Figure 9 - Ringmaster AirSeT TLF Overview

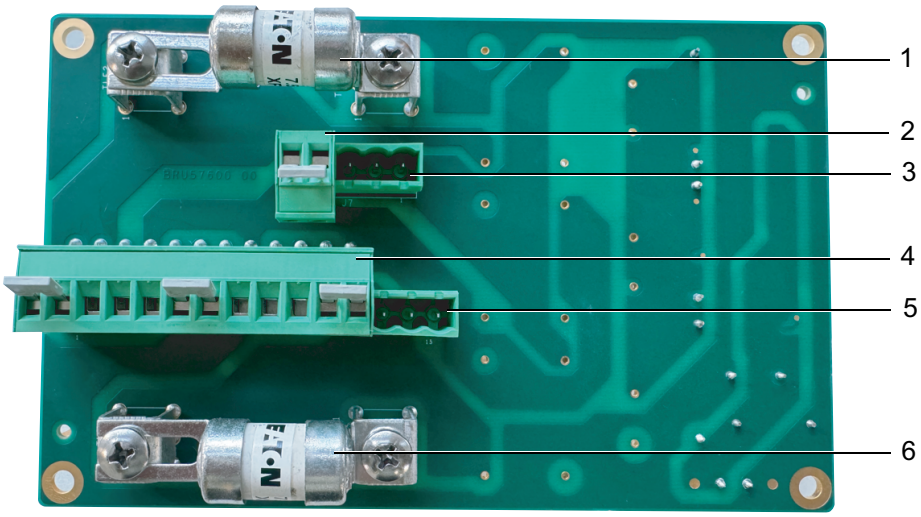

1	L1 phase overcurrent fuse	4	12 pin connector for phase overcurrent ratio selection
2	2 pin connector for earth fault sensitivity selection	5	Phase overcurrent ratio selection
3	Earth fault sensitivity selection	6	L1 phase overcurrent fuse

For the recommended TLF sizes refer to the below Table – Voltage Transformer Rated Power (kVA), page 29.

The table also recommends the maximum LV fuse size to help ensure discrimination.

Table 6 - Voltage Transformer Rated Power (kVA)

CT ratio	Service Voltage (kV)	200	315	500	800	1000	1250	1600	TLF/LV Fuse
CT ratio = 50/5(1)	3.3	–	–	–	–	–	–	–	TLF
		–	–	–	–	–	–	–	LV Fuse
	6.6	–	–	–	–	–	–	–	TLF
		–	–	–	–	–	–	–	LV Fuse
	11	3 A	–	–	–	–	–	–	TLF
		200 A	–	–	–	–	–	–	LV Fuse
	12	3 A	–	–	–	–	–	–	TLF
		200 A	–	–	–	–	–	–	LV Fuse
CT ratio = 100/5(2)	3.3	–	–	–	–	–	–	–	TLF
		–	–	–	–	–	–	–	LV Fuse
	6.6	3 A	5 A	7.5 A	–	–	–	–	TLF
		150 A	250 A	400 A	–	–	–	–	LV Fuse
	11	–	3 A	5 A	7.5 A	–	–	–	TLF
		–	315 A	400 A	630 A	–	–	–	LV Fuse
	12	–	3 A	5 A	7.5 A	–	–	–	TLF
		–	315 A	400 A	630 A	–	–	–	LV Fuse
CT ratio = 200/5(3)	3.3	3 A	5 A	7.5 A	–	–	–	–	TLF
		150 A	250 A	400 A	–	–	–	–	LV Fuse
	6.6	–	–	–	5 A	7.5 A	–	–	TLF
		–	–	–	400 A	560 A	–	–	LV Fuse
	11	–	–	–	–	5 A	5 A	7.5 A	TLF
		–	–	–	–	630 A	630 A	630 A	LV Fuse
	12	–	–	–	–	5 A	5 A	7.5 A	TLF
		–	–	–	–	630 A	630 A	630 A	LV Fuse

NOTE: The size of this fuse is less than the full load current of the transformer, however, it would normally be expected to have a number of LV fuses fed from the LV side of the transformer.

(1) Earth fault setting (instantaneous trip) 30% = 15 A and 50% = 25 A.
(2) Earth fault setting (instantaneous trip) 30% = 30 A and 50% = 50 A.
(3) Earth fault setting (instantaneous trip) 30% = 60 A and 50% = 100 A.

Operation of TLF

⚠WARNING

HAZARD OF INAPPROPRIATE OPERATION

Prior to re-energizing the system, ensure that the fuses are correctly installed. The circuit breaker may open unexpectedly under load if the fuses are not replaced before closing the circuit breaker.

Failure to follow these instructions can result in death, serious injury, or equipment damage.

The circuit consists of three 200/100/50/5 A ratio Current Transformers (CTs), Printed Circuit Board Assembly (PCBA) and Mitop coil for tripping on overcurrent and instantaneous earth fault.

Under normal load conditions, a 1000 kVA transformer operating at 11000 V will have approximately 52 A flowing through the CT primaries. If the CT ratio is set on 50/5 A ratio, then approximately 5 A will flow in the CT secondaries. As the trip circuits are shorted out by the fuses, no tripping signal will be sent to Mitop coil. Assuming that there was no earth leakage, the L1, L2, and L3 phases will balance, and no current will flow through the earth fault protection circuit.

In the event of a phase-to-phase fault of 500 A, 50 A would flow through the CT secondaries. This would blow the 15 A fuse links shunting all of the current through the tripping circuit in PCBA, which would operate the Mitop coil and trip the 3-phase circuit breaker. After ensuring the fault is cleared on the network, fuses need to be replaced before closing the breaker.

Two over-current fuses are required to cover all phase fault combinations, that is for a L1-L2 phase fault, the circuit breaker will trip on the L1 phase protection circuit. Under earth fault conditions, there will be an imbalance between the L1, L2 and L3 phases, and current will flow down the residual path of the CT and through the earth fault protection circuit. The unit will trip instantaneously.

Fuse Replacement and CT Ratio Selection

⚠⚠DANGER

HAZARD OF ELECTRIC SHOCK, EXPLOSION, OR ARC FLASH

- Ensure to short all the CTs that will not be utilized during commissioning or service.
- The circuit must be off load when changing ratios.

Failure to follow these instructions will result in death or serious injury.

The CTs 200/100/50/5 A are fitted as standard, to the ring main units along with a 200 A circuit breaker with TLF protection. Selection of the appropriate CT ratio can be easily achieved by moving the 12 pin connector on the front face of the PCBA. Refer to the Figure – CT Ratio Selection, page 31.

Figure 10 - CT Ratio Selection

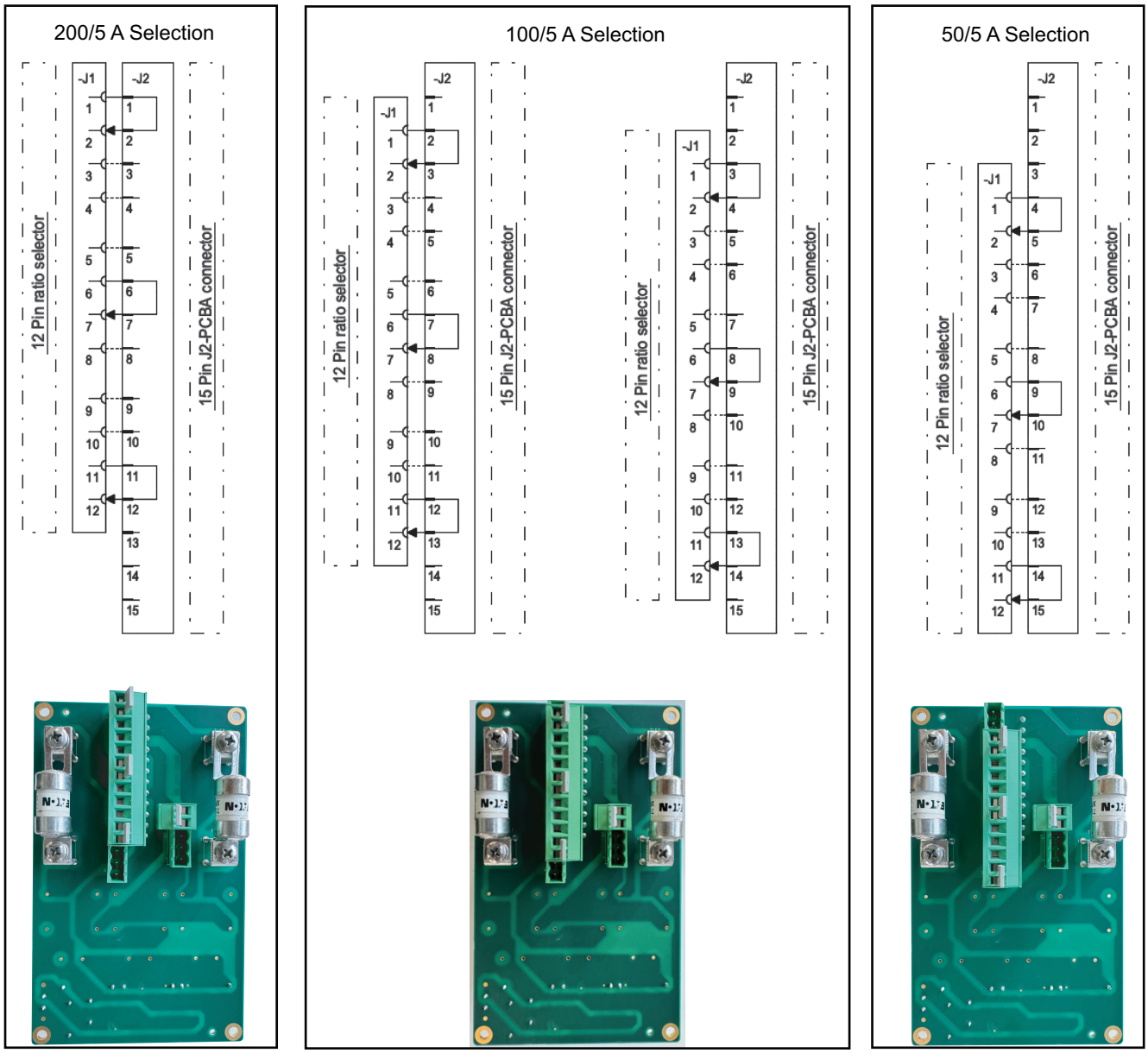

Earth fault sensitivity can be selected using the 2-pin connector on the front face of the PCBA. Refer to the Figure – Earth Fault Sensitivity, page 32.

Figure 11 - Earth Fault Sensitivity

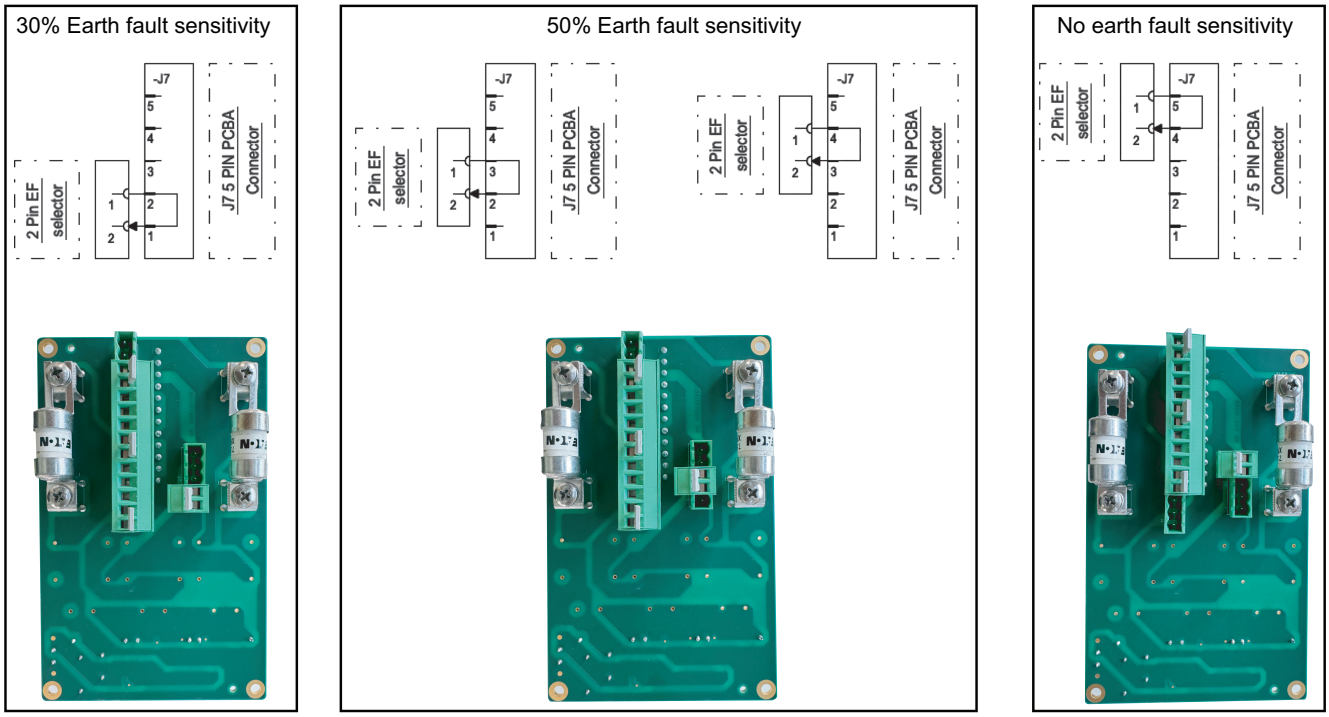

NOTE: The circuit must be off load when changing the ratios.

Protection Relays

All circuit breakers can be fitted with various forms of protection system. In the Ringmaster AirSeT the VIP (Voltage and Current Protection) self powered Inverse Definite Minimum Time (IDMT) protection relays are used.

The different types of VIP protection relays used in the unit are as follows:

- VIP 400.
- VIP 410.
- VIP 45.

VIP 400/410

VIP 400 are self-powered protection relays requiring no auxiliary power supply for the main protection functions. Self-powered protection relays increase the availability of the MV network and are suited to most applications.

- Designed to respond to voltage drop.
- Not dependent on UPS systems.
- Less dependent on the external environment (EMC, LV overvoltages) because they require no external connections.

VIP 400 protection relay suits to the buildings and MV/LV substation utilities. It provides protection curve to help protect against overloads, short-circuits and earth faults with DT (Definite Time) and IDMT standardized tripping curves and thermal overload protection. The functions are completed with measurement of currents, multi-language display and a complete set of metering.

VIP 410 protection relay suits to building substations, and MV/LV substation utilities and for power system MV loops with automation. It includes a dual power supply (self-powered plus auxiliary power supply) for communication with remote communication with Distribution Management System (DMS) and Remote Terminal Units (RTU), remote control and alarming, time stamped events recorded, load history, over-current and breaking profile. It provides same protection functions as VIP 400 and additionally it can detect cold load pick up. It also allows remote configuration with setting groups selectable according to the configuration of the MV loop.

VIP Parameter and Protection Settings

All VIP parameters and protection settings should be established in advance by the design department responsible for the application and should receive customer approval. It is assumed that the study has been conducted with careful attention, and potentially reinforced by a discrimination study. All VIP parameters and protection settings should be ready for commissioning. The VIP settings sheet can be utilized to document all the parameters and protection settings that need to be entered.

Presentation

The User-Machine Interface (UMI) on the front panel of VIP relays consists of a display, LEDs and keys. A sealable pivoting flap helps to prevent access to the setting keys by unauthorized persons.

Figure 12 - VIP 400 Closed and Open Flap

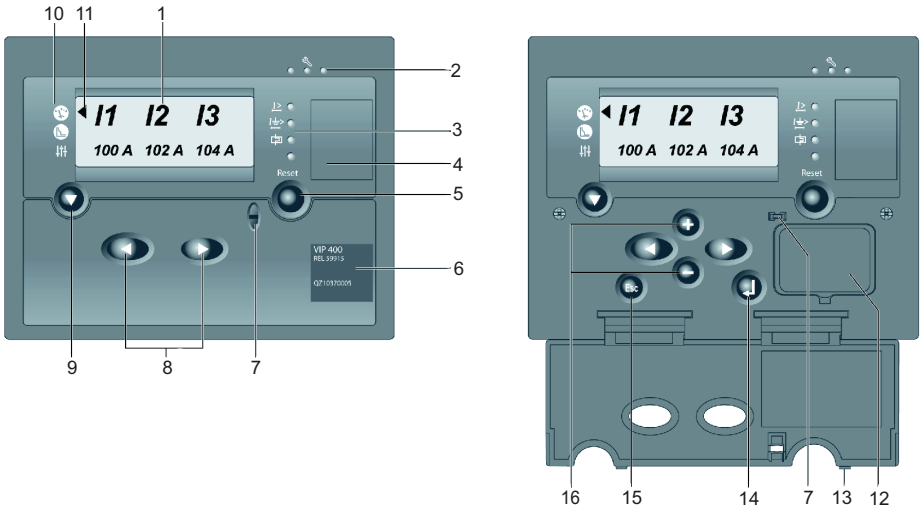

1	Display	9	Key for selecting menus and testing LEDs(4)
2	Status LEDs	10	Menu pictograms
3	Fault indication LEDs	11	Menu selection pointer
4	Zone(5)	12	Battery compartment(6)
5	Acknowledgement key	13	Settings protective flap
6	Identification label	14	Confirm entry key
7	Sealing ring	15	Abort entry key
8	Selection keys	16	Setting keys

(4) When the VIP is not supplied with power, this key can also be used to start the VIP from the battery in order to enter settings.
(5) Customized label with pictogram of the fault indication LEDs can used in this zone.
(6) It is also a socket for connecting the pocket battery module.

Identification Label

The identification label on the front panel enables a VIP to be identified.

Figure 13 - Identification Label of VIP 400/410

VIP400

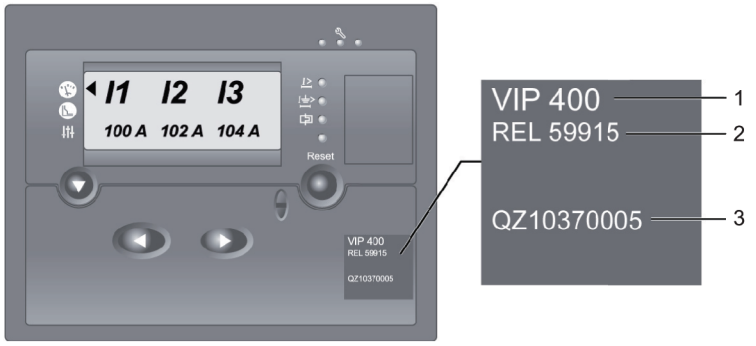

VIP410

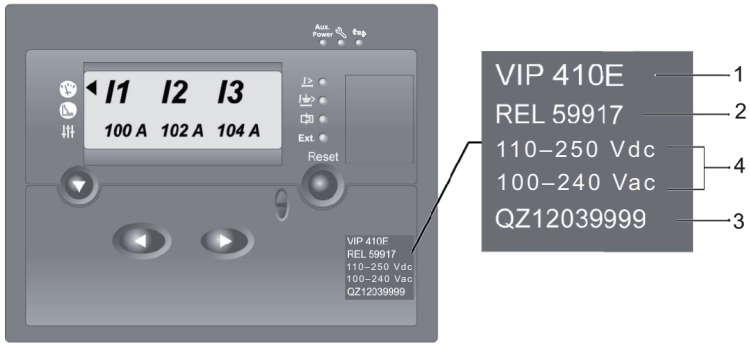

1	Product name	3	Serial number
2	Product reference	4	Supply voltage

VIP 45

VIP 45 is a protection relays with a self-powered supply. VIP 45 is powered by their current sensor and operate without an auxiliary power supply.

- The VIP 45 can be used for protection against phase faults and earth faults.
- VIP 45 displays current measurement.

Presentation

The UMI on the front panel of VIP relays consists of a display, LEDs and keys. A protective flap helps to prevent access to the setting keys by unauthorized persons.

Figure 14 - VIP 45

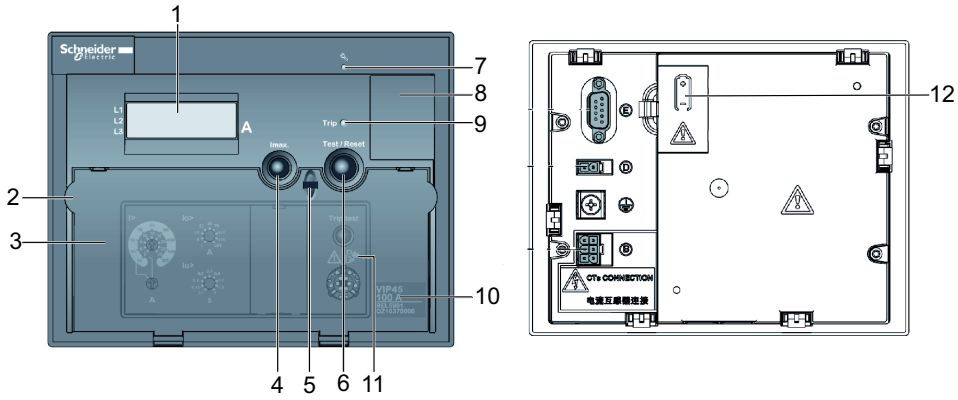

1	Display	7	Status LED
2	Lugs for opening the transparent protective flap	8	Space for a user-customizable label
3	Transparent protective flap	9	Trip fault indication LED
4	Imax. peak demand display button	10	Identification label
5	Sealing ring	11	Read manual symbol
6	Test/Reset button	12	Battery

Identification Label

The identification label on the front panel enables a VIP 45 to be identified.

Figure 15 - Identification Label of VIP 45

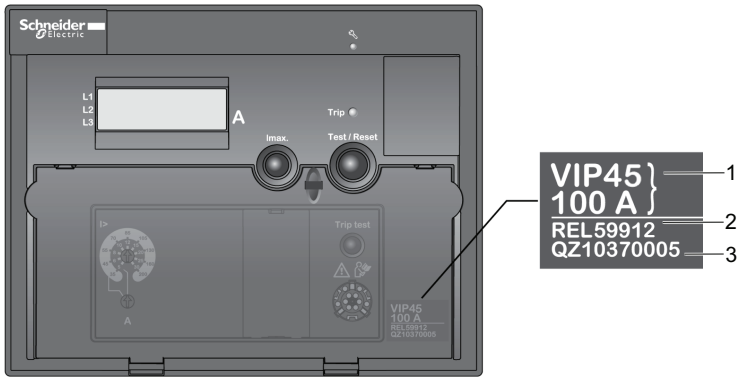

1 Product name

2 Product reference

3 Serial number

VIP 45 Settings

When the protective flap is opened, you can enter the protection settings by means of the rotary switches. To do this, use a 3 mm flat blade screwdriver.

To set the protection settings, follow the below steps:

- Open the protective flap on the VIP 45 unit.
- Use the rotary switches to enter protection settings.
- Use a 3 mm flat-blade screwdriver to do the adjustment.

Figure 16 - VIP 45 Settings

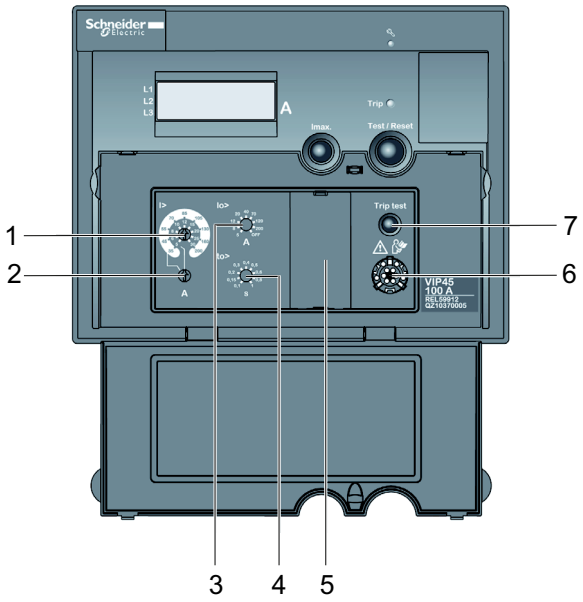

1	Phase overcurrent protection adjustment dial	5	Advanced settings protective cover
2	Setting range selector switch	6	Connection port for the pocket battery module

3	Earth fault protection set point adjustment dial	7	Trip test button
4	Earth fault protection time delay adjustment dial		

Handling Instructions of VIP Relays

The handling instructions for the VIP installed on the Ringmaster AirSeT are as follows:

- **Handling**: Handle the equipment with appropriate care, check the VIP condition by visual inspection and energizing.
- **Transport**: VIP relays can be transported by all suitable means of transport in the usual conditions for unit.
  Storage conditions should be taken into consideration for a long period of transport.
- **Storage**: It is recommended to keep the VIP in its original packaging for as long as possible to help protect the unit during storage.
  VIP relays, like all electronic devices, should not be stored in humid or damp conditions for more than one month. The relay should be powered up as soon as possible after installation to maintain optimal performance. If immediate energization is not possible, the unit reheating system must be activated to help prevent moisture-related damage.

LED Status Indicators

The status LEDs indicators provide information about the VIP general status. For details, refer to the below Table – VIP Status Indication, page 38.

Table 7 - VIP Status Indication

Pictogram	Function	VIP 400	VIP 410	VIP 45
Aux. Power	**Green LED:** Auxiliary power supply present	–	X	–
	**Red LED permanently on:**VIP unavailable (VIP in the fail-safe position)	X	X	X
	Red LED flashing: Fault has been detected but does not involve the VIP going into the fail-safe position.	X	X	X
	**Yellow LED flashing:** Communication active	–	X	–

Fault Indication LEDs

The VIP relays have fault indication LEDs. They flash to indicate a fault, refer to the below Table – VIP Fault Indication, page 39.

Table 8 - VIP Fault Indication

Pictogram	Fault	VIP 400	VIP 410
I>	Fault detection by the phase overcurrent protection or in the event of tripping by the temporary test mode.	X	X
I0>	Fault detection by the earth fault protection.	X	X
θ	Fault detection by the thermal overload protection.	X	X
Ext.	Tripping by a volt-free contact connected to the external trip input.	–	X

Following a trip event, the fault indication LEDs are powered either by the internal battery embedded in the VIP unit or, in the case of the VIP 410, by its auxiliary power supply.

The fault indication LEDs can be reset using one of the following methods:

- **Manual Reset:** Press the Reset key on the front panel of the VIP unit.
- **Automatic Reset:** The LEDs reset automatically when there is reappearance of a current in the network higher than the pick-up current. The LEDs reset automatically 24 hours after the trip event.
- **Remote Reset (VIP 410 only):** The LEDs can be reset via remote control order through communication.

Civil Engineering

Floor Preparation Test

The non-extensible units can be directly bolted to the concrete floor by use of 4 x M10 (supplied) UNI-FIX or similar rag bolt fixings. The floor tolerance for the unit is ±1 mm over 1 m.
For details refer to Figure – Switchboard Bolt Tolerance, page 40.

Figure 17 - Switchboard Bolt Tolerance

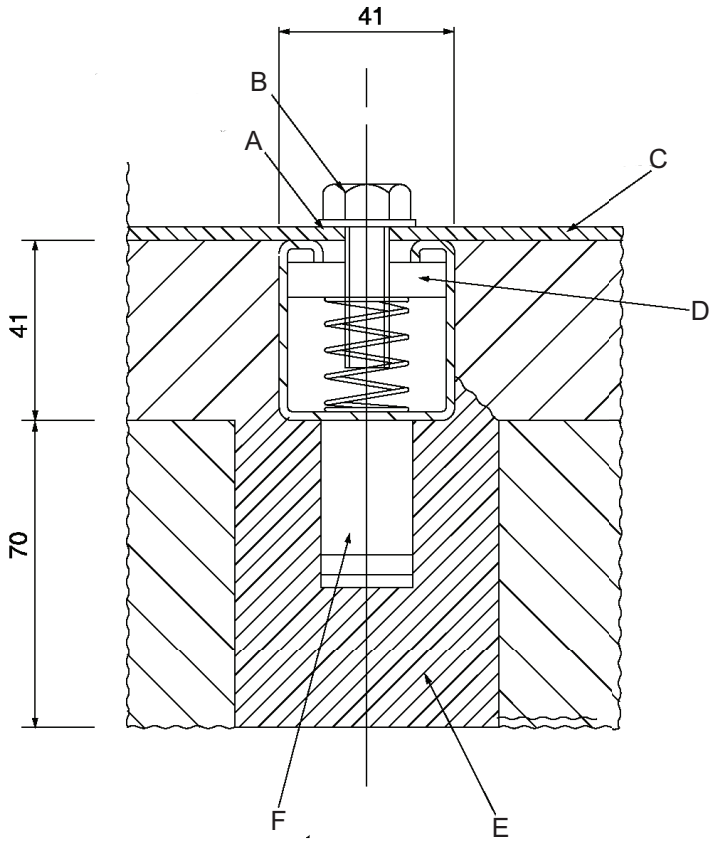

A	Foot of unit
B	M10 channel fixing
C	Floor level flush to +/-1 mm with foundation channel
D	Spring loaded channel nut
E	Channels made in subfloor
F	Channels grouted in position using setting jigs supplied

NOTE: If the floor does not meet the specified tolerance, it is highly recommended to use foundation channels, such as Unistrut P3270 or similar. The floor should be 1 mm below the top of the Unistrut.

Cable Trench

The operation and maintenance manual provides details on the maximum cable trench width for areas where the equipment will be positioned over a trench.

NOTICE

HAZARD OF INCORRECT CABLE INSTALLATION

Ensure to handle the cable bend with utmost care. Comply with the bend radius specified by the cable manufacturer.

Failure to follow these instructions can result in equipment damage.

Figure 18 - Cable Trench – RN2 AIR TX Mounted

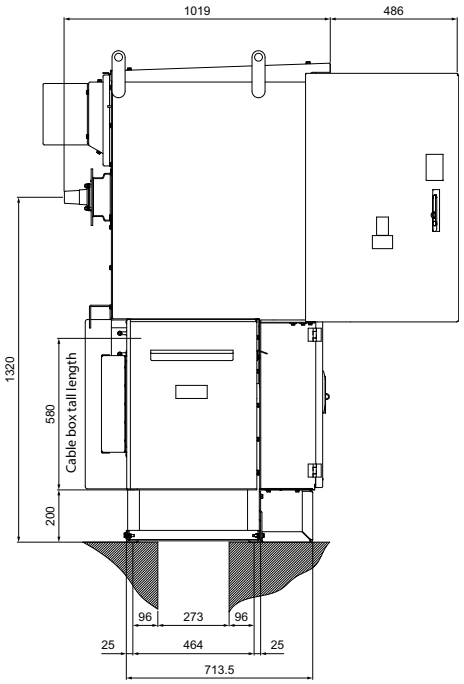

Figure 19 - Cable Trench – RN2 AIR Standalone

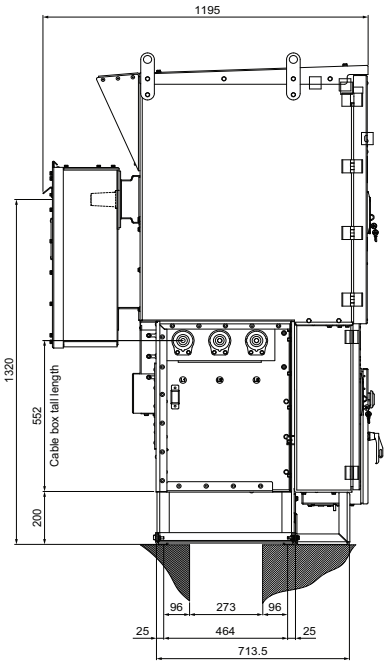

Figure 20 - Single and Three Cable Core Floor Fittings

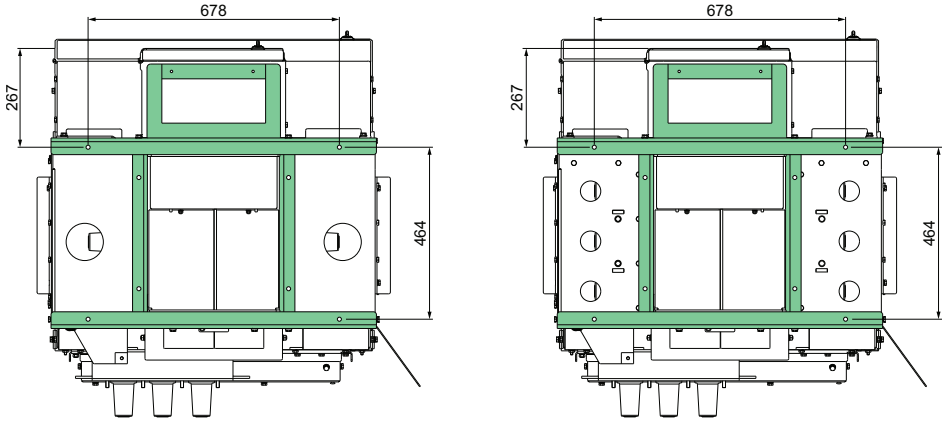

Sizing of the Civil Engineering for Network Switch

The civil engineering dimensions apply specifically to the 3-function Ringmaster AirSeT unit. Refer to Figure – 3-Function Ringmaster AirSeT Unit, page 42.

Cables can be routed from both the left and right sides, depending on site layout.

Figure 21 - 3-Function Ringmaster AirSeT Unit

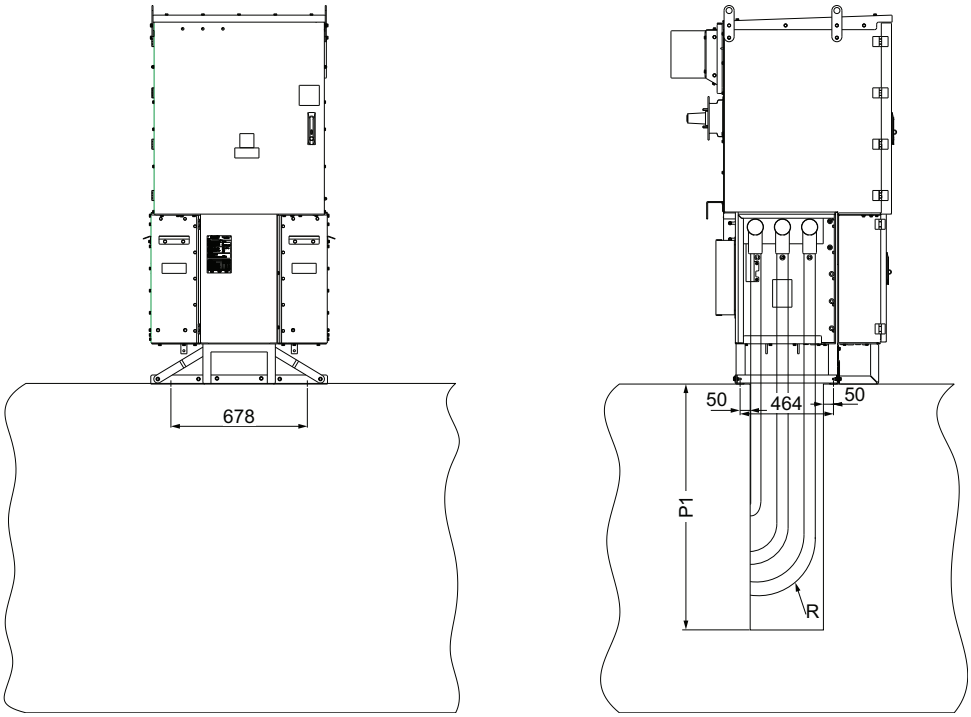

P1 Depth of Trench

R Curvature Radius of Cable

Depth of Trench

NOTICE

HAZARD OF INAPPROPRIATE CABLE INSTALLATION

Follow the standard values of cable specifications listed in the below Table – Cable Specification, page 43 (information only); however, Schneider Electric does not guarantee these values.

Failure to follow these instructions can result in equipment damage.

Table 9 - Cable Specification

Cable insulation	Cable	Cross section(7)	Bending Radius: R(8)	Depth: P1(8)
Dry insulation	Single-core	≤ 150 mm^2	500 mm	550 mm
		185–300 mm^2	600 mm	
	Three-core	≤ 150 mm^2	550 mm	660 mm
		185 mm^2	650 mm	770 mm
Paper impregnated with non-fraining material	Single-core	≤ 150 mm^2	500 mm	580 mm
		185–300 mm^2	675 mm	800 mm
	Three-core	≤ 95 mm^2	635 mm	750 mm
		150–300 mm^2	835 mm	970 mm

(7) For other cross sections, contact Schneider Electric.
(8) These values are only for indication, refer to the cable supplier technical documentation.

Sizing of the Civil Engineering for Ringmaster AirSeT

The civil engineering dimensions apply specifically to the 3-function Ringmaster AirSeT unit. Refer to Figure – Positioning of Ringmaster AirSeT Unit from Wall, page 44.

Figure 22 - Positioning of Ringmaster AirSeT Unit from Wall

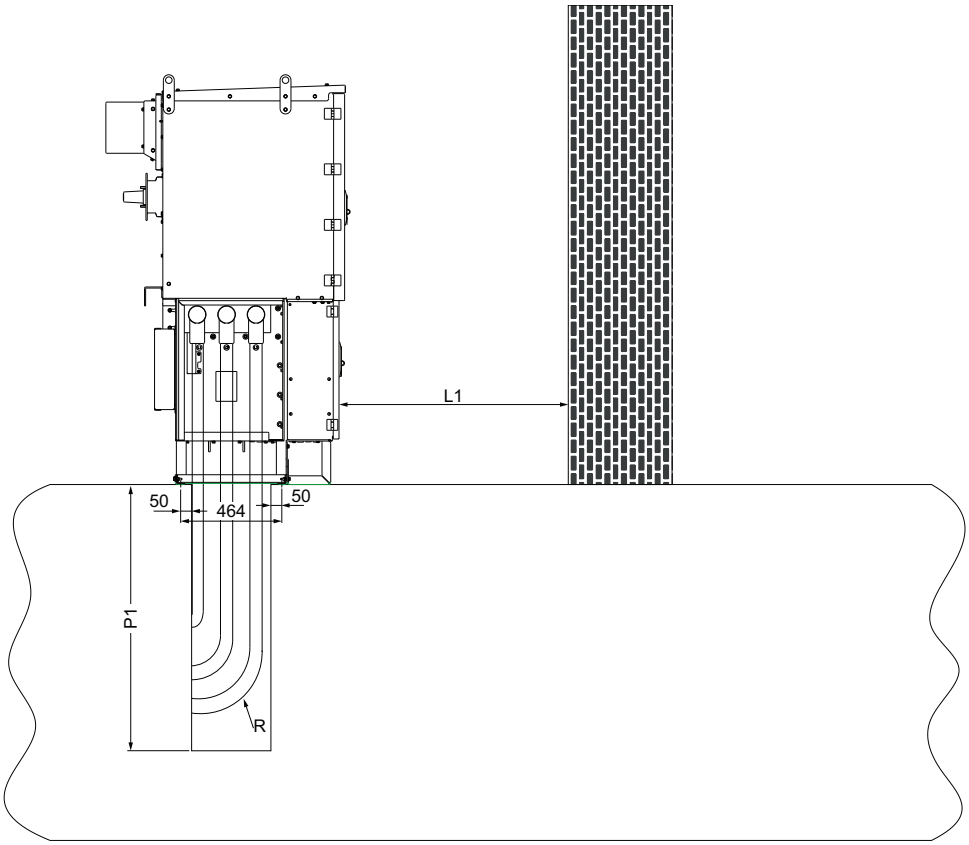

L1 Recommended minimum clearance: 800 mm for safe operation, access and egress

P1 Depth of Trench

R Curvature Radius of Cable

Internal Arc Installation Condition

The position of the gas exhaust at the rear/top of the unit depends upon the internal arc classification.

- AF configuration: Protection at the front side of the switchgear only, the exhaust is present at the rear side.
- AFLR configuration: Protection at the front, lateral, and rear sides of the switchgear, the exhaust is present at the top.

  NOTE: AFLR configuration is for the gas enclosure only.

⚠⚠DANGER

HAZARD OF ELECTRIC SHOCK, EXPLOSION, OR ARC FLASH

- When the equipment is energized, do not access the rear or lateral sides of the unit. There is no protection against internal arc faults on the rear and lateral sides in AF configurations.
- Ensure that the recommended free air volumes behind the units are maintained when installed in an enclosed substation, as specified in the Table – Spacing Around the Ringmaster AirSeT, page 47.
- If maintaining the minimum required free air space is not feasible, consult Schneider Electric for guidance prior to designing and installing internal arc trunking.

Failure to follow these instructions will result in death or serious injury.

⚠CAUTION

HAZARD OF INSTALLING UNDER INADEQUATE CONDITIONS

Ensure to comply with the specified spacing requirements around the RN2 Air. For details, refer to the below Table – Spacing Around the Ringmaster AirSeT, page 47.

Failure to follow these instructions can result in injury or equipment damage.

Figure 23 - Exhaust Gas Flow of Ringmaster AirSeT for AF configuration

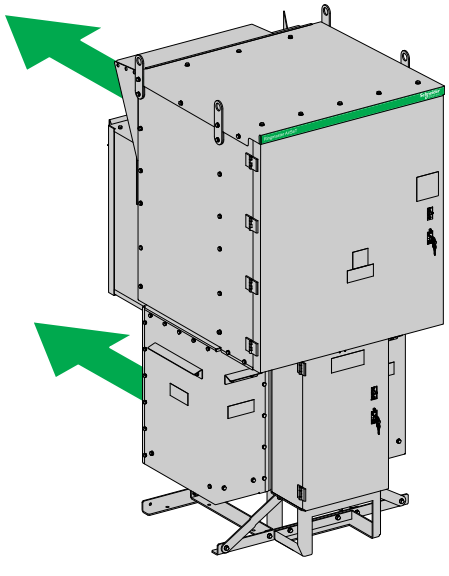

Figure 24 - Exhaust Gas Flow of Ringmaster AirSeT for AFLR configuration

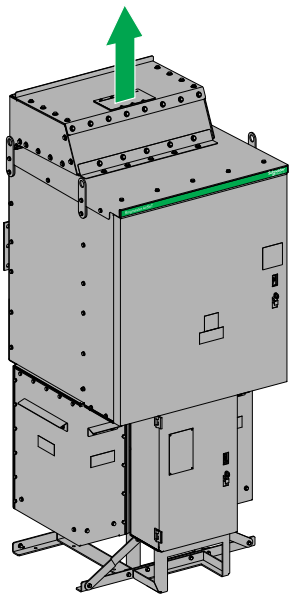

NOTE: The green arrows indicate the path of exhaust gases.

Table 10 - Spacing Around the Ringmaster AirSeT

Substation Type	Fault Rating	Minimum Substation Dimensions					Recommended Kits
		Distance to side wall in m	Substation minimum width in m	Rear wall in m	Ceiling in m	Free air volume behind the unit in m^3	
Free standing/ IEC room simulation	AF: 12.5 kA	1	3	1	3	9	RMD-F664 (Angled deflector)
	AF: 21 kA	1.5	3.9	2	4	31	RMD-F664 (Angled deflector) RMD-F444-RS1 RMD-F444-RS2
		1	3	1	3	9	RMR-A675 (arc filter on the lid) Cable box rating available only for 13.1 kA AF
ENA 41-36 style unit substation (dimensions are considered from the back of the transformer to the rear wall as shown in figure 1.13 of ENA 41-36)	AF: 12.5 kA	NA	3	0.6	2.1	4	RMD-F500 (Half opened angled deflector)
	AF: 21 kA	1	3	0.6	2.4	4	RMR-A675 (arc filter on the lid)
Free standing/ IEC outdoor simulation to performance level IAC	AF: 21 kA	1.5	3.9	2	4	31	RMD-F664 (Angled deflector) RMD-F444-RS1 RMD-F444-RS2
	AFLR: 21 kA						RMD-F863 (AFLR deflector) RMD-F444-RS1 RMD-F444-RS2

Installation

⚠CAUTION

HAZARD OF INCORRECT INSTALLATION AND SERVICE CONDITIONS

- If the installation site exceeds the specified temperature or altitude parameters, contact Schneider Electric.
- It is recommended to contact Schneider Electric for appropriate de-rating factors to ensure the units operational safely and reliability under those specific environmental conditions.

Failure to follow these instructions can result in injury or equipment damage.

⚠CAUTION

HAZARD OF CORROSION

The Ringmaster AirSeT units are suitable for both indoor and outdoor installation. However, they must be protected from frequent exposure to extreme weather conditions, including:

- Heavy rainstorms
- Significant snowfall and ice accumulation
- Flooding
- Temperature extremes beyond +40°C or below -25°C
- Dense coastal fog
- Acid rain.

Failure to follow these instructions can result in injury or equipment damage.

NOTICE

HAZARD OF INSTALLING UNDER INADEQUATE CONDITIONS

Ensure the civil engineering slab should have a high-quality finish and be structurally capable of supporting a weight of approximately 650 Kg. The surface should be level and stable prior to installation.

Failure to follow these instructions can result in equipment damage.

Installation Altitude

⚠CAUTION

HAZARD OF INCORRECT OPERATING CONDITIONS

Do not install the Ringmaster AirSeT at an altitude above 1000 m from sea level.

Failure to follow these instructions can result in injury or equipment damage.

NOTE: For installation of Ringmaster AirSeT unit above 1000 m elevation, consult Schneider Electric.

For altitudes above 1000 m, de-rating may be required depending on the specific functional units and the installation altitude. Refer to the below Table – Ambient Temperature De-rating, page 49.

Table 11 - Ambient Temperature De-rating

Temperature De-rating		Temperature				
Function	**Rating**	**40 °C**	**45 °C**	**50 °C**	**55 °C**	**60 °C**
Bus bar	630 A	630 A	600 A	570 A	540 A	510 A
Circuit breaker and disconnector	200 A	200 A	190 A	180 A	170 A	160 A

NOTE: For specific rating cases, contact Schneider Electric.

Mission Profile

The standard operating conditions of mission profile are defined by IEC 62271-1. For mission profiles or environmental conditions not covered by this standard, contact Schneider Electric.

Connection of MV Cables

⚠WARNING

HAZARD OF INAPPROPRIATE ASSEMBLY

Follow the below instructions before connecting the high voltage cables and all connections:

- All connections must be made according to the manufacturer's instructions.
- Ensure the equipment is firmly secured to the ground.
- Connect the Ringmaster AirSeT frame to the main earth bar (refer to Figure – Main Earth Bar, page 50).
- Ensure that the earthing switch of cable box bushings is in the ON position.

Failure to follow these instructions can result in death, serious injury, or equipment damage.

NOTE: Access to the bushings for the switch provided on the lateral sides, and for the circuit breaker at the rear side.

Figure 25 - Main Earth Bar



1 Main Earth Bar

Instructions for Connecting MV Cables

⚠⚠DANGER

HAZARD OF ELECTRIC SHOCK, EXPLOSION, OR ARC FLASH

Comply with the following instructions for single and triple core MV cables:

- The force exerted by the cable on the bushing should not exceed 300 N (standard IEC 60137: 2017).
- Install the insulating blanking plug on bushings without cable.
- Ensure the unit fixed to the ground before the MV cables are connected.

Failure to follow these instructions will result in death or serious injury.

The depth of the cable duct must be compatible with the cable curvature radius, as indicated in the sizing of civil engineering, page 44 for each type of unit.

Figure 26 - Correct Cable Assembly

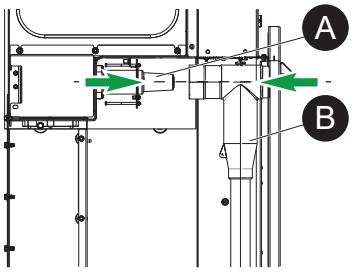

Correct assembly: Correctly align the plug-in socket **(B)** on the bushing **(A)**.

Figure 27 - Incorrect Cable Assembly

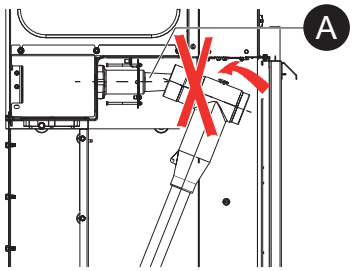

Incorrect assembly: Make sure the cable does not pull on the bushing **(A)** to avoid damage on the bushing.

NOTICE

HAZARD OF INAPPROPRIATE INSTALLATION

Never use a bar to pull the cable and bring the connection eyelet onto the bushing. This could damage the bushing and irrevocably damage the unit.

Failure to follow these instructions can result in equipment damage.

Figure 28 - Inappropriate Method of Cable Installation

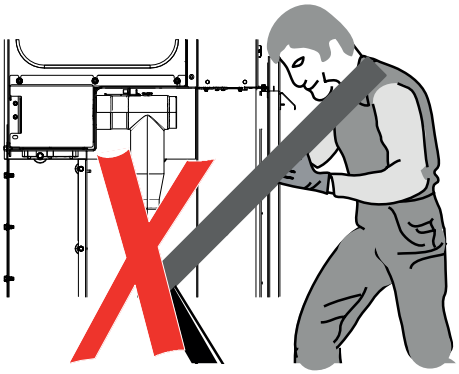

In the absence of any mechanical load, the terminal line must be perfectly aligned with the line of the bushing. The length of the MV cable must be adjusted for each phase.

NOTE: Use only the tools specified by the socket manufacturer to install the socket on the bushings.

Different Types of Bushings

There are two different types of bushings fitted in the Ringmaster AirSeT unit, they are:

1. Switch bushing.
2. CB bushing.

Figure 29 - Switch Bushing

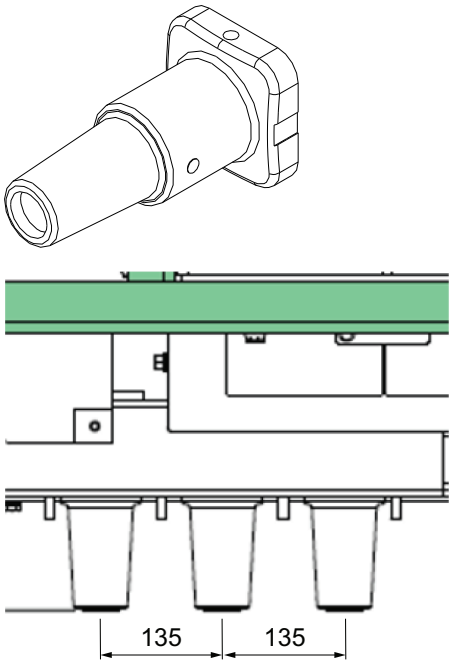

Medium bushing type C is made to fit 50 mm Current Transformer (CT) from Schneider Electric and most CTs used in fault indicators.

Figure 30 - CB Bushing

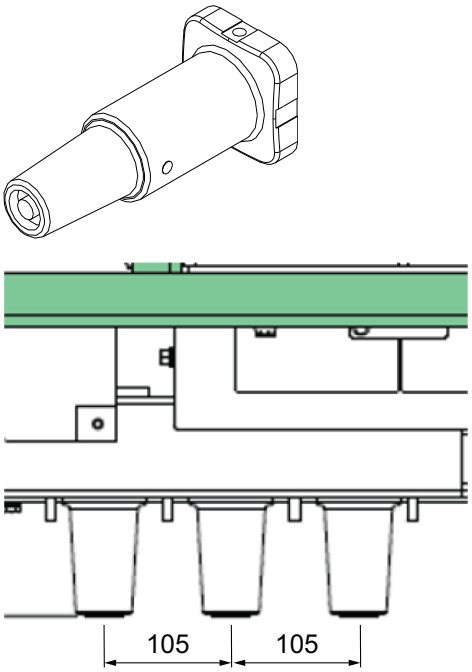

Long bushing type C is made to fit 50 mm or 90 mm CTs from Schneider Electric and most CTs used in fault indicators.

Earthing of the Cables

The Ringmaster AirSeT cable compartment supports a single cable connection per phase.

Figure 31 - Connection of the cables to the earthing bar

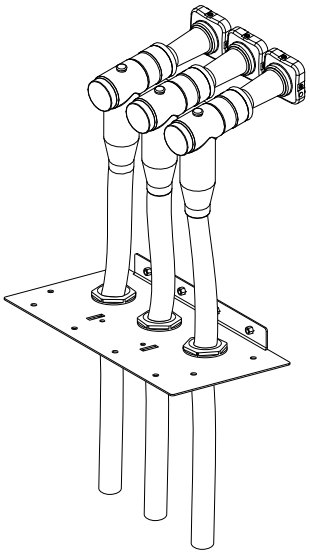

Figure 32 - Connection of the cables to the cable clamp

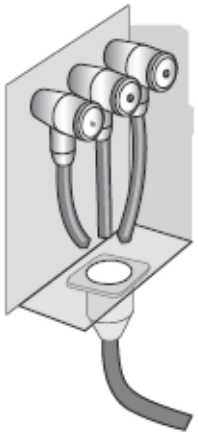

NOTE: There are two earthing wires for the cable and cable head, but for simplicity, only one wire per cable is shown in the drawings.

Connection of Single Core Cables

⚠⚠DANGER

HAZARD OF ELECTRIC SHOCK, EXPLOSION, OR ARC FLASH

Before connecting the cables, ensure the following:

- The unit is connected to the main earth bar.
- The RS1, RS2, and CB earthing switch are in closed position.

Failure to follow these instructions will result in death or serious injury.

⚠CAUTION

HAZARD OF INCORRECT CABLE INSTALLATION

- Always secure the cable with the appropriate gland plate, before connecting cable to the bushing.
- Ensure the weight of the cable is always supported by the cable gland.
- Only use cable connectors supplied with the equipment. By the use of other connectors, long term dielectric withstand may be impaired.
- Comply with the screw fastening standards while applying torque.

Failure to follow these instructions can result in injury or equipment damage.

Figure 33 - Cable Assembly

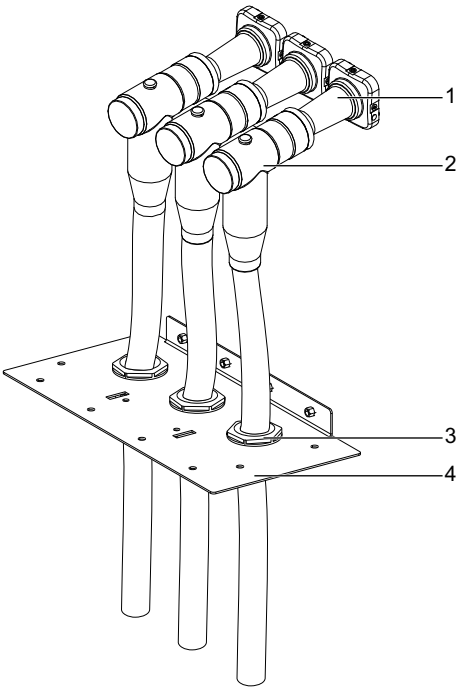

1	Bushing	3	Grommet/Gland
2	Socket	4	Gland Plate

Follow the below steps to connect the single core cables:

1. Remove the 22 quantities of M8 x 25 screws (1) from the cable box cover (2).

Figure 34 - Cable Box

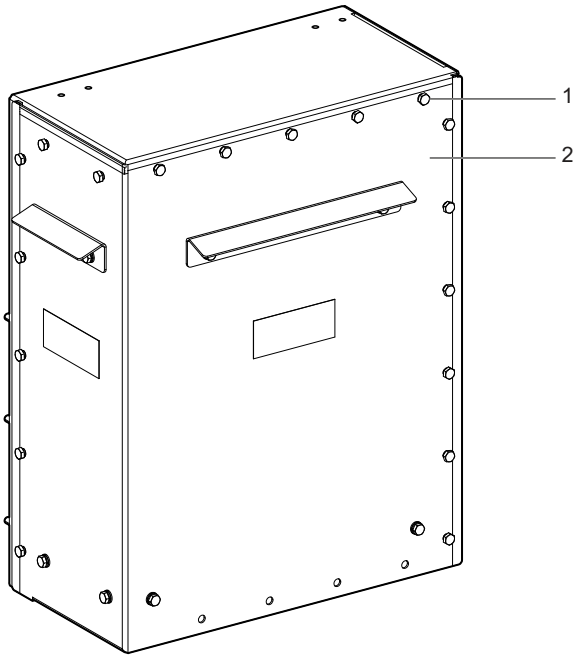

2. Remove the cable box cover.
3. Remove the 10 quantities of M8 x 25 screws from the gland plate. For detailed information on the gland plate, refer to *Ringmaster AirSeT Catalog* (998-23653257).
4. Remove the gland plate.
5. Assemble the cables as follows:
   a. Cut the incoming cable to the correct length.
   b. Adjust the length of the incoming cables with the bushing of the Ringmaster AirSeT unit.

Figure 35 - Cutting the Cable Length

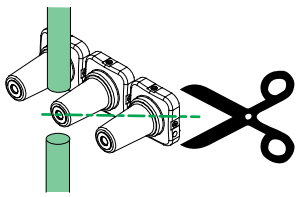

6. Adjust the gland (3) then slide one cable through the gland until the set is embedded in the gland plate (4).

   NOTE: Repeat this operation for each 3-phase cable RS1 and RS2 of the Ringmaster AirSeT functional unit.

Figure 36 - Adjusting the Gland

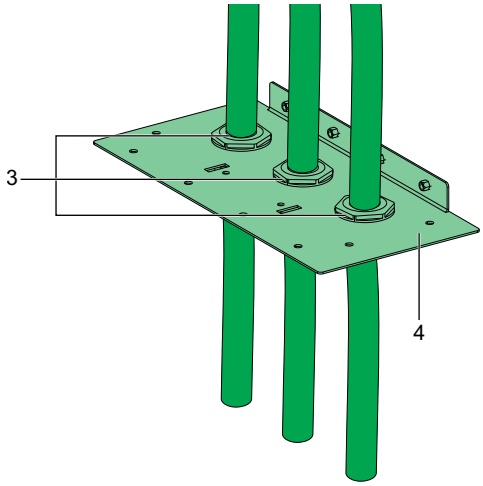

7. Connect the incoming cables with the sockets. Refer to the socket manufacturer instructions for the cable head connection.

Figure 37 - Socket Fixing on Cable Head

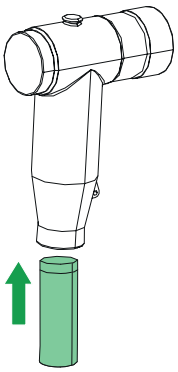

8. Prepare the sockets and bushings by cleaning the interior surface of the sockets (5) and the exterior surface of the bushings (6) with a lint-free cloth.

NOTICE
HAZARD OF INAPPROPRIATE CLEANING Do not use solvents or alcohol for cleaning. Use demineralized water for cleaning. **Failure to follow these instructions can result in equipment damage.**

Figure 38 - Cleaning the Sockets and Bushings

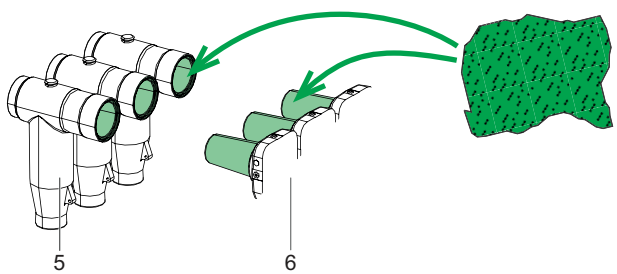

9. Lubricate the interior surface of the sockets and the exterior surface of the bushings.

Figure 39 - Lubricating of Sockets and Bushings

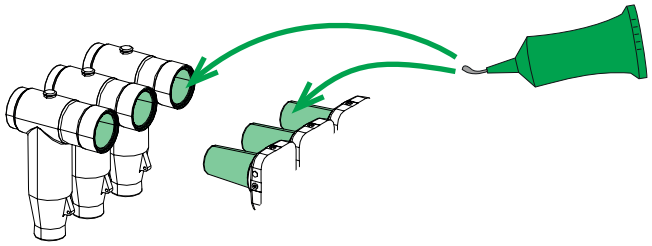

10. Plug the sockets on the bushings as follows:

⚠WARNING

HAZARD OF INCORRECT OPERATION

- Use only the tools and the torque recommended by the manufacturers with a maximum limit of 50 ± 5 N•m.
- Align the sockets with the bushing heights.

Failure to follow these instructions can result in death, serious injury, or equipment damage.

⚠CAUTION

HAZARD OF INAPPROPRIATE CONNECTION OF CABLE TERMINAL

- When terminating the cables they must be fixed to the gland plate using a cable gland to support the cable weight before the cables are connected to the terminal.
- Make sure the cable connections L1, L2, and L3 are connected in sequence to the unit bushing.

Failure to follow these instructions can result in injury or equipment damage.

a. Install the M16 end of the double-end studs (9) on the bushings (6) then plug the sockets (5) on the bushings.

b. Fasten the nuts (8), and then install the covers (7).

c. Refer to the socket manufacturer instructions for more assembly details. Only tools recommended by the socket manufacturer can be used to facilitate the installation. To avoid any mechanical load on the bushings, sockets (5) must be properly aligned with the bushings (6).

Figure 40 - Aligning the Sockets and Bushings

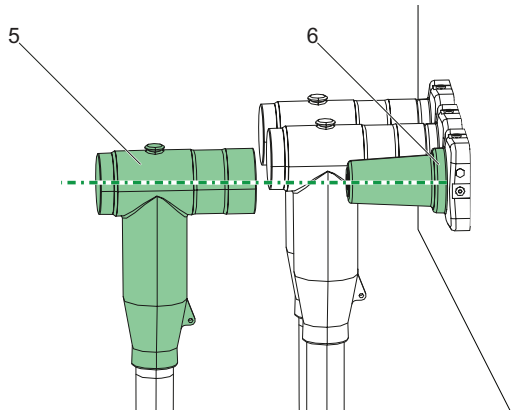

Figure 41 - Connecting the Sockets on the Bushings

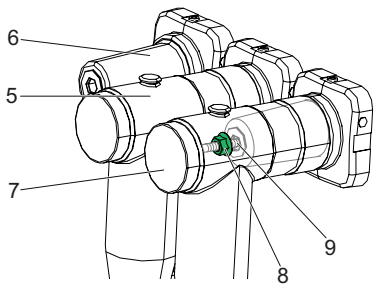

11. Connect the earthing wires as follows:
    a. For the standard earth collector, connect the sockets to the three screws on the cable clamp.

Figure 42 - Connecting the Earthing Wires on Standard Earth Collector

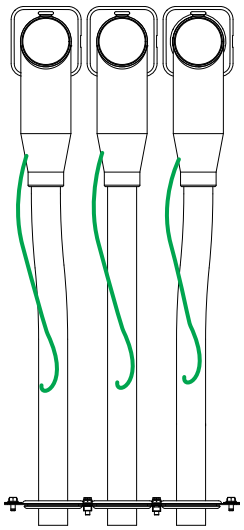

    b. For the earthing bar assembly, connect the sockets (5) to the earthing bar by using the three earthing wires provided.

Figure 43 - Connecting the Earthing Wires on Earthing Bar Assembly

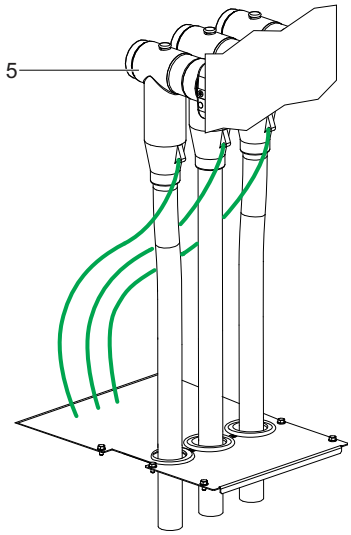

12. When the installation of the MV cables is completed, check that no load is exerted by installation of the cable tightening parts.

13. Re-install the cable box cover with 22 quantities of M8 x 25 screws on the cable box compartment.

⚠DANGER

LOSS OF PROTECTION HAZARD

Carefully inspect the cable compartment for tools and parts (for example, piece of cable, cleaning cloth, screws, or nuts) that may have been left inside the equipment.

Failure to follow these instructions will result in death or serious injury.

⚠CAUTION

HAZARD OF INAPPROPRIATE ASSEMBLY

- Ensure that the cable cover fitted with all the fasteners together with gasket and neoprene washers.
- Ensure that the internal arc flap is also fitted to the cable box.

Failure to follow these instructions can result in injury or equipment damage.

14. Torque the screws to 20 N•m.

Internal Arc Diverter Plate

Follow the below instruction to assemble the internal arc diverter plate on the Ringmaster AirSeT after installing the cable connection:

1. Install the internal arc diverter plate (1) when attaching the cable box cover.
2. Mount the internal arc diverter plate (1) on the rear side of the unit, following the orientation as shown in Figure – Internal Arc Diverter Plate for Transformer Configuration, page 61.
3. Install six quantities of M8 x 25 Hex. bolts and torque the bolts to 20 N•m.

Figure 44 - Internal Arc Diverter Plate for Transformer Configuration

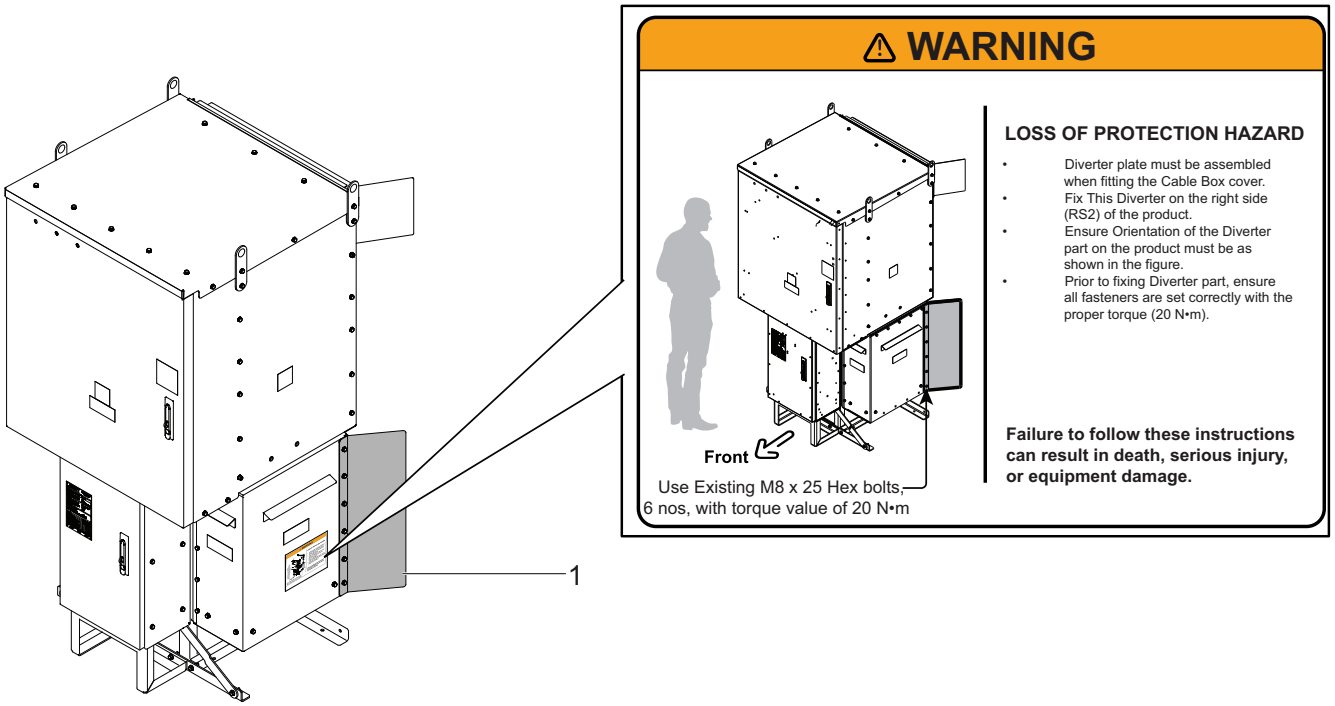

1 Internal Arc Diverter Plate

Transformer Mounting

⚠WARNING

HAZARD OF INAPPROPRIATE ASSEMBLY

- Ensure the transformer stud length does not exceed 60 mm, as this is the maximum compatible with the transformer flange for proper assembly.
- Follow the transformer coupling procedure given below to ensure a safe and secure connection.

Failure to follow these instructions can result in death, serious injury, or equipment damage.

Figure 45 - Dimensions of Transformer Flange

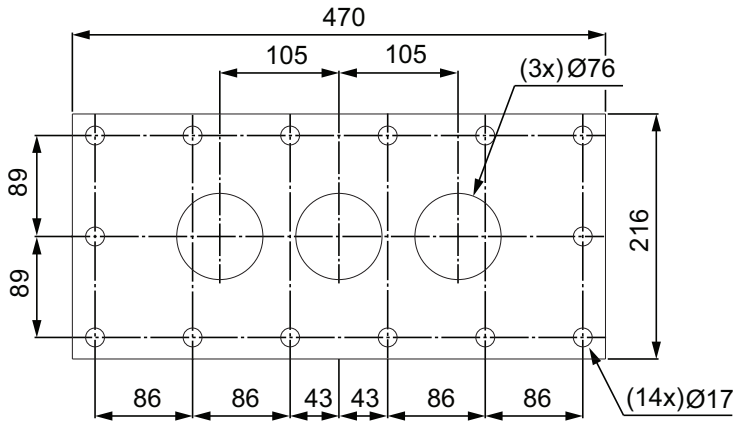

MOUNTING FLANGE

Couple the Ringmaster AirSeT unit with the transformer as follows:

1. Remove the transformer lid screws and lid, and then pump oil out (into a clean and dry drum) to below High Voltage (HV) pocket height.
2. Remove the blanking plate and move the units together.
3. Insert the bushing gasket and make firm connections on the flanges and support brackets.
4. Connect the 3-phase connections, make sure they are tight and in the correct phase sequence, onto the copper studs in the bushings.
5. After coupling the transformer, torque the M12 transformer termination lug to 25 N•m.
6. Pump clean oil back to the cold oil fill up to the level marked on the transformer oil gauge.
7. Re-fit the transformer lid and make sure that there is no damage to the gasket.
8. Touch up the paint as necessary.
9. Perform the primary winding resistance test and insulation resistance test.

Figure 46 - Arrangement of Ringmaster AirSeT in Substation

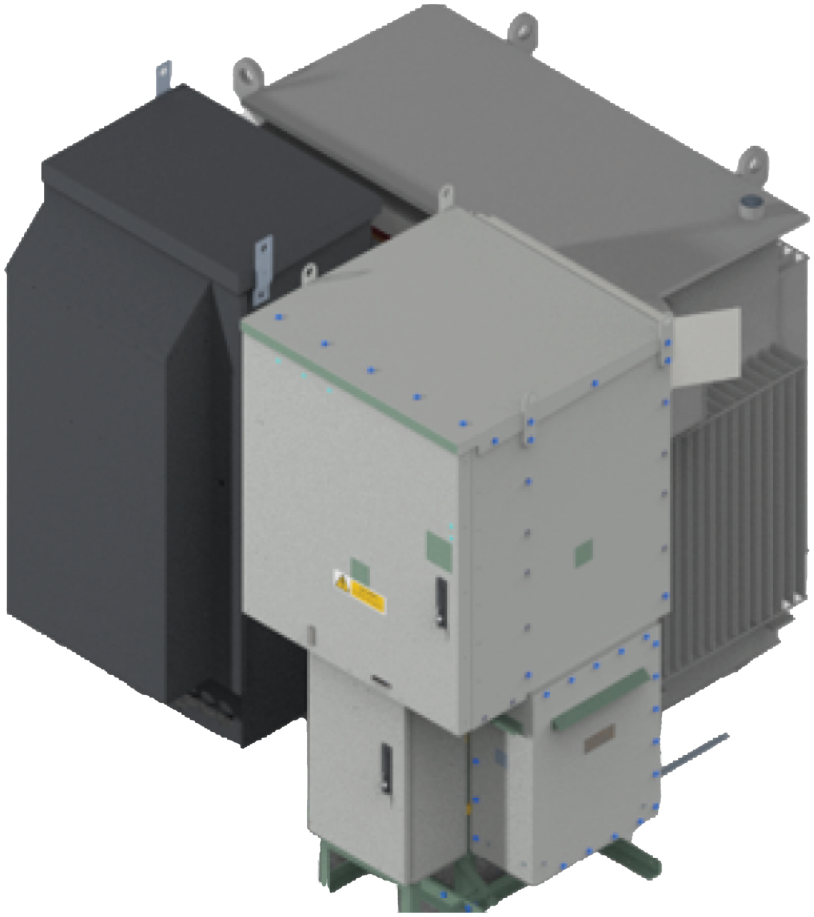

Commissioning

All equipment undergoes rigorous quality and operational testing prior to dispatch. However, it is the user or customer responsibility to help ensure that all required commissioning checks and tests are thoroughly completed on receipt.

Safety Precautions

You are responsible for compliance with all the existing international and national electrical codes concerning protective grounding of any device.

You should also carefully read the safety precautions described below. These instructions must be followed strictly when installing, servicing or repairing electrical equipment.

⚠⚠DANGER

HAZARD OF ELECTRICAL SHOCK, EXPLOSION, OR ARC FLASH

- Only qualified personnel should install this equipment. Such work should be performed only after reading this entire set of instructions.
- Never work alone.
- Turn off all power supplying this equipment before working on or inside it.
- Always use a properly calibrated voltage sensing device to confirm power is off.

Failure to follow these instructions will result in death or serious injury.

⚠WARNING

HAZARD OF INAPPROPRIATE OPERATION

Before performing visual inspections, tests, or maintenance on this equipment:

- Disconnect all sources of electric power.
- Assume that all circuits are live until they have been completely de-energised, tested and tagged.
- Beware of potential hazards, wear personal protective equipment, and carefully inspect the work area for tools and objects that may have been left inside the equipment.

Failure to follow these instructions can result in death, serious injury, or equipment damage.

Checks and Tests

Pressure Check

The manometer installed on the Ringmaster AirSeT unit indicates the pressure inside the unit. There are different zones indicated on the manometer.

Follow the below mentioned cases to understand the pressure checks as follows:

Case 1: Needle in Green Zone



If the needle is in the green zone, the Ringmaster AirSeT unit can be operated normally.

Case 2: Needle in Green Shaded Zone



If the needle is in the green shaded zone, the Ringmaster AirSeT unit can be operated. However, there is an abnormal leakage level, contact the Schneider Electric.

Case 3: Needle in Red Zone

⚠⚠DANGER

HAZARD OF ELECTRIC SHOCK, EXPLOSION, OR ARC FLASH

If the needle is in red zone, do not make any operation on Ringmaster AirSeT unit. Contact the Field Service representative immediately.

Failure to follow these instructions will result in death or serious injury.



If the needle is in the red zone, the Ringmaster AirSeT unit should not be operated. There is an abnormal leakage level, contact the Schneider Electric.

Physical Checks

Follow the below steps to perform the physical checks:

- Remove all packaging and transit labels from the equipment.
- Check the data plate details against the specification.
- Check the operation of the switches/circuit breaker, test access, and various interlocks.

Energizing the Medium Voltage Cables

⚠⚠DANGER

HAZARD OF ELECTRIC SHOCK, EXPLOSION, OR ARC FLASH

Before energizing the cables, the switch/disconnector must be in the OFF position.

Failure to follow these instructions will result in death or serious injury.

Figure 47 - Switch/Disconnector OFF Position

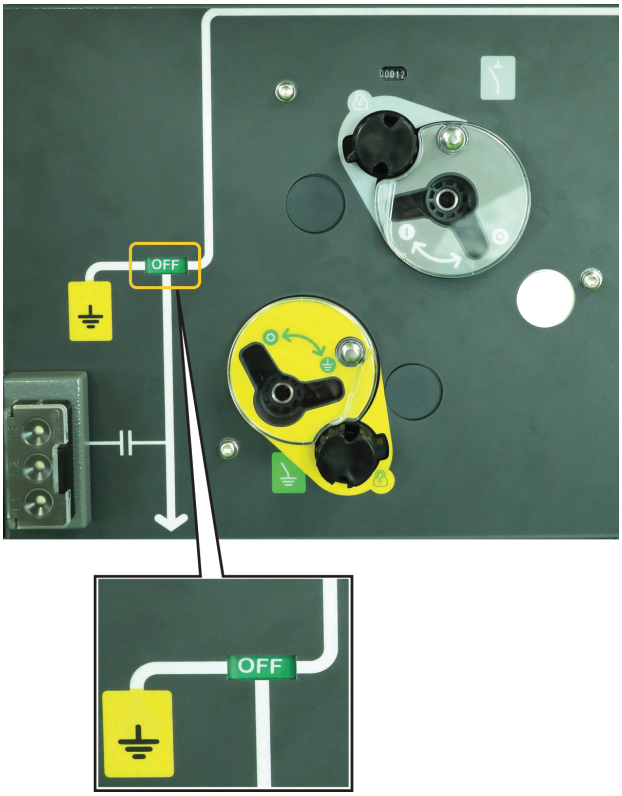

Functional Checks

Follow the below steps to perform the functional checks:

1. Check the conformance of auxiliary switch contacts and remote indication in accordance with the schematic diagram.
2. Confirm the phase relationship of the neon indicator sockets.

   NOTE: All voltages must be applied instantaneously unless otherwise specified.

High Voltage Withstand Test

⚠⚠DANGER

HAZARD OF ELECTRIC SHOCK, EXPLOSION, OR ARC FLASH

- Ensure that all VT primary connections are fully isolated before performing any HV pressure testing on the equipment.
- When applying AC/DC test voltages greater than 12 kV, it is recommended to add supplementary insulation to the bushing to help prevent flashover or insulation failure.
- The bushing sleeve is designed to be used in conjunction with some additional insulation method, such as econ boot or heat shrink termination boots.

Failure to follow these instructions will result in death or serious injury.

Connect the HV test set as shown in the Figure – Connections of Circuit Breaker/ Switch, page 69 and Figure – Schematic of Test Connection, page 68 and carry out the withstand tests in accordance with the Table – Test Voltages, page 68 and Table – Test Connection, page 68.

Figure 48 - High Voltage Connection



Figure 49 - Schematic of Test Connection

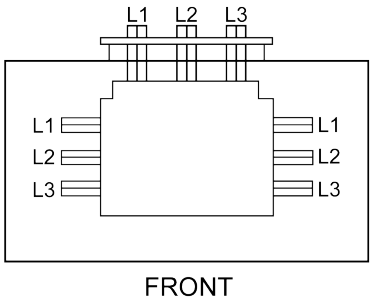

Table 12 - Test Voltages

Rated Voltage (kV)	AC Test Voltage (kV)	Frequency (Hz)	Duration (minutes)	DC Test Voltage Current Practice (kV)
3.6	8	50	1 (AC) 15 (DC)	7.5
7.2	16	50	1 (AC) 15 (DC)	15
12	23	50	1 (AC) 15 (DC)	25

Table 13 - Test Connection

Test Number	Ring Switch 1	Ring Switch 2	Circuit Breaker	Live Terminals	Earthed Terminals
1	Closed	Closed	Closed	L1, L3	L2, Frame
2	Closed	Closed	Closed	L2	L1, L3, Frame
3	Closed	Closed	Open	L1, L2, L3	L1, L2, L3, Frame
4	Closed	Closed	Open	L1, L2, L3	L1, L2, L3, Frame
5	Open	Open	Closed	L1, L2, L3	L1, L2, L3, L1, L2, L3, Frame
6	Open	Open	Closed	L1, L2, L3, L1, L2, L3	L1, L2, L3, Frame

Figure 50 - Connections of Circuit Breaker/Switch

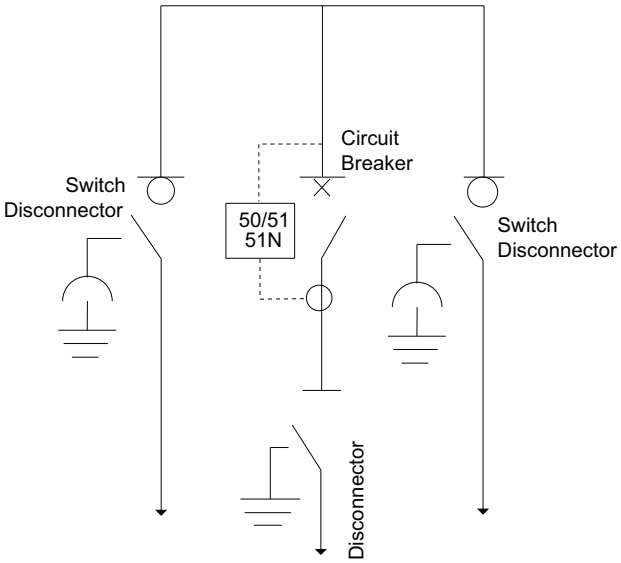

Voltage Presence

Unit with VDIS

⚠⚠DANGER

HAZARD OF ELECTRIC SHOCK, EXPLOSION, OR ARC FLASH

- You must use the VDIS unit to detect and indicate the presence or absence of operating voltage.
- You must not use the VDIS unit to distinguish between voltage not present (that is U < 10% of nominal voltage) and dead circuit state (that is U = 0 V).

Failure to follow these instructions will result in death or serious injury.

The VDIS unit is an integrated, self-powered voltage detecting and indicating system.

The VDIS unit is integrated into Schneider Electric high-voltage equipment, flush mountable, and designed according to IEC 62271-213: 2021 standard. Fitted with a three LED display, it detects the operating voltage presence/absence on the main circuit.

The VDIS unit receives the information through a capacitive sensor installed inside the high-voltage equipment.

The range of VDIS units consists of three versions:

- **No Voltage Output (VO)**: voltage presence detection and interface to phase concordance units.
- **VO FlairDIN**: voltage presence detection, interface to phase concordance units and voltage output cable connection to fault passage indicators. The VO FlairDIN cable is connected to the input of the Flair 2xD or VD23 ranges.
- **VO T300**: voltage presence detection, interface to phase concordance units and voltage output cable connection to SC150 for voltage measurement. The VO T300 cable is connected to the VDIS voltage adapter, which is linked to the Easergy SC150 module of T300 via an Ethernet cable.

The VDIS unit has three main functions:

- Visual indication of MV operating voltage presence/absence.
- Phase concordance output.

- Voltage Output (VDIS-VO only).

Figure 51 - VDIS



NOTE: If the ambient lighting is particularly bright, it may be necessary to enhance visibility by shielding or shading the indication display.

Phase Concordance Unit

⚠WARNING

HAZARD OF INCORRECT OPERATING CONDITIONS

Disable any automation which uses the voltage presence signal before carrying out the phase concordance test.

Failure to follow these instructions can result in death, serious injury, or equipment damage.

NOTICE

HAZARD OF INCORRECT OPERATING CONDITIONS

- After completing phase concordance testing, ensure the VDIS cover is reinstalled and securely clicked into position.
- Ensure that each of the three cables is correctly connected to the corresponding phase of the Ringmaster AirSeT unit.
- Phase concordance testing must be performed every time a cable is connected to the unit.

Failure to follow these instructions can result in equipment damage.

A phase concordance unit checks if the phases of two input units on the same panel match before turning on the switches. It help ensures that each of the three cables connects to the correct phase. The unit must follow the IEC 62271-215:2021 standard.

Check Before Phase Concordance Test

Check that VDIS versions on each switch function allow the use of the phase concordance unit, refer to the below Table – Check Before Phase Concordance Test, page 71.

⚠WARNING

HAZARD OF INCORRECT OPERATING CONDITIONS

Ensure phase concordance does not work between an I switch function and a Q earthing switch function.

Failure to follow these instructions can result in death, serious injury, or equipment damage.

I switch function: Operation-independent opening or closing by lever or motor when operated electrically, an operation requires less than 10 s.

Q earthing switch function: Operation-independent opening or closing by lever. Operating energy is provided by a compressed spring which, when released, causes the contacts to open or close.

Table 14 - Check Before Phase Concordance Test

Test	Result	Action
Check that the three indicator lights of each VDIS are on. 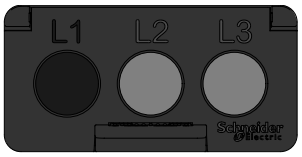	The three indicator lights of each VDIS are on.	The two functional units are energized, the VDIS units are operating and the check can continue.
	The three indicator lights of one VDIS are off. The functional unit is not energized or the VDIS is malfunctioning.	Apply power to the functional unit. If VDIS remains unlit, replace it. If necessary, update VDIS so that both are the same version
	One or two light indicators unlit.	The VDIS is inoperative, replace it. If necessary, update VDIS so that both are the same version.
Checking the phase concordance unit.	The phase concordance unit is defective.	Check the phase concordance unit. Refer to the Phase Concordance Unit User Manual.

A phase concordance unit cannot be used to test VPIS and VDIS. It will result in an indication of phase not in concordance.

Table 15 - Compatibility Test

Functional unit 1	Functional unit 2	Compatibility result	Corrective actions
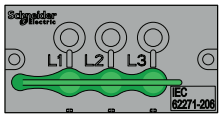	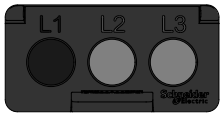	Not OK	Upgrade unit to VDIS
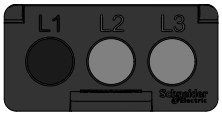	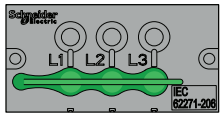	Not OK	Upgrade unit to VDIS
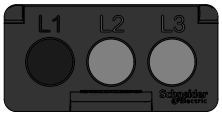	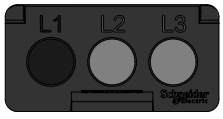	OK	–

Phase Concordance Test

When all three indicator LEDs on both VDIS units are lit, it means the phase concordance unit is working correctly and the phase test can be carried out.

The phase concordance unit complying with IEC 62271-215: 2021 standard should work well. Taking phase concordance unit with phase concordance light as shown in below Table – Phase Concordance Test, page 72.

- Phase concordance: the phase concordance light remains unlit.
- No phase concordance: the phase concordance unit light is lit.

Table 16 - Phase Concordance Test

Phase Concordance Test		Functional unit 2			Conclusion regarding phase concordance
		L1	L2	L3	
Functional unit 1	L1	○	☀	☀	Connection is satisfactory.
	L2	☀	○	☀	
	L3	☀	☀	○	
Functional unit 1	L1	☀	○	☀	Reverse the MV cables connected to L1 and L2 on one of the two functional units.
	L2	○	☀	☀	
	L3	☀	☀	○	
Functional unit 1	L1	○	☀	☀	Reverse the MV cables connected to L2 and L3 on one of the two functional units.
	L2	☀	☀	○	
	L3	☀	○	☀	
Functional unit 1	L1	☀	☀	○	Reverse the MV cables connected to L1 and L3 on one of the two functional units.
	L2	☀	○	☀	
	L3	○	☀	☀	
Functional unit 1	L1	☀	○	☀	Change the position of each MV cable on one of the two functional units.
	L2	☀	☀	○	
	L3	○	☀	☀	

Table 16 - Phase Concordance Test (Continued)

Phase Concordance Test		Functional unit 2			Conclusion regarding phase concordance
		L1	L2	L3	
Functional unit 1	L1	☀	☀	○	Change the position of each MV cable on one of the two functional units.
	L2	○	☀	☀	
	L3	☀	○	☀	

☀ Phase concordance unit LED lights

○ LED unlit

Operation

⚠⚠DANGER

HAZARD OF ELECTRIC SHOCK, EXPLOSION, OR ARC FLASH

Ensure that the circuit breaker connected to the transformer must only be operated when the transformer is in a no load condition.

Failure to follow these instructions will result in death or serious injury.

The Ringmaster AirSeT circuit breaker is rated for fault breaking in accordance with IEC 62271-100 and for load current breaking in accordance with IEC 62271-103. However, if inductive loads, including loaded transformers, motors or shunt reactors are to be switched with the Ringmaster AirSeT circuit breaker, then it is recommended that overvoltage protection should be applied to help protect the load against switching overvoltages.

It is recommended that transformers should be switched in a no-load condition to minimize the magnitude of switching overvoltages which could potentially damage the transformer primary winding.

For more information on dimensioning and specifying overvoltage protection contact Schneider Electric.

Prior to Energizing

It is recommended that prior to energizing the unit, all protection devices are checked to help ensure they are set correctly. For TLF units, help ensure fuses are fitted. VIP protection relays must be set in accordance with the results of a protection co-ordination study.

Essential Checks

⚠⚠DANGER

HAZARD OF ELECTRIC SHOCK, EXPLOSION, OR ARC FLASH

- Do not operate this equipment if the needle is in the red zone or at zero, refer to pressure check, page 65.
- Isolate and earth the equipment before removing any external covers.
- The option of VDIS must be used as indication only. It should not be used as absolute proof of isolation.
- Never earth a live cable which is energized from a remote end.
- Check voltage of the respective CB/switch before operating the unit.
- Prior to operating the CB/switch, ensure the manometer needle is in green zone.

Failure to follow these instructions will result in death or serious injury.

⚠WARNING

HAZARD OF INAPPROPRIATE OPERATION

- Before energizing the unit, ensure all protection devices are correctly set.
- Ensure that fuses are fitted for TLF units.
- VIP units must be set in accordance with the results of a protection co-ordination study.
- Short the current transformers (T300 and earth fault flow indicator) that are not going to be used during commissioning or during service.

Failure to follow these instructions can result in death, serious injury, or equipment damage.

Figure 52 - Manometer



Opening and Closing the Ringmaster AirSeT Main Door

⚠CAUTION

HAZARD OF INAPPROPRIATE OPERATION OF DOOR HANDLE

Ensure the handle is rotated in accordance with the operating instructions provided below.

Failure to follow these instructions can result in injury or equipment damage.

Opening the Main Door:

1. Insert the key into the handle lock to unlock the door handle.
2. Rotate the handle 90° anti-clockwise to open the door, refer to the below Figure – Opening and Closing the Ringmaster AirSeT Main Door, page 76.

Closing the Main Door:

1. Make sure that the handle is in the door open position.
2. Press the door firmly against the fascia, then rotate the handle 90° clockwise to help secure it, refer to the below Figure – Opening and Closing the Ringmaster AirSeT Main Door, page 76.

Figure 53 - Opening and Closing the Ringmaster AirSeT Main Door



Door Stopper

Locking the door stopper

Door stopper will lock once the main door is opened at desired angle and the door stopper locks itself by gravity, refer to Figure – Door Stopper, page 77.

Unlocking the door stopper:

Lift the door stopper by hand to unlock it and close the main door, refer to Figure – Door Stopper, page 77.

Figure 54 - Door Stopper



Operating Handle

⚠CAUTION

HAZARD OF INAPPROPRIATE OPERATION

- The operating handle must only be operated on the switches, when the front plate is installed.
- Only use the genuine operating handle provided by Schneider Electric to operate the switch manually.
- The operating handle must be completely inserted before operating.

Failure to follow these instructions can result in injury or equipment damage.

The operating handle is a mandatory accessory for the Ringmaster AirSeT unit and for operating the switch/disconnector mechanism and the earthing switch.

Figure 55 - Operating Handle

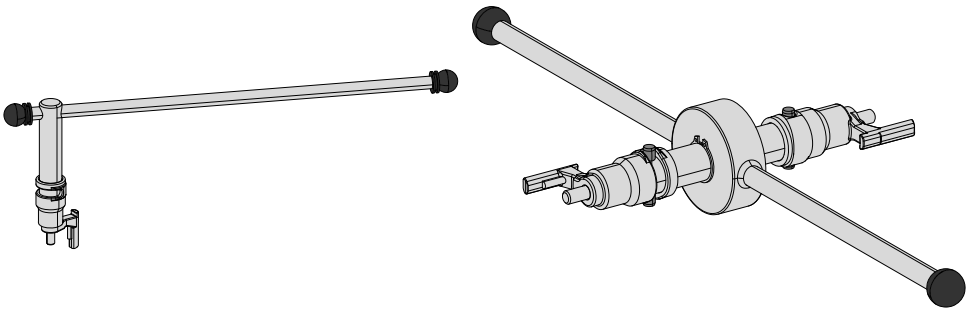

NOTE: The operating handle is supplied with the Ringmaster AirSeT unit.

Circuit Breaker Mechanism

The VCB operation consists of:

- Disconnector and earthing switch (Disconnector)
- Vacuum interrupters of VCB

Figure 56 - Circuit Breaker Mechanism

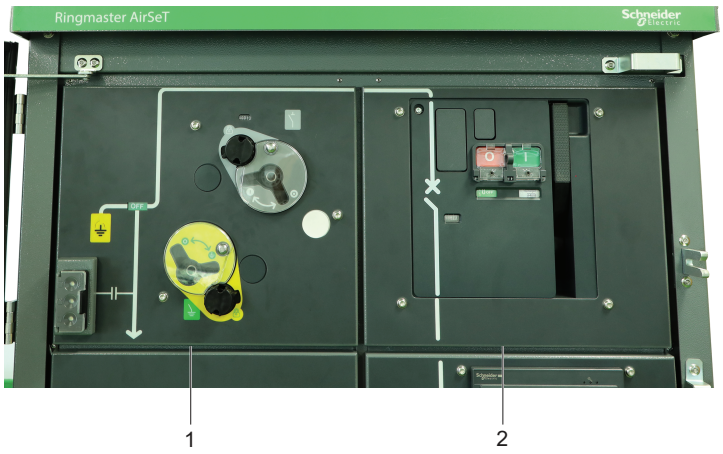

1 Disconnector

2 VCB

NOTE: The Ringmaster AirSeT unit is designed with mechanical functional interlocks between the VCB and the switch/disconnector mechanism to help ensure safe operation.

Figure 57 - Operating Interface of VCB

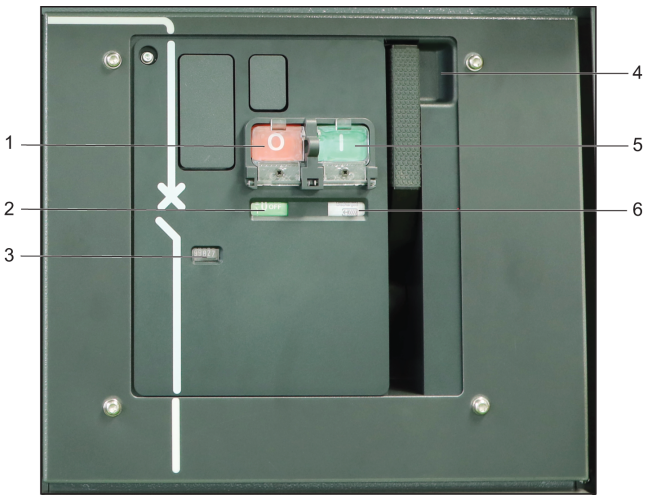

1	Opening Push Button	4	Spring Charging Crank
2	Main Contact Position Indicator	5	Closing Push Button
3	Mechanical Counter	6	Spring Charged Indicator

Switch/Disconnector Mechanism

⚠WARNING

HAZARD OF INAPPROPRIATE OPERATION

Ensure to rotate the shutter knob as per the operating instructions below.

Failure to follow these instructions can result in death, serious injury, or equipment damage.

Before operating the mechanism, observe the position indicators, refer to Figure – Earth ON position, page 79, Figure – Earth OFF position, page 79 and Figure – Mains ON position, page 79. The position of the indicator reflects the current state of the switch/disconnector mechanism.

Figure 58 - Earth ON position

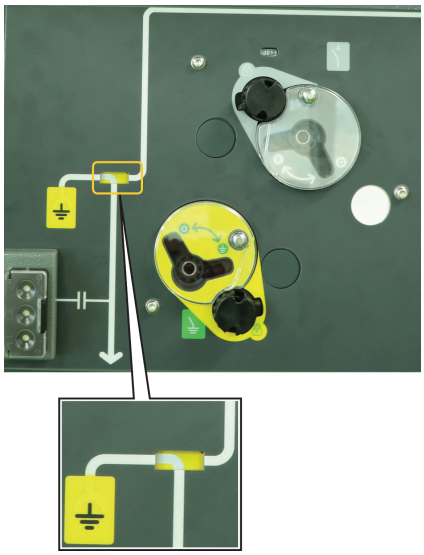

Figure 59 - Earth OFF position

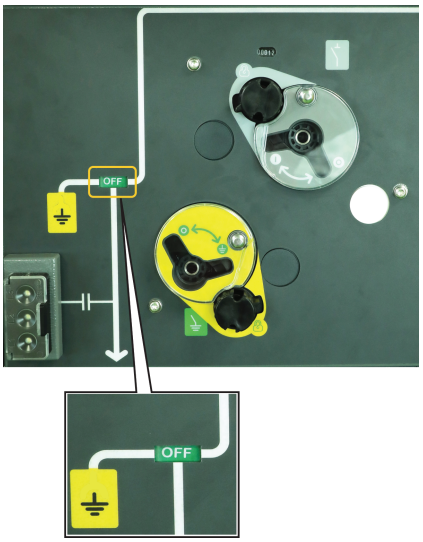

Figure 60 - Mains ON position

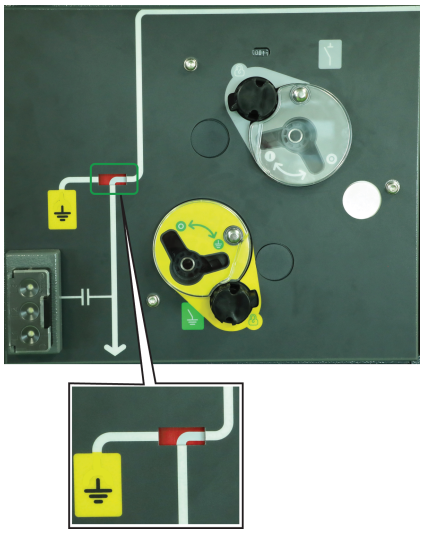

Figure 61 - Inserting the Operating Handle



Follow the below steps to insert the operating handle into the switch/disconnector mechanism:

1. Rotate the shutter knob (1) in the clockwise direction and hold it in its position.
2. While still holding the shutter knob (1), insert the operating handle (2) into the switch/disconnector mechanism as shown in the Figure – Inserting the Operating Handle, page 79.

3. Check that the operating handle (2) is fully inserted into the mechanism before operating it.

Switch/Disconnector Mechanism OFF to Mains ON and Mains ON to OFF

The detailed operation of switch/disconnector mechanism operation from OFF to Mains ON and Mains ON to OFF is as follows:

1. Rotate the shutter knob in the clockwise direction and hold it in its position.
2. While still holding the shutter knob, insert the operating handle into the switch/disconnector mechanism.
3. Check that the operating handle is fully inserted into the switch/disconnector mechanism before operating it.
4. After the inserting the operating handle fully into the switch/disconnector mechanism, hold the operating handle at both ends and rotate the operating handle in clockwise direction, refer to the Figure – OFF to Mains ON, page 80.

⚠WARNING

HAZARD OF UNINTENTED EQUIPMENT OPERATION

Do not leave handle operation in between OFF to ON/ON to OFF as the spring will discharge and handle will recoil.

Failure to follow these instructions can result in death, serious injury, or equipment damage.

Figure 62 - OFF to Mains ON



5. Once the operation is completed, the position indicator will change from OFF to Mains ON position, indicating the switch/disconnector blades are connected to the mains.
6. Once in Mains ON position, the Earth ON of the earth switch mechanism cannot be operated as the interlock blocks the access of operating handle to the earth switch Earth ON mechanism.
7. Rotate the operating handle in counterclockwise direction to operate the switch/disconnector mechanism from Mains ON to OFF position.

Switch/Disconnector Mechanism OFF to Earth ON and Earth ON to OFF

The detailed operation of switch/disconnector mechanism operation from OFF to Earth ON and Earth ON to OFF is as follows:

1. Rotate the shutter knob in the clockwise direction and hold it in its position.
2. While still holding the shutter knob, insert the operating handle into the earth switch mechanism.
3. Check that the operating handle is fully inserted into the earth switch mechanism before operating it.
4. After the inserting the operating handle fully into the earth switch mechanism, hold the operating handle at both ends and rotate the operating handle in clockwise direction, refer to the Figure – OFF to Earth ON, page 81.

> **⚠WARNING**
>
> **HAZARD OF UNINTENTED EQUIPMENT OPERATION5**
>
> Do not leave handle operation in between OFF to ON/ON to OFF as the spring will discharge and handle will recoil.
>
> **Failure to follow these instructions can result in death, serious injury, or equipment damage.**

Figure 63 - OFF to Earth ON



5. Once the operation is completed, the position indicator will change from OFF to Earth ON position, indicating the earth switch blades are connected to the Earth.
6. Once in Earth ON position, the Mains ON part of the switch/disconnector mechanism cannot be operated as the interlock blocks the access of the operating handle to the switch/disconnector Mains ON mechanism.
7. Rotate the handle in a counterclockwise direction to operate the earth switch mechanism from Earth ON to OFF position.

Manual Spring Charging of VCB

Follow the below steps for manual spring charging:

1. Pull down the spring charging handle until the VCB is fully charged.
2. After the spring is charged, VCB is ready to be closed.
3. To close the VCB, press the closing push button.
4. To open the VCB, press the opening push button.
5. The disconnector mechanism can be operated only when VCB is in OFF position.

   NOTE: There is an interlock between VCB and disconnector which helps to prevent the operation of disconnector when the VCB is in ON position.

Figure 64 - Manual Spring Charging



Motorized Operation of Ring Switch

The Ringmaster AirSeT unit has provision to motorization capability for both RS1 and RS2.

NOTE: For the purpose of demo, the motorization provision is shown only for RS1, the operation will be similar for RS2.

Follow the below steps for motorized operation of ring switch:

1. Make sure that the ring switch is in OFF position and the green motor selector is in (M) position.

Figure 65 - Ring Switch is in OFF position



2. Connect a 24 Vdc supply for motorization in LV cabinet.

3. Input the close and open command to the terminal block in LV cabinet as per the below Tables – RS1 Terminals, page 84 and RS2 Terminals, page 84.

Figure 66 - Ring Switch Terminals

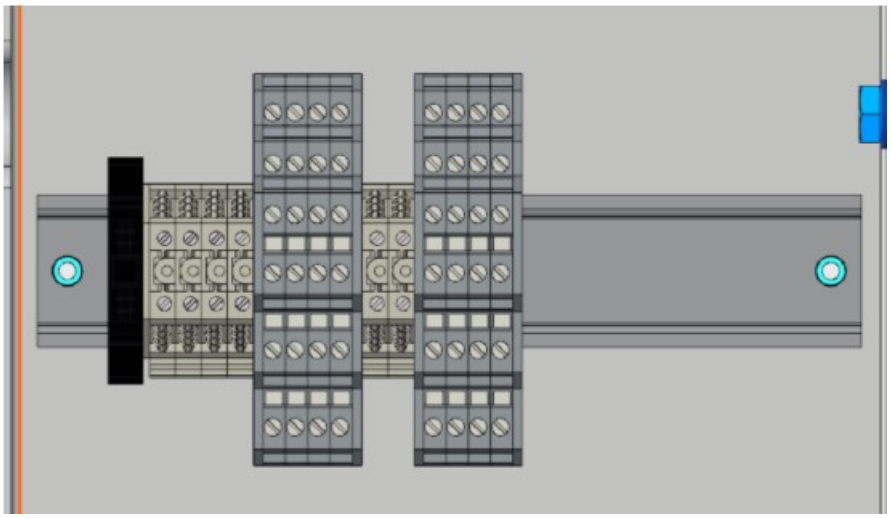

Table 17 - RS1 Terminals

RS1 Terminals											
38	39	40	41	14-15	17-19	23-24	14-16	17-18	23-25	20-21	20-22
+	-	Close	Open	Switch Open			Switch Close			ES Open	ES Close
24 Vdc motor supply		Motor control		RS1 Indications							

Table 18 - RS2 Terminals

RS2 Terminals											
38	39	42	43	26-27	29-31	35-36	26-28	29-30	35-37	32-33	32-34
+	-	Close	Open	Switch Open			Switch Close			ES Open	ES Close
24 Vdc motor supply		Motor control		RS2 Indications							

Manual Operation of Motorized Ring Switch

The motorized ring switch can also be manually operated as follows:

1. Make sure that the ring switch is in OFF position and the green motor selector is ON Motor (M) position.

Figure 67 - Ring Switch is in OFF position



2. Rotate the shutter knob in the clockwise direction.

Figure 68 - Rotating the Green Motor Selector



3. While still holding the shutter knob, push and rotate the green motor selector in anti-clockwise direction to non-motorized position, refer to the Figure – Green Motor Selector in Non-motorized Position, page 86.

Figure 69 - Green Motor Selector in Non-motorized Position



4. While still holding the shutter knob, take out the green motor selector to gain access for operating handle.

Figure 70 - Removal of Green Motor Selector



5.

⚠CAUTION

HAZARD OF INAPPROPRIATE OPERATION

The padlock should be locked only when the green motor selector is removed and the ring switch is in OFF condition.

Failure to follow these instructions can result in injury or equipment damage.

Figure 71 - Padlock on Ring Switch

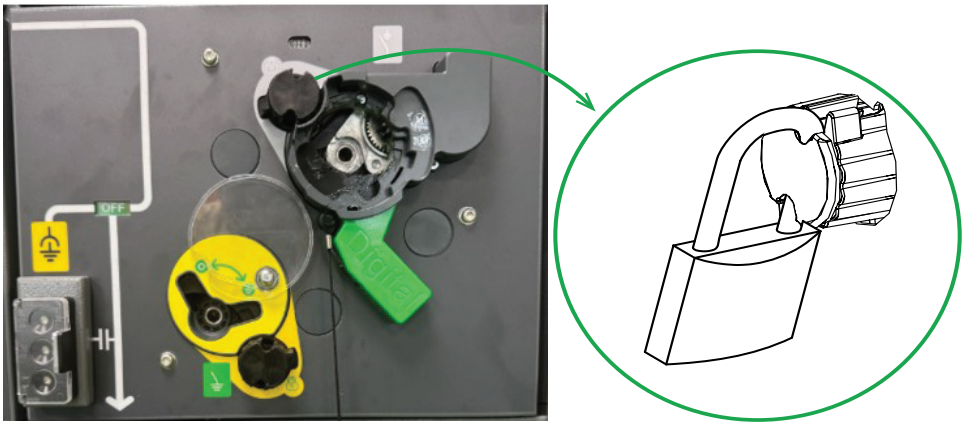

Mechanical Interlocks

Ring Switch Earth Interlock

Figure 72 - Overview of Ring Switch Earth Interlock

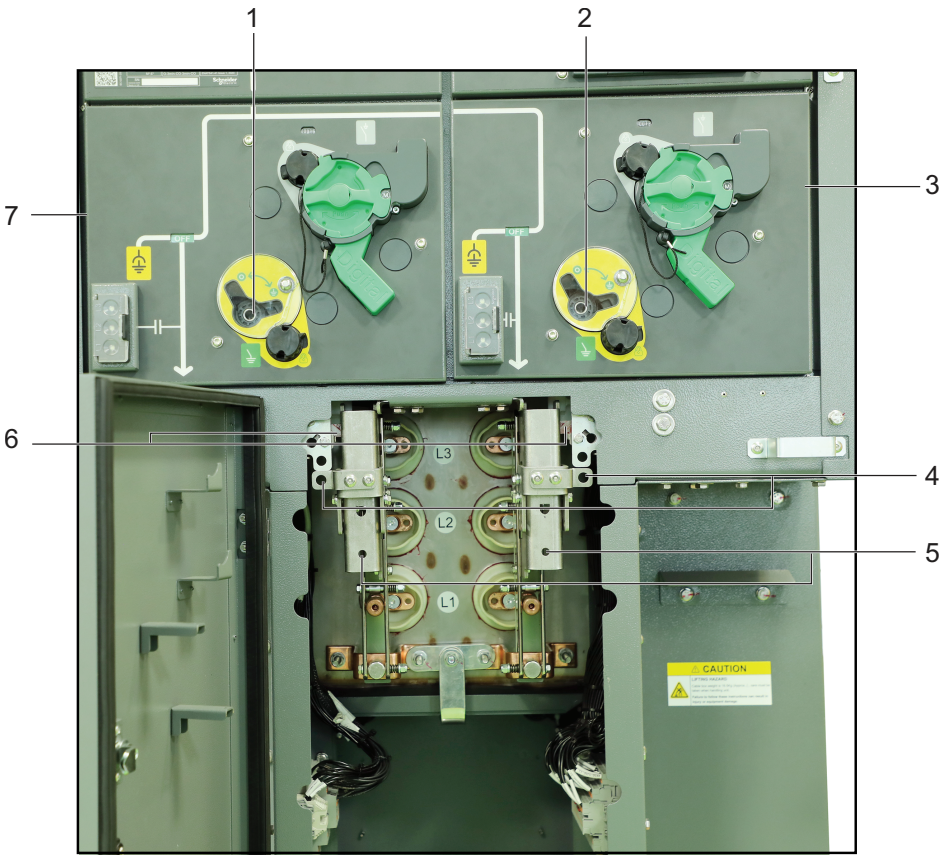

1	Switch Earth Operating Handle Insertion (RS1) Porthole	5	Switch Cable Test (SCT) Access Bar
2	Switch Earth Operating Handle Insertion (RS2) Porthole	6	Shoot Bolt
3	RS2 Switch Mechanism	7	RS1 Switch Mechanism
4	Option for Padlock		

RS1 Switch Mechanism – OFF to Earth ON and Earth ON to OFF

The detailed operation of RS1 switch mechanism operation from OFF to Earth ON and Earth ON to OFF is as follows:

NOTE: RS2 switch mechanism operation is similar to RS1 switch mechanism.

1. Rotate the shutter knob in the clockwise direction and hold it in its position.

Figure 73 - Inserting the Operating Handle



2. While still holding the shutter knob, insert the operating handle into the RS1 switch mechanism.
3. Check that the operating handle is fully inserted into the RS1 switch mechanism before operating it.

4. After inserting the operating handle fully into the earth switch mechanism, hold the operating handle at both ends and rotate the operating handle in clockwise direction.

> **⚠WARNING**
>
> **HAZARD OF UNEXPECTED EQUIPMENT OPERATION**
>
> Do not leave handle operation in between as the spring will discharge and handle will recoil.
>
> **Failure to follow these instructions can result in death, serious injury, or equipment damage.**

Figure 74 - RS1 Switch Mechanism — OFF to Earth ON



5. Once the operation is completed, the position indicator will change from OFF to Earth ON position, indicating the RS1 switch mechanism is connected to the Earth.
6. Once the RS1 Earth is in ON position, the Mains ON part of the switch mechanism cannot be operated as the interlock blocks the access of the operating handle to the switch Mains ON mechanism.
7. Rotate the operating handle counterclockwise to operate the RS1 switch mechanism from Earth ON to OFF.

SCT Operation Instruction – RS1

1. Make sure that RS1 earth switch is in ON (close) position and remove the operating handle.

Figure 75 - RS1 Earth ON Position



2. Open the LV door and take the RS1 test access key.
3. Insert the test access key (1) into earth ON porthole and make sure that test access key (1) is engaged with shoot bolt (2) slot.

Figure 76 - Installing the Test Access Key

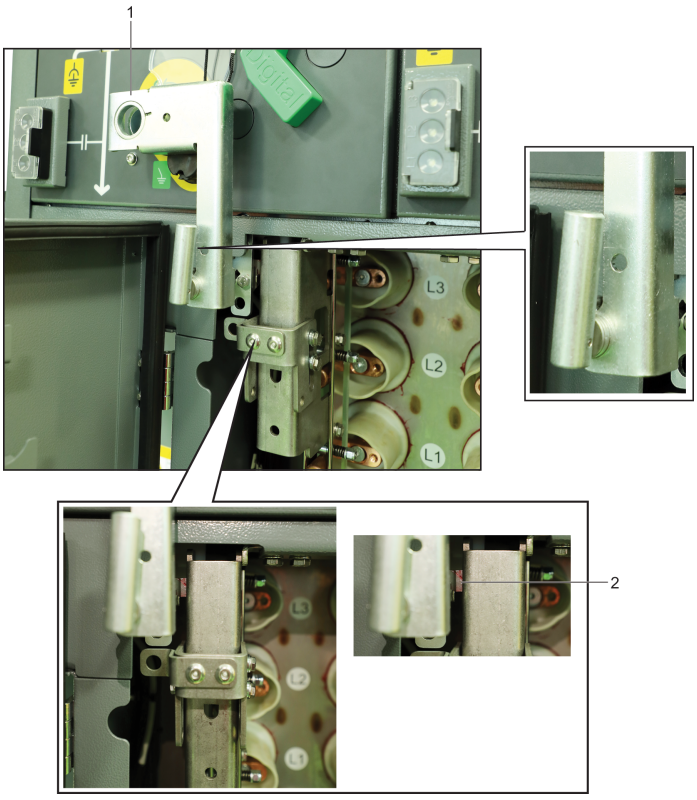

4. Rotate the lever of the test access key in anti-clockwise direction (90°) to unlock the shoot bolt (2) for SCT access bar, and make sure that the shoot bolt (2) disengages from the SCT access bar.

Figure 77 - Disengaging the Shoot Bolt

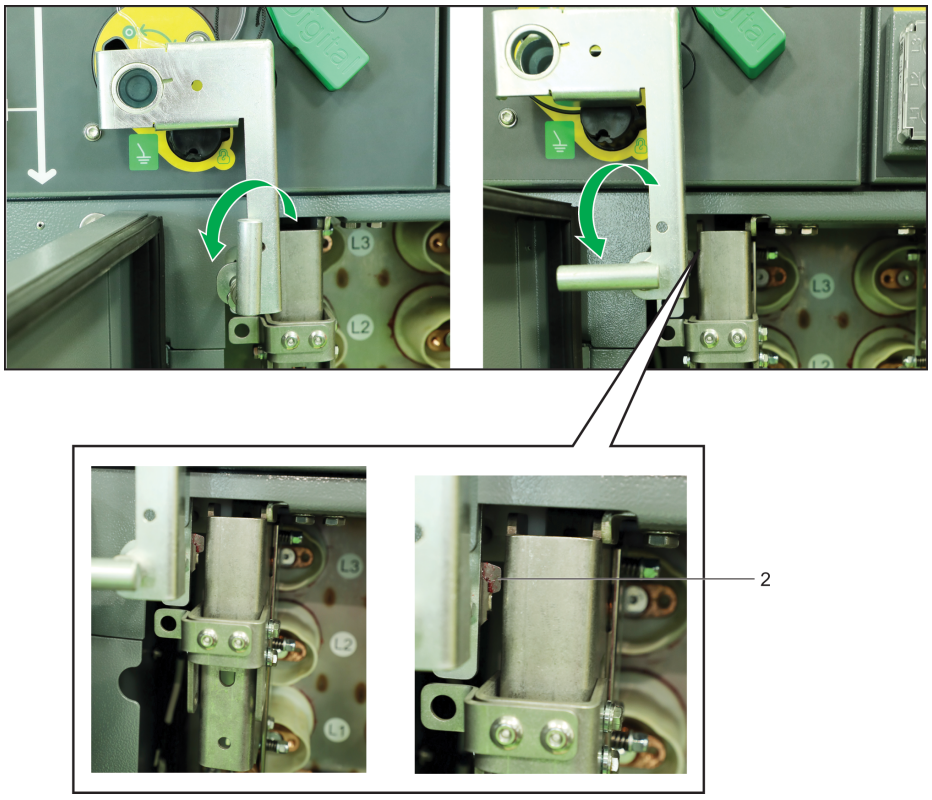

5. Slide upward the bracket A (3) and insert the operating handle into the bracket A holes and pull down the bracket A (3) to lock the operating handle.

Figure 78 - Inserting the Operating Handle

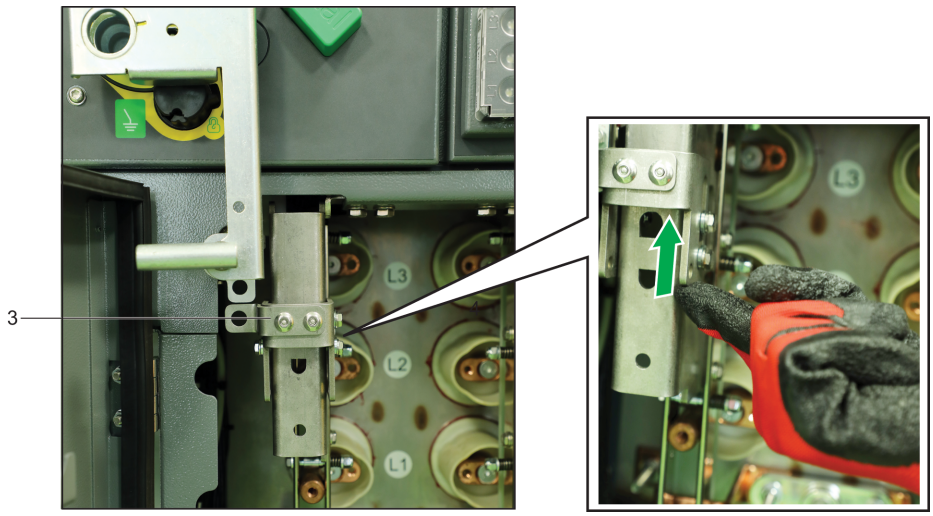

6. Hold the operating handle and pull down the SCT access bar.

Figure 79 - Disengaging the SCT Access Bar

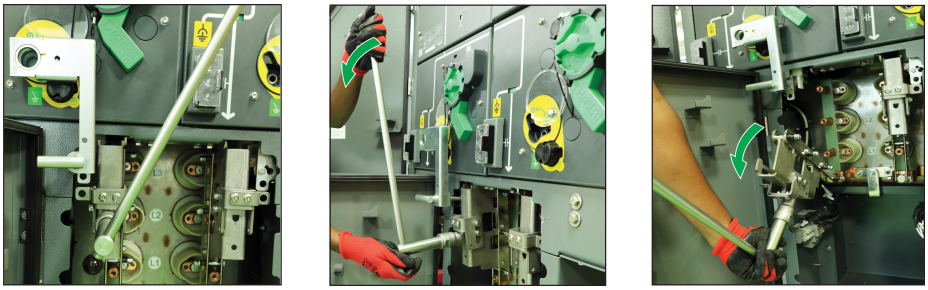

7. Pull down the SCT access bar and remove the operating handle by sliding the bracket A up.

   NOTE: The test access is ready for cable testing.

8. Slide upward the bracket A and insert the operating handle inside the bracket A holes and pull down the bracket A. Refer step 5.
9. Hold the operating handle and push upward to close the SCT access bar.

Figure 80 - Engaging the SCT Access Bar

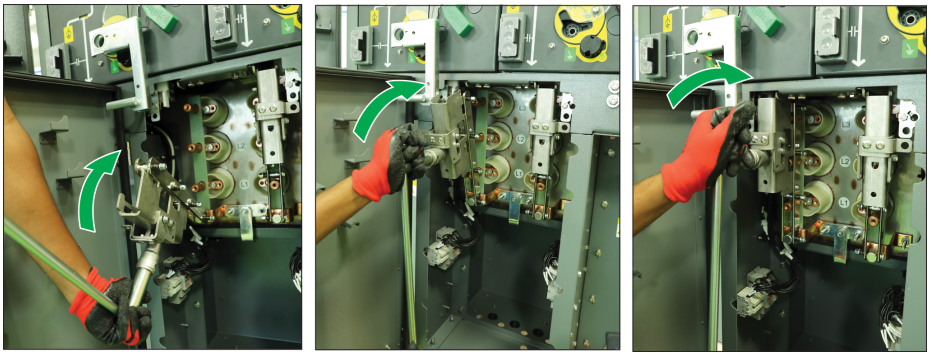

10. Slide the bracket A (3) in upward direction and remove the operating handle.

Figure 81 - Removal of Operating Handle

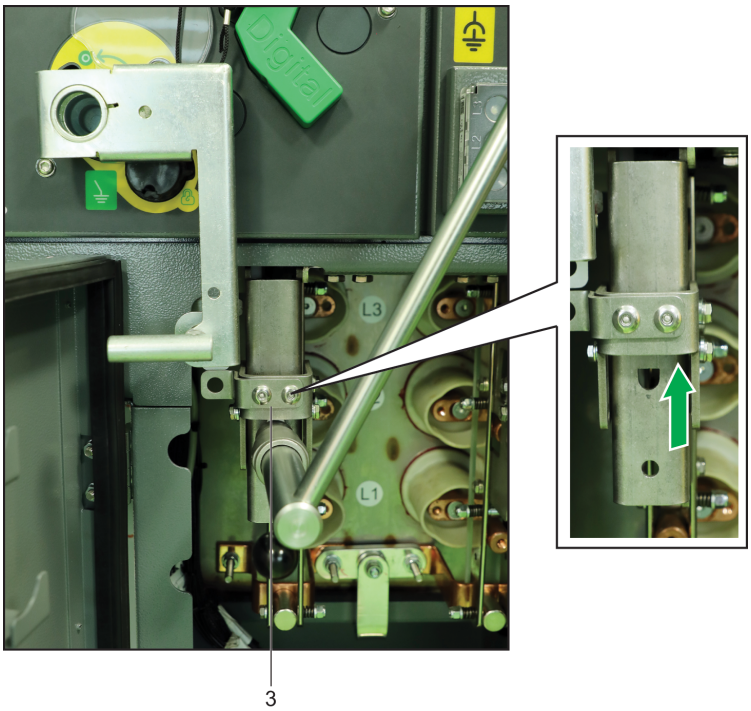

11. Engaging the shoot bolt with the SCT access bar as follows:

⚠⚠DANGER

HAZARD OF ELECTRIC SHOCK, EXPLOSION, OR ARC FLASH

Make sure that shoot bolt is engage/locked position with the SCT access bar slot before removing the test access key.

Failure to follow these instructions will result in death or serious injury.

Once the SCT access bar is closed, rotate the lever of the test access key in clockwise direction (90°) and lock the shoot bolt to SCT access bar slot and then remove the test access key.

Figure 82 - Engaging the Shoot Bolt

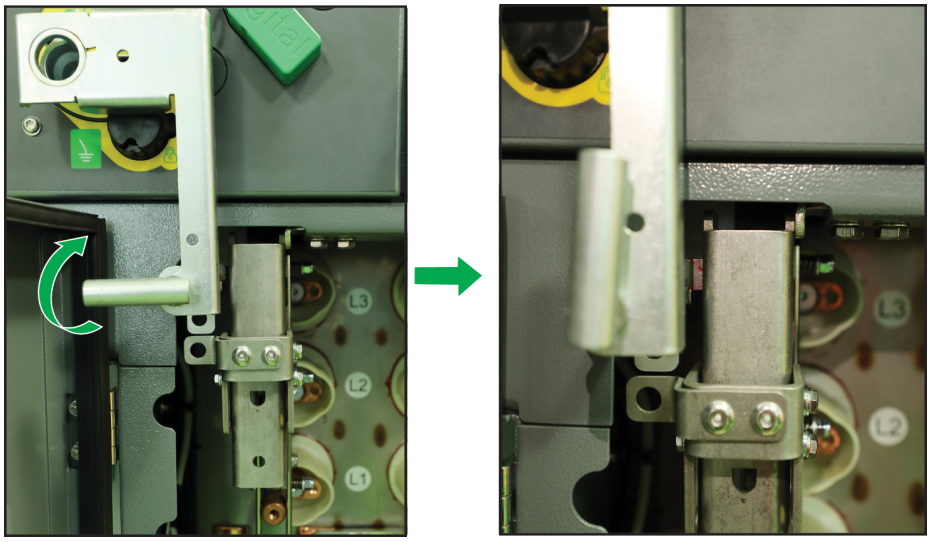

SCT Operation Instruction – RS2

1. Make sure that RS2 earth is in ON (close) position and remove the operating handle.

Figure 83 - RS2 Earth ON (Close) Position



2. Open the LV door and take the RS2 test access key.
3. Insert the test access key (1) into earth ON porthole and make sure that test access key (1) is engaged with shoot bolt (2) slot.

Figure 84 - Installing the Test Access Key

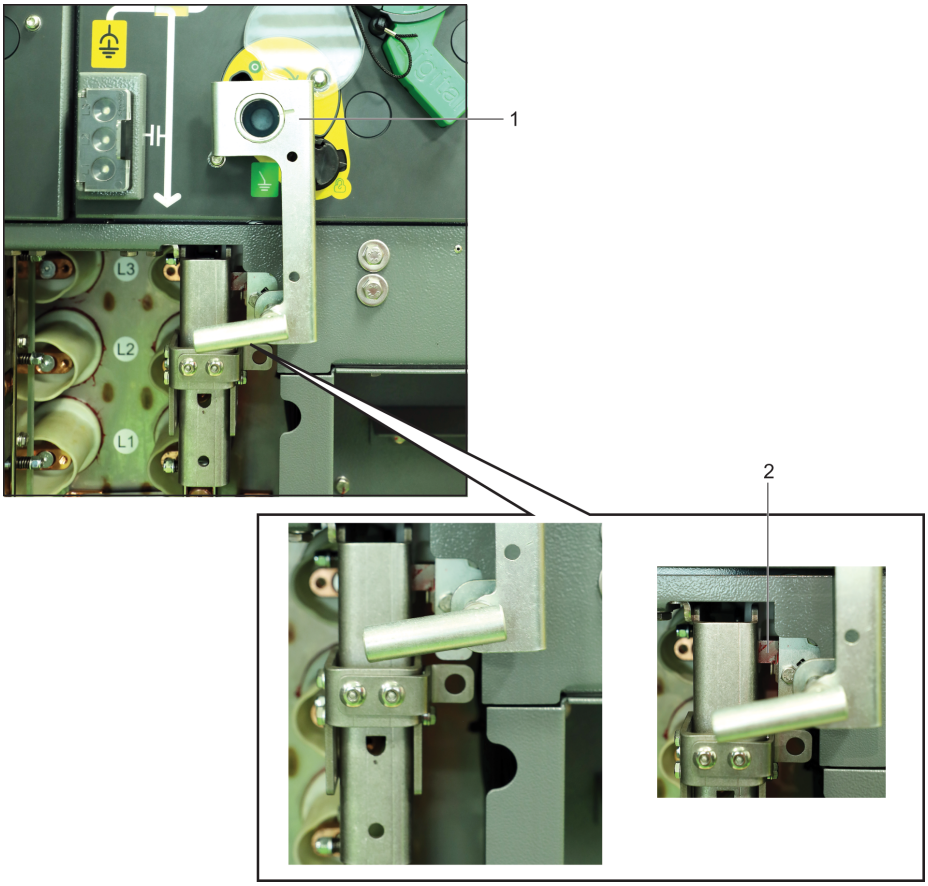

4. Rotate the lever of the test access key in clockwise direction (90°) to unlock the shoot bolt (2) for SCT access bar, and make sure that the shoot bolt (2) disengages from the SCT access bar.

Figure 85 - Disengaging the Shoot Bolt

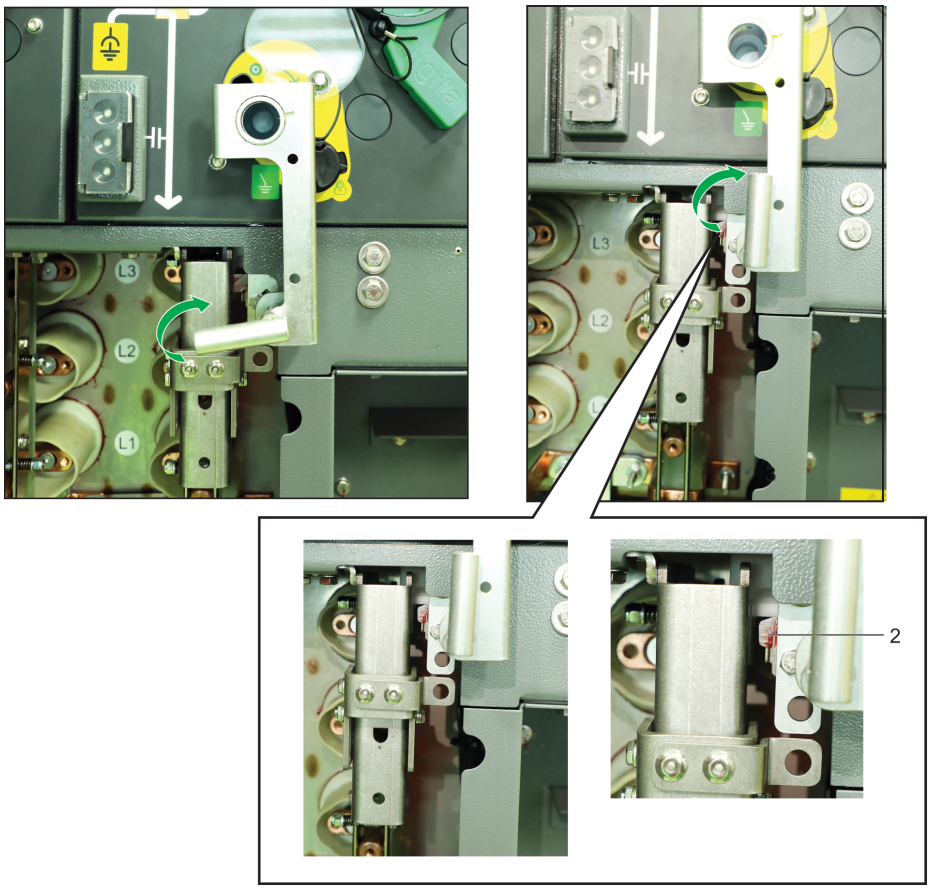

5. Slide upward the bracket B (3) and insert the operating handle into the bracket B holes and pull down the bracket B (3) to lock the operating handle.

Figure 86 - Inserting the Operating Handle

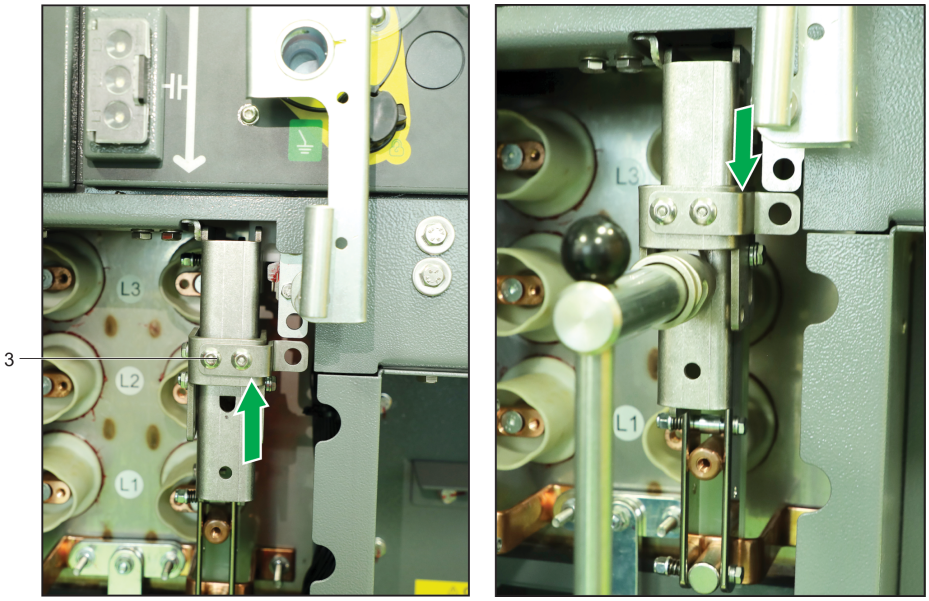

6. Hold the operating handle and pull down the SCT access bar.

Figure 87 - Disengaging the SCT Access Bar



7. Pull down the SCT access bar and remove the operating handle by sliding the bracket B up.

   NOTE: The test access is ready for cable testing.

8. Slide upward the bracket B and insert the operating handle inside the bracket B holes and pull down the bracket B. Refer step 5.
9. Hold the operating handle and push upward to close the SCT access bar.

Figure 88 - Engaging the SCT Access Bar





10. Slide the bracket B in upward direction and remove the operating handle.

Figure 89 - Removal of Operating Handle

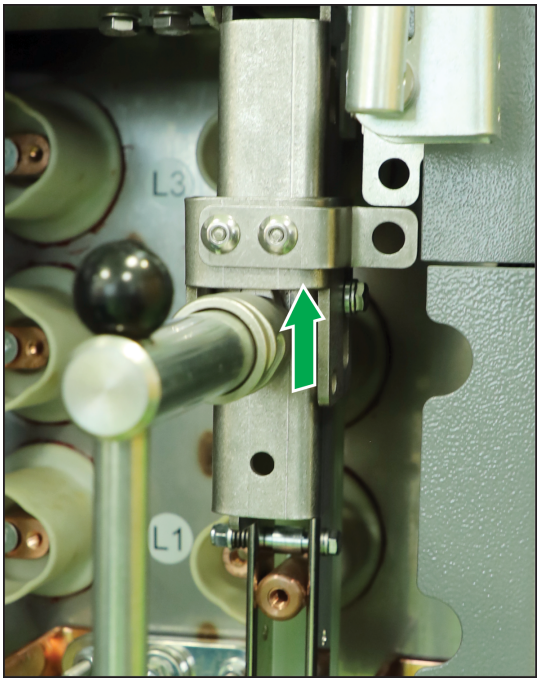

11. Engaging the shoot bolt with the SCT access bar as follows:

⚠⚠DANGER

HAZARD OF ELECTRIC SHOCK, EXPLOSION, OR ARC FLASH

Make sure that shoot bolt is engaged/locked position with the SCT access bar slot before removing the test access key.

Failure to follow these instructions will result in death or serious injury.

Once the SCT access bar is closed, rotate the lever of the test access key in anti-clockwise direction (90°) and lock the shoot bolt to SCT access bar slot and then remove the test access key.

Figure 90 - Engaging the Shoot Bolt

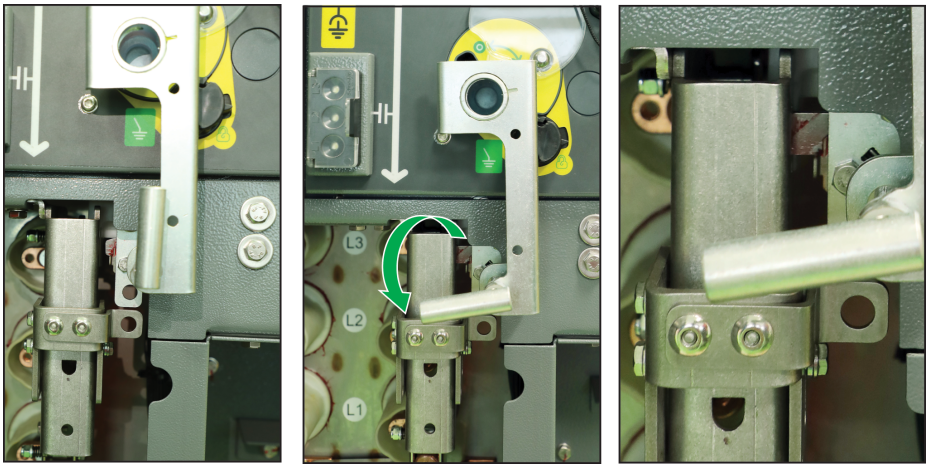

Circuit Breaker Auxiliary Tests

The following tests were conducted during the manufacturing process (except the CT insulation test and magnetization curve) and are provided as a reference for commissioning purposes:

- All secondary wiring has been subjected to a 1 kV insulation test at the factory.
- For on-site testing, it is recommended to use a 1000 V insulation megger to avoid overstressing the insulation.
- Disconnect all earth connections and test the wiring to earth.
- For units equipped with a VIP relay, refer to the VIP user guide (NRJED311206EN).

CT Ratio Test

Follow the below steps to perform the CT ratio test:

1. Remove both the fuses from the PCBA.
2. Connect the ammeter (0-5 A AC) across both the fuse terminals for L1, L3, and pin (5 and 4) of L2.
3. Select the CT ratio using 12 pin connectors as shown in Figure – CT Ratio Selection, page 31.
4. Connect the primary injection test equipment as shown in below Figure – Schematic Diagram of CT Ratio Test, page 101.
5. Close the disconnector and circuit breaker (respective ring switch mechanism) to Main ON.
6. Inject the CT primary current (200 A or 100 A or 50 A) in each phase in turn L1, L2 and L3.
7. Check that the indicated current on ammeter during each test, at CT rated primary current should display 5 A.

Figure 91 - Schematic Diagram of CT Ratio Test

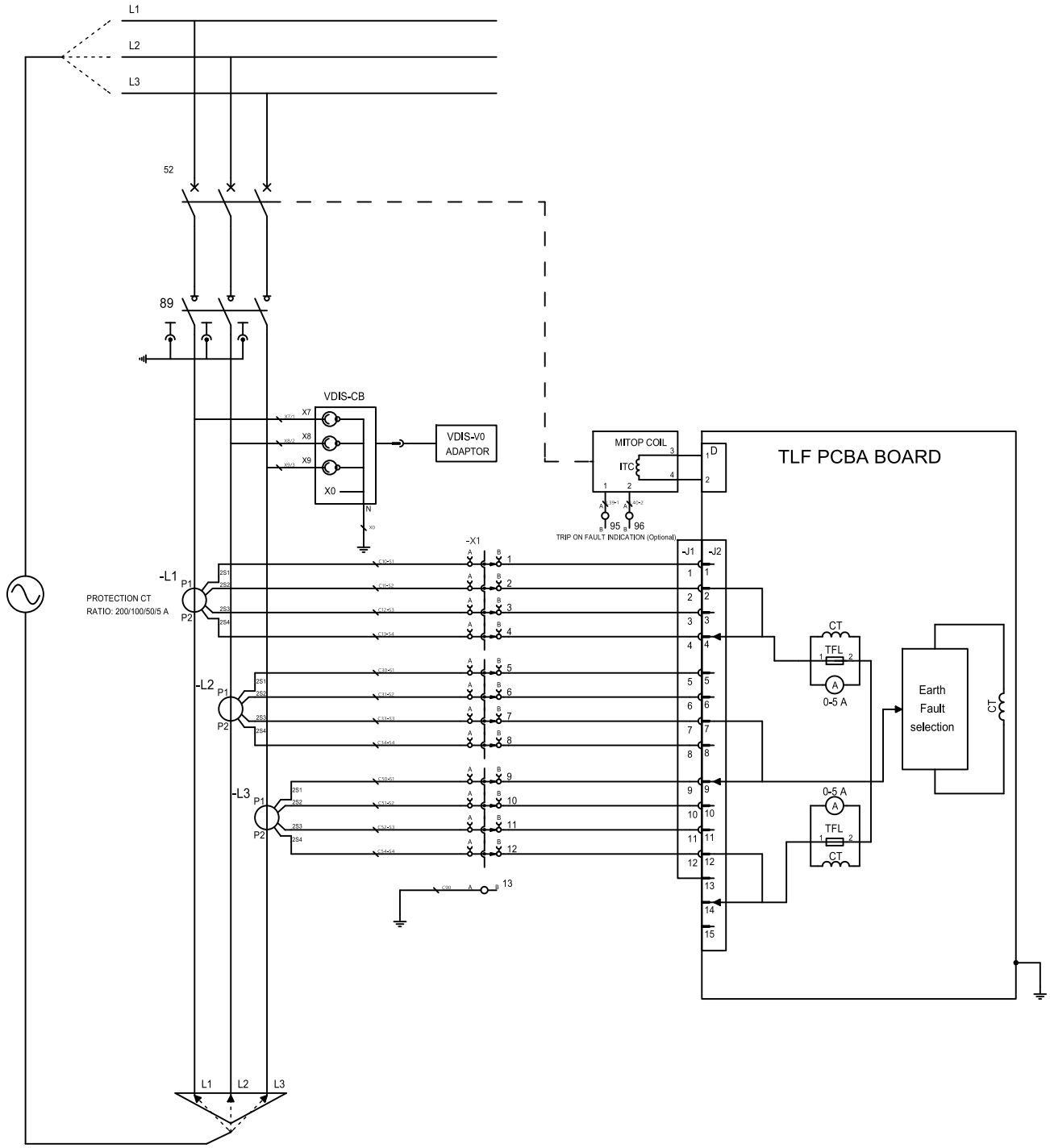

CT Polarity Test

Follow the below steps to perform the CT polarity test:

1. Remove both the fuses from the PCBA board.
2. Connect DC analog milliammeter/galvanometer across both the fuse terminals for L1, L2, and pin (5 and 4) of L2.
3. Select L1, L2 and L3 phase to be tested.
4. Connect the DC voltage source as shown in below Figure – Schematic Diagram of CT Polarity Test, page 103 to help ensuring correct polarity across main bushing with a switch.
5. Close the disconnector and circuit breaker (respective ring switch mechanism) to Main ON.
6. Close the switch S (Pulse).
7. Check that the DC milliammeter movement is in the positive direction.

   NOTE: If the DC milliammeter movement is in the negative direction the CT polarity is incorrect.

Figure 92 - Schematic Diagram of CT Polarity Test

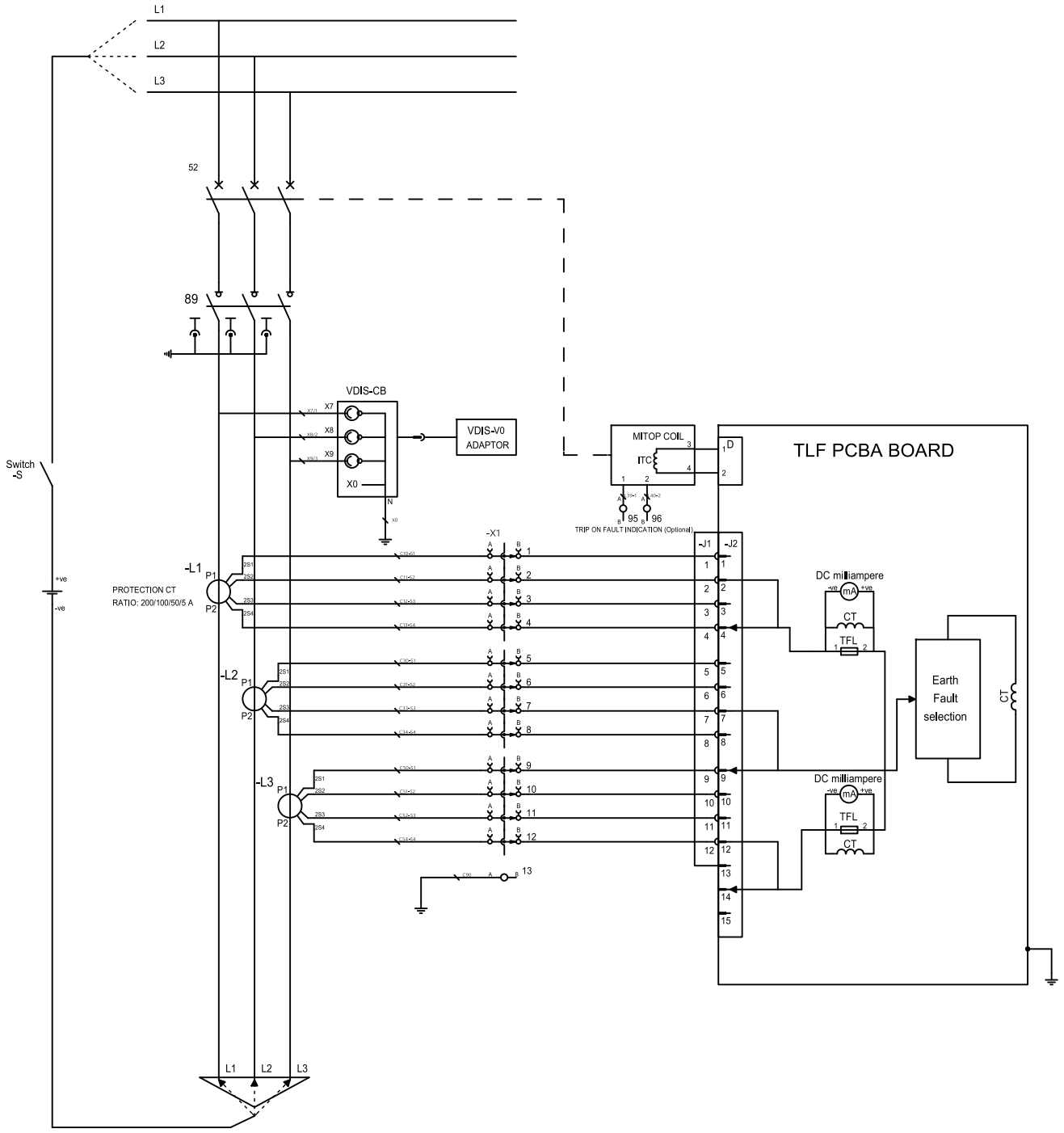

CT Spill Test

Follow the below steps to perform the CT spill test:

1. Replace L1 and L3 fuses with temporary shorting link.
2. Select the CT ratio using 12 pin connectors as shown in Figure –CT Ratio Selection, page 31.
3. Connect a milliammeter across terminal 5 and 4 of the 5 pin connector.
4. Select L1-L2, L2-L3, and L3-L1 phases to be tested.
5. Connect the primary injection test equipment as shown in below.
6. Close the disconnector and circuit breaker (respective ring switch mechanism) to Main ON.
7. Inject CT primary current and note down the milliammeter readings.
8. The spill current should be less than 10 mA during the test.
9. Repeat the test for remaining phases and CT ratio if required.

TLF/DAT Overcurrent Tests - Primary Current Injection

Follow the below steps to perform the TLF/DAT overcurrent test - primary current injection:

1. Select the required CT ratio using 12 pin connectors on the PCBA board.
2. Replace both the fuses with temporary shorting links on PCBA board.
3. Connect 3-phase shorting link (200 A rated) at L1, L2, and L3 connections of bushing.
4. Connect the primary injection test equipment as shown in below Figure – Schematic Diagram of TLF/DAT Overcurrent Tests - Primary Current Injection, page 106.
5. Close the disconnector and circuit breaker (respective ring switch mechanism) to Main ON.
6. Inject the CT primary current (200 A or 100 A or 50 A) in each phase in turn (L1-L2), (L2-L3) and (L3-L1).
7. Remove the temporary shorting links and check whether the breaker trips, refer to the below Table – Phases Under Test, page 105.
8. Repeat steps 1 to 7 for remaining parts of phases (and CT ratio if required).

Table 19 - Phases Under Test

Phases Under Test	Temporary Shorting Link		Circuit Breaker Action
	With Shorting Link	Without Shorting Link	
L1-L2	L1	L3	No Trip
	L3	L1	Trip
L2-L3	L1	L3	Trip
	L3	L1	No Trip
L3-L1	L1	L3	Trip
	L3	L1	Trip

Figure 93 - Schematic Diagram of TLF/DAT Overcurrent Tests - Primary Current Injection

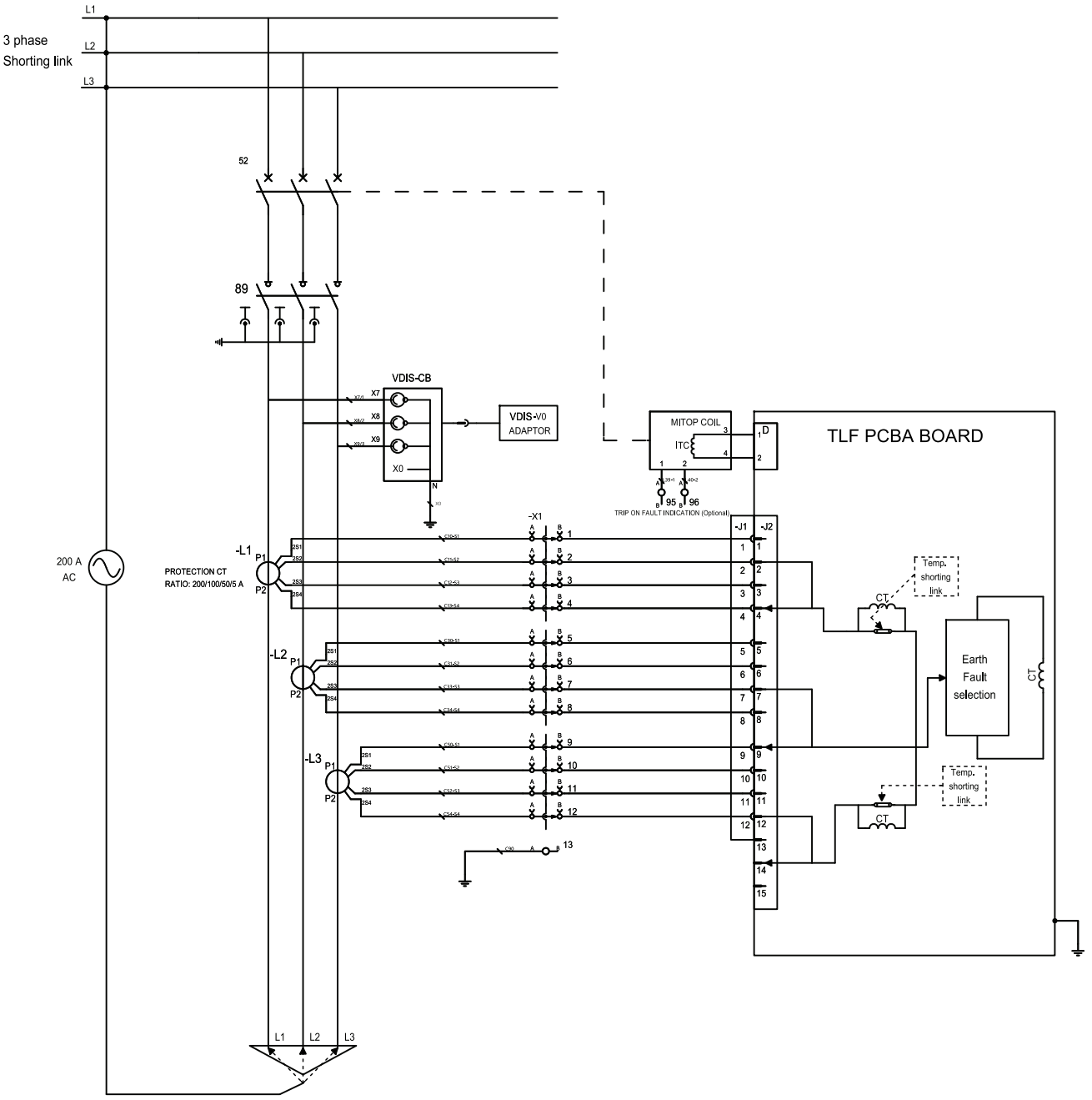

TLF/DAT Earth Fault Tests - Primary Current Injection

Follow the below steps to perform the TLF/DAT earth fault test - primary current injection:

1. Select the required CT ratio using 12 pin connectors on the PCBA board.
2. Replace both the fuses with temporary shorting links on PCBA board.
3. Connect 3-phase shorting link (200 A rated) at L1, L2, and L3 connections of bushing.
4. Connect the primary injection test equipment as shown in below Figure – Schematic Diagram of TLF/DAT Earth Fault Tests - Primary Current Injection, page 108.
5. Close the disconnector and circuit breaker (respective ring switch mechanism) to Main ON.
6. Select the earth fault sensitivity using the 2 pin connector as shown in Figure – Earth Fault Sensitivity, page 32.
7. Inject a primary current instantaneously (pulse) in accordance with the below Table – Range Phase Under Test, page 107, to help ensuring the correct actions result and the tripping levels are within the tolerance.
8. Repeat steps 1 to 7 for remaining parts of phases (and CT ratio if required).

Table 20 - Range Phase Under Test

Range Phase Under Test	CT Ratio	Trip Level (Earth Fault Sensitivity)			Circuit Breaker Action
		30%	50%	No Earth Fault	
L1	50/5 A	18–25 A	25–30 A	No Trip	Trip
L2					Trip
L3					Trip
L1	100/5 A	28–35 A	45–50 A	No Trip	Trip
L2					Trip
L3					Trip
L1	200/5 A	50–55 A	85–95 A	No Trip	Trip
L2					Trip
L3					Trip

Figure 94 - Schematic Diagram of TLF/DAT Earth Fault Tests - Primary Current Injection

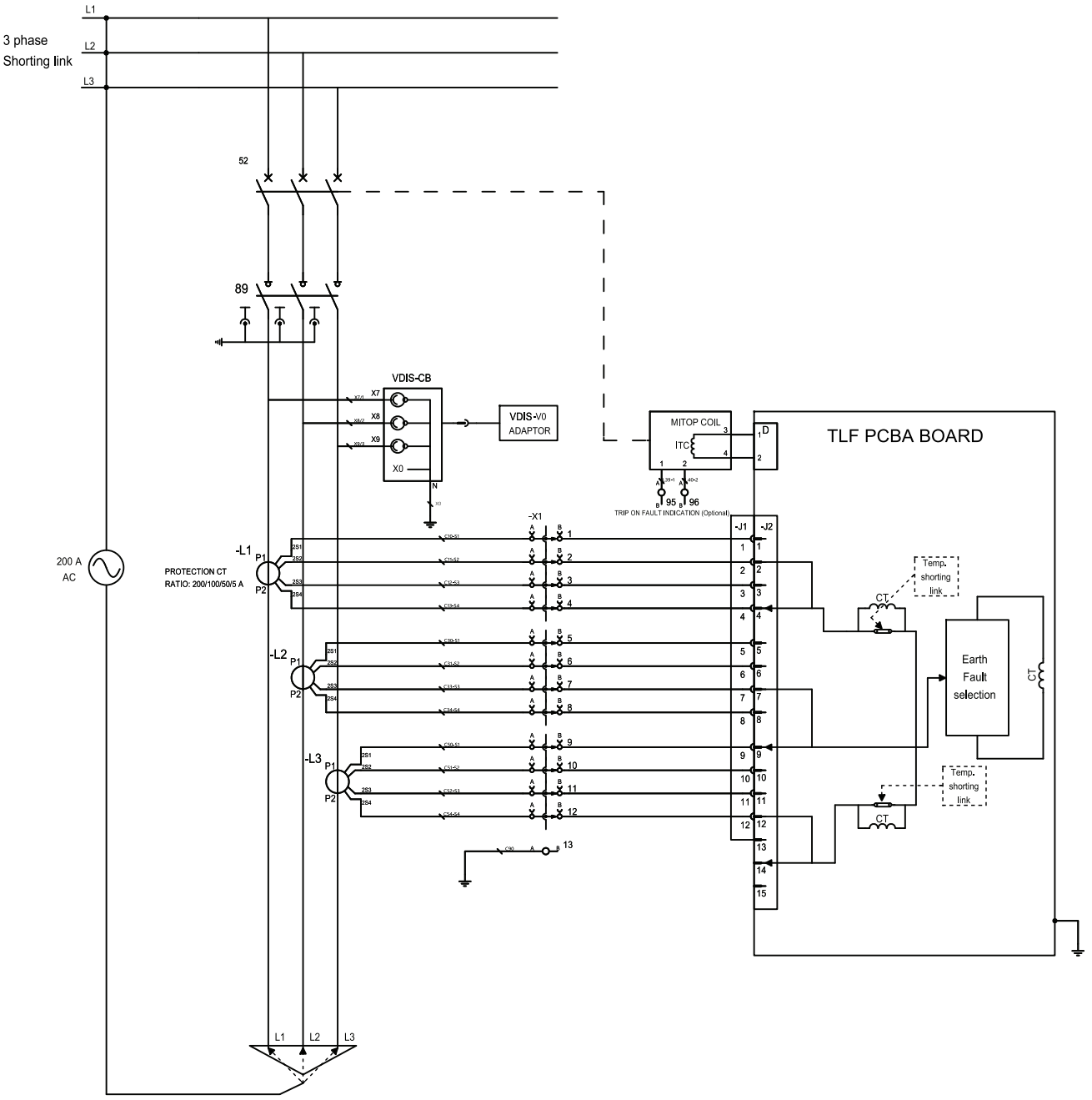

TLF/DAT Overcurrent Tests - Secondary Current Injection

Follow the below steps to perform the TLF/DAT overcurrent test - secondary current injection:

1. Select the required CT ration using 12 pin connectors on the PCBA board.
2. Replace both the fuses with temporary shorting links on PCBA board.
3. Connect the secondary injection test equipment as shown in below Figure – Schematic diagram of TLF/DAT Overcurrent Tests - Secondary Current Injection, page 110.
4. Close the disconnector and circuit breaker (respective ring switch mechanism) to Main ON.
5. Inject the CT secondary current 5 A in each phase in turn using the CT terminal block available in LV panel.
6. Remove the temporary shorting links and check whether the breaker trips, refer to the below Table – Phase Under Test, page 109.
7. Repeat steps 1 to 6 for remaining parts of phases (and CT ratio if required).

Table 21 - Phase Under Test

Phase Under Test	Temporary Shorting Link		Circuit Breaker Action
	With Shorting Link	Without Shorting Link	
L1-L2	L1	L3	No Trip
	L3	L1	Trip
L2-L3	L1	L3	Trip
	L3	L1	No Trip
L3-L1	L1	L3	Trip
	L3	L1	Trip

Figure 95 - Schematic diagram of TLF/DAT Overcurrent Tests - Secondary Current Injection

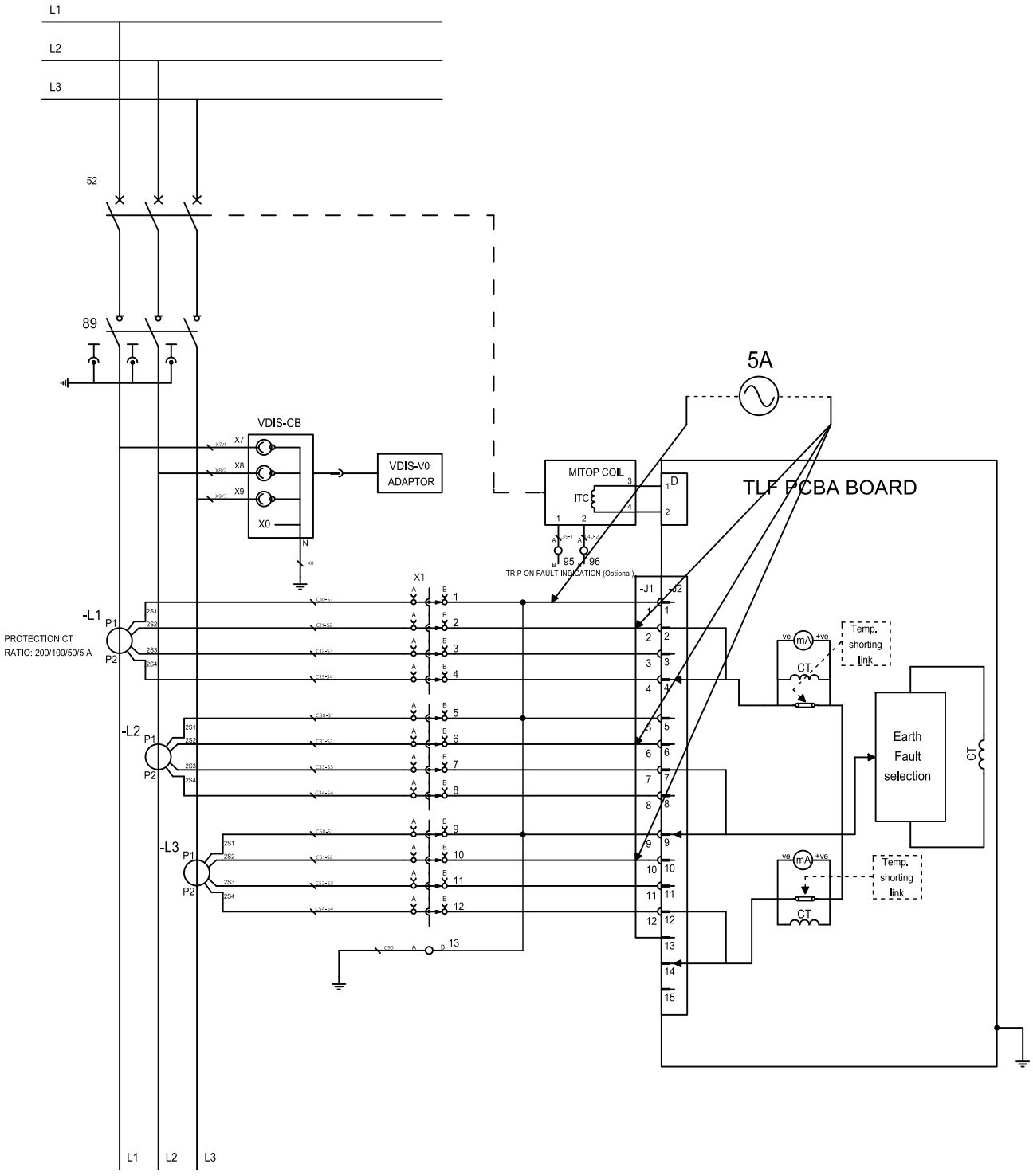

TLF/DAT Earth Fault Tests - Secondary Current Injection

Follow the below steps to perform the TLF/DAT earth fault test - secondary current injection:

1. Select the required CT ratio using 12 pin connectors on the PCBA board.
2. Replace both the fuses with temporary shorting links on PCBA board.
3. Connect the secondary injection test equipment as shown in below Figure – Schematic Diagram of TLF/DAT Earth Fault Tests - Secondary Current Injection, page 112.
4. Close the disconnector and circuit breaker (respective ring switch mechanism) to Main ON.
5. Select the earth fault sensitivity using the 2 pin connector as shown in Figure – Earth Fault Sensitivity, page 32.
6. Inject the CT secondary current 5 A in each phase in turn using the CT terminal block available in LV panel, accordance with the below Table – Range Phase Under Test, page 111, to help ensuring the correct actions result and the tripping levels are within the tolerance.
7. Repeat steps 1 to 6 for remaining parts of phases (and CT ratio if required).

Table 22 - Range Phase Under Test

Range Phase Under Test	CT Ratio	Trip Level (Earth Fault Sensitivity)			Circuit Breaker Action
		30%	50%	No Earth Fault	
L1	50/5 A	1.8–2.5 A	2.5–3.0 A	No Trip	Trip
L2					Trip
L3					Trip
L1	100/5 A	1.4–1.75 A	2.25–2.5 A	No Trip	Trip
L2					Trip
L3					Trip
L1	200/5 A	1.25–1.4 A	2.1–2.4 A	No Trip	Trip
L2					Trip
L3					Trip

Figure 96 - Schematic Diagram of TLF/DAT Earth Fault Tests - Secondary Current Injection

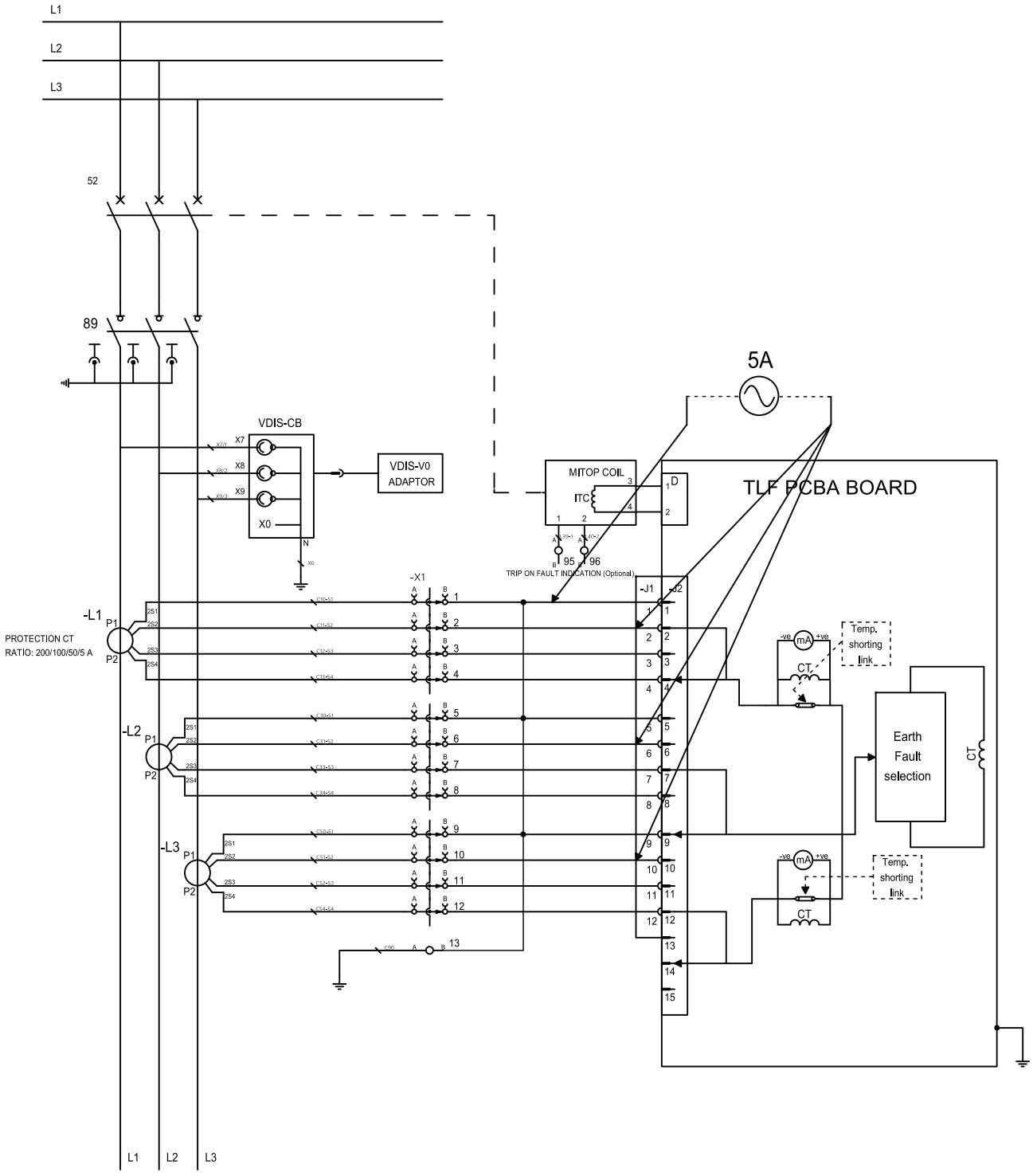

Integrated Cable Test Facility

Safety Provisions

⚠WARNING

HAZARD OF INCORRECT OPERATION

- Only qualified operator must perform the test and following safety regulations.
- Do not use any tools other than specified for integrated cable test facility.
- Do not loosen any screw, nut, element other than that provided for in this operation.

Failure to follow these instructions can result in death, serious injury, or equipment damage.

Cable Testing

Cable testing involves injecting a test voltage through a cable between two Ringmaster AirSeT units A and B.

Figure 97 - Cable Testing

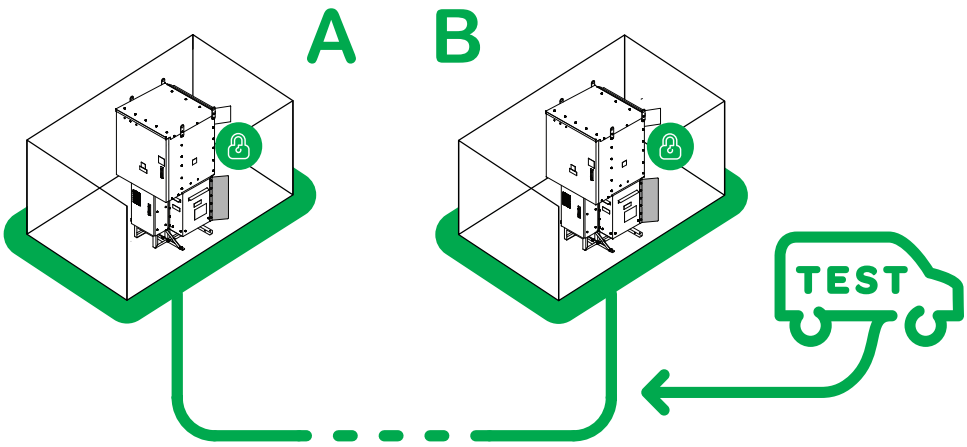

The main purposes of cable testing via voltage injection are:

- Ensuring the integrity of the cable between substation before energizing it.
- To locate a fault on a cable (or on a phase if more than 1 cable per phase).
- To diagnose and localize potential problems on a cable.

⚠WARNING

HAZARD OF INCORRECT OPERATION

Ensure the earth collector or one of the voltage injection fingers are not damaged, if damaged (bended, sheath damaged, or other), stop operations and contact the field service representatives.

Failure to follow these instructions can result in death, serious injury, or equipment damage.

The integrated cable test facility:

- Helps eliminate the need to open the connection compartment to access the cable connections.

- Provides a full interlock with the earthing switch.
- Facilitates the cable connection with specific injection fingers.

The integrated cable test facility is located at the front of the Ringmaster AirSeT unit.

Figure 98 - Cable Test Facility

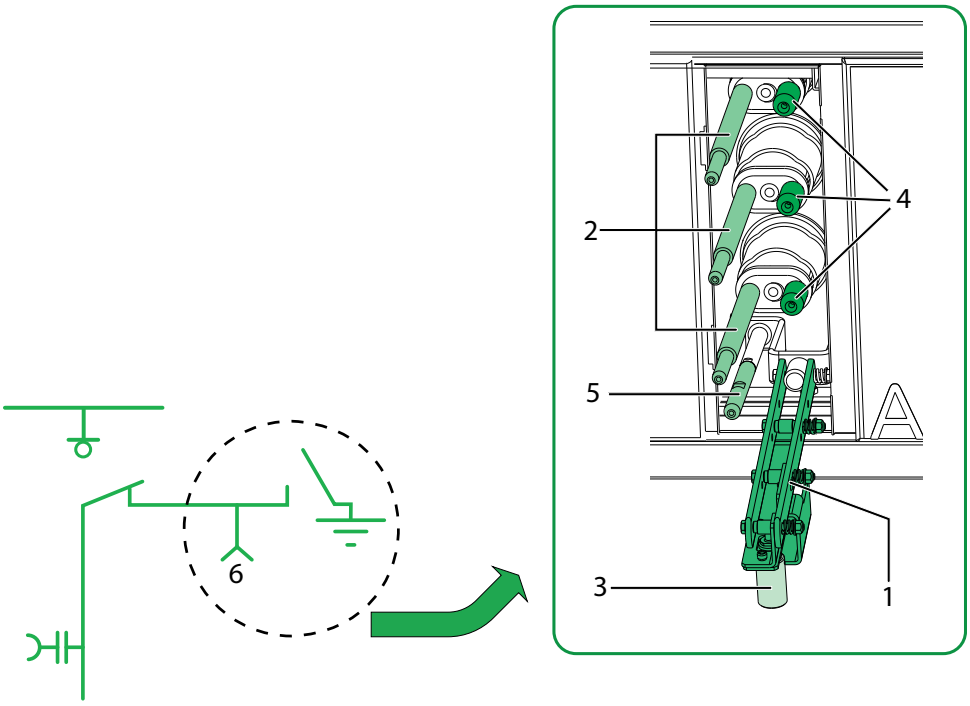

1	Withdrawable earth collector	4	Fixed contacts
2	Injection fingers	5	Earth finger
3	Earth collector locking knob	6	Injection point

Maximum Injection Voltage for Test Signal

NOTICE
HAZARD OF ELECTRICAL BREAKDOWN When testing the cable of the Ringmaster AirSeT, limit the voltage and duration as shown in the below Table – Voltage Test of Ringmaster AirSeT, page 114. **Failure to follow these instructions can result in equipment damage.**

Table 23 - Voltage Test of Ringmaster AirSeT

Test Voltage	Voltage per min
DC (positive/negative)	32 kV/15 min
VLF (Very Low Frequency)	22 kV/60 min

Discharging the Cables to the Earth

Figure 99 - Discharging the Cables to the Earth

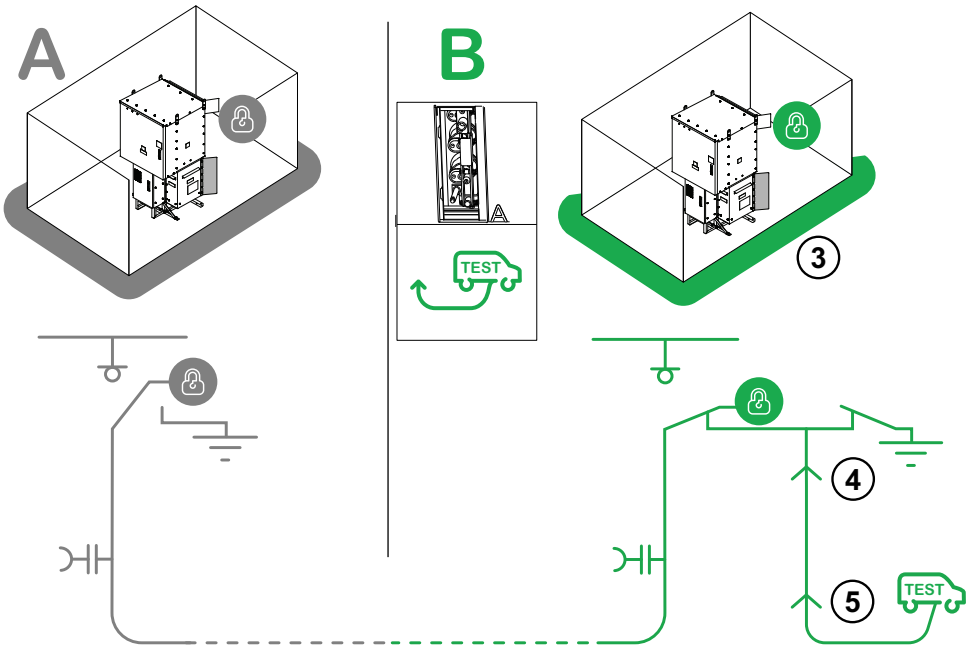

To set up the unit, proceed to the following steps:

Step 1: Ringmaster AirSeT A.

Open the main switch and padlock.

Step 2: Ringmaster AirSeT B.

Open the main switch and padlock.

Verify if the cable is out of voltage. If no, refer to the network operator company.

Close the earthing switch and padlock it.

Connecting the Integrated Cable Test Facility

⚠WARNING

HAZARD OF INCORRECT OPERATION

Do not open the earth collector before connecting the test equipment.

Failure to follow these instructions can result in death, serious injury, or equipment damage.

Figure 100 - Connecting the integrated Cable Test Facility

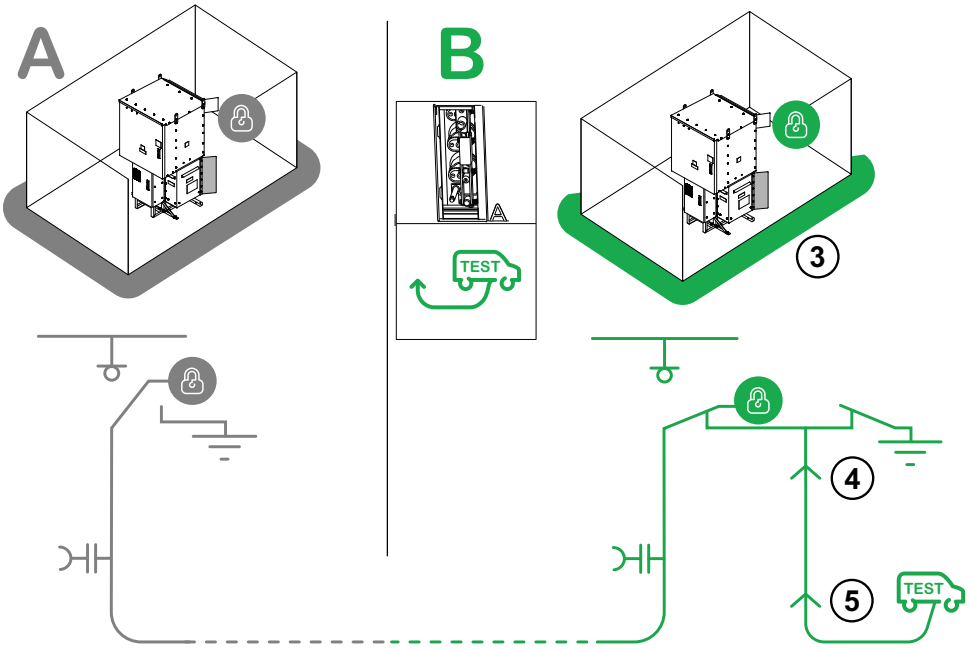

To set up the unit, proceed to the following steps:

Step 3: Manually open the integrated cable test facility door.

Step 4: Manually (no tool) screw the 4 injection fingers (earth and 3-phases).

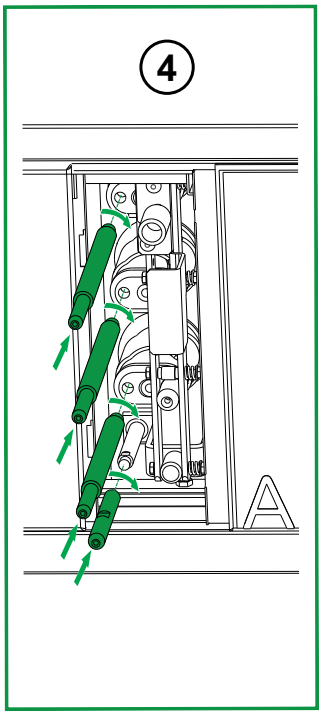

Step 5: Connect the cable from the test set to the injection fingers.

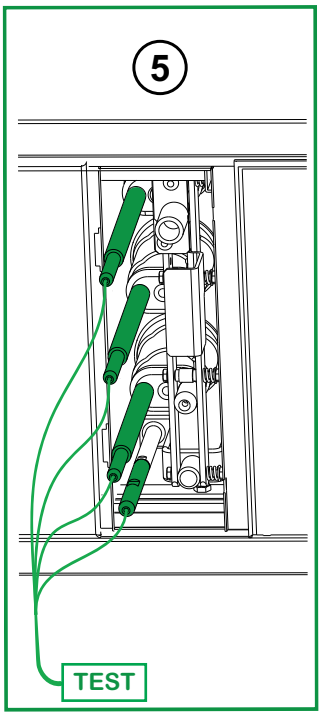

Maintenance

Recommendations and Conditions

Routine maintenance will depend on the conditions to which the unit is subjected and to the relevant codes and practice. Periodic inspection of the substation and equipment will be necessary to establish the conditions to which the units are subjected to.

Table 24 - Recommendations and Conditions

Maintenance	Ideal Conditions	Standard Conditions	Aggressive Conditions
Gas enclosure	No attention	No attention	No attention
Housing interior (mechos and so on.)	No attention	Periodic inspection	Every 5 years
Housing	Periodic inspection	Every 5 years	Every 2 years
Protection system	Every 5 years	Every 5 years	Every 5 years

Ideal Conditions

Unit installed and commissioned in accordance with the manufacturer's instructions. Following are the environmental conditions:

- Indoors, completely protected from the weather.
- Humidity below 40% and no dripping water.
- Minimal dust and air circulation.
- Ambient temperature between -25 °C to +40 °C.
- No contact with any chemical agents (for example, salt).
- No infestation of any animal life (for example, insects).
- No contact with any plant life (for example, mold).
- No earth movements.
- No damage to the unit of any kind.

Following are the operational conditions:

- No mal-operation of any kind.
- No abnormal high number of breaking operations.
- No abnormal high number of faults.
- No over-voltage or over-current (above rating).

Standard Conditions

Unit installed and commissioned in accordance with the manufacturer's instructions. Following are the environmental conditions:

- Unit installed and commissioned in accordance with the manufacturer's conditions.
- Humidity below 60%.
- Unit may be indoors or outdoors but must not be subjected to regular extremes of weather for example, heavy rain storms, dust storms, heavy snow and ice, flooding, temperature cycles greater than 55°C or less than -25°C, dense coastal fog or acid rain.
- No regular or thick covering of leaves or other debris.

- No contact with any chemical agents (for example salt).
- No infestation of animal or plant life.
- No earth movements.
- No damage to the unit of any kind.

Following are the operational conditions:

- No mal-operation of any kind.
- No abnormal high number of breaking operations graph.
- No abnormal high number of faults graph.
- No over-voltage or over-current (above rating).

Post Fault Maintenance

We recommend that after 50% of its rated fault operations, check the following:

- Gas pressure.
- Trip opening time.
- Contact resistance.

The maximum number of fault interruptions can be calculated from the interrupting capacity graph.

NOTE: Local legislation may dictate maintenance be carried out with greater frequency, irrespective of site conditions, contact Schneider Electric for further details.

Housing

Exterior

Follow the below steps to inspect the exterior of the unit:

- Check all the external fixings and labels are present, and the earth connections are tight.
- Check the main door and cable box for the heavy deposits of dust, ingress of water or contamination by animal or plant life.
- Clean the units thoroughly and touch up paint work as necessary.

Interior

Follow the below steps to inspect the interior of the unit:

- Open the main door.
- Check that the gas indicator is in the green zone.
- For circuit breaker unit check the electrical protection system.
- Check the operation of the unit and all mechanical interlocks.

Circuit Breaker

Leakage of Air

In the extremely unlikely event of an air leak, contact your local Schneider Electric office or UK customer service team immediately. Contact details can be found in the front of this document.

Service Life

If correctly installed and maintained the Ringmaster AirSeT has a service life expectancy of 30 years.

General Arrangement Drawings

The general arrangement drawings of different variants of Ringmaster AirSeT is shown below:

Figure 101 - RN2 AIR TLF/VIP TX Mounted - AF

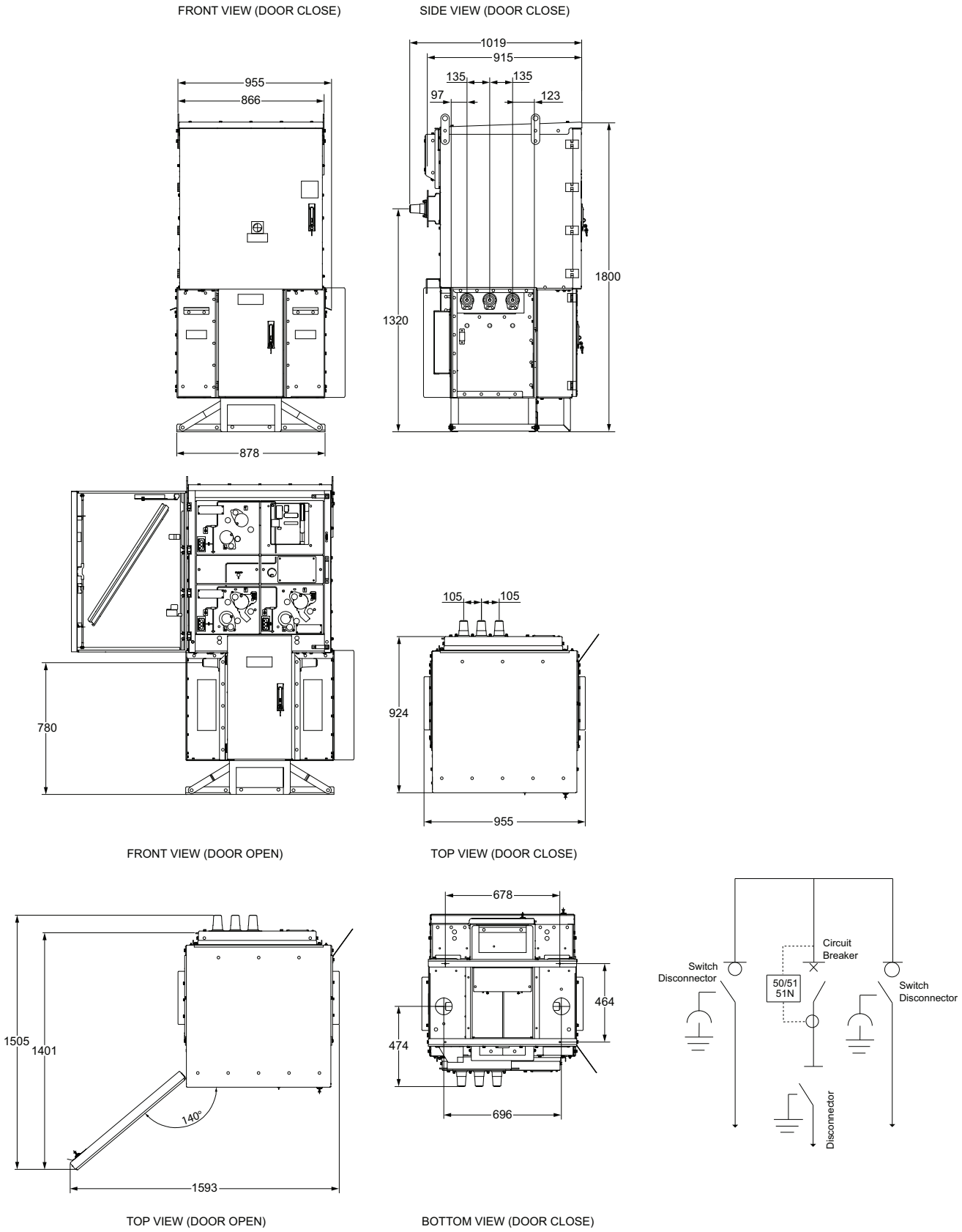

Figure 102 - RN2 AIR TLF/VIP TX Mounted - AF with Transformer Mounted Arrangement

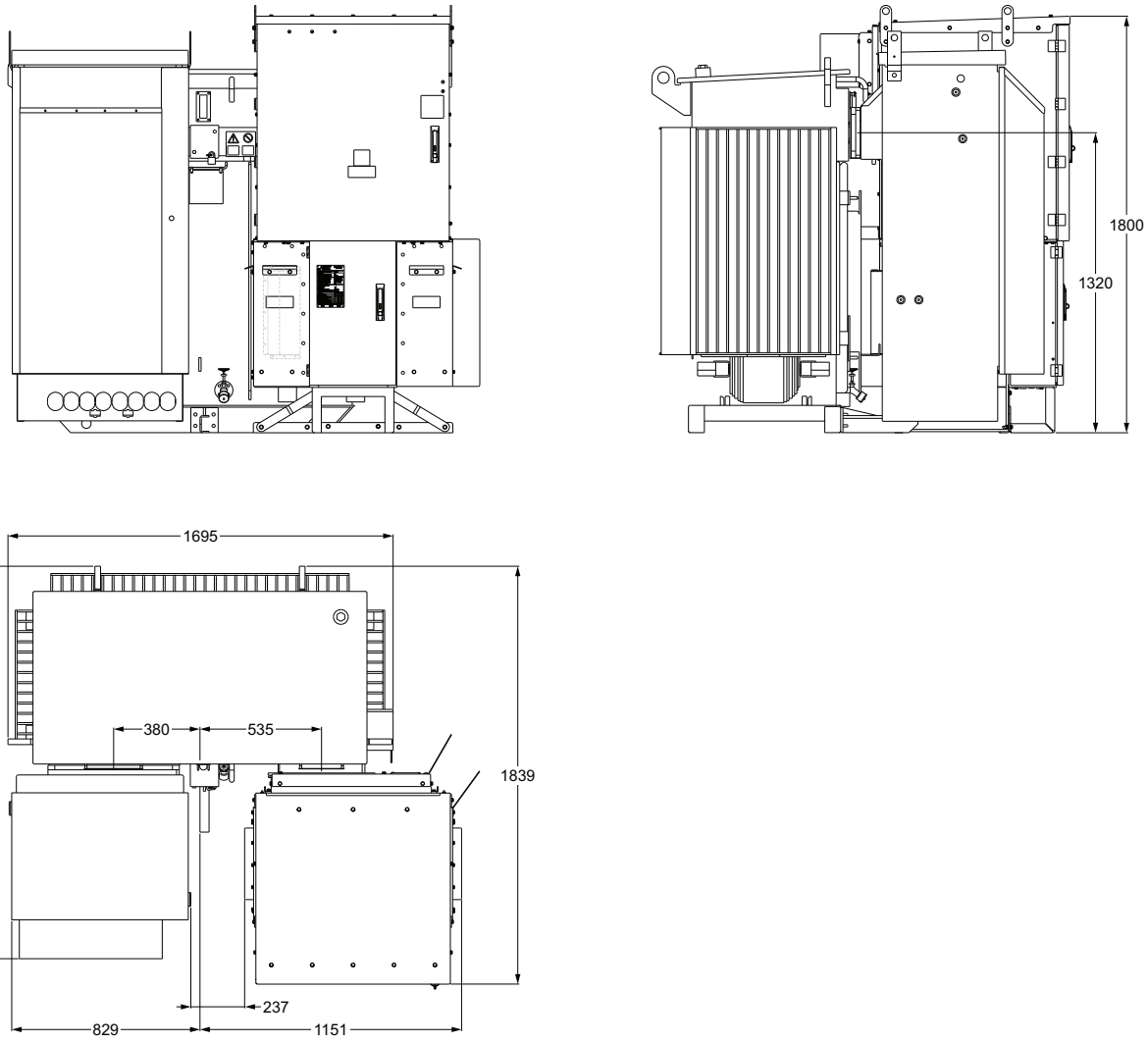

Figure 103 - RN2 AIR TLF/VIP Standalone - AF

FRONT VIEW (DOOR CLOSE)

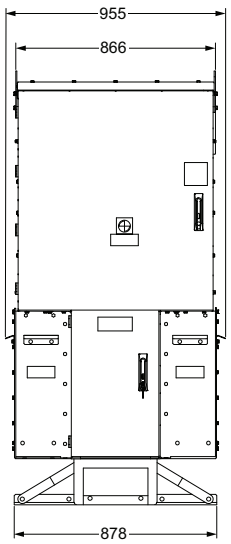

SIDE VIEW (DOOR CLOSE)

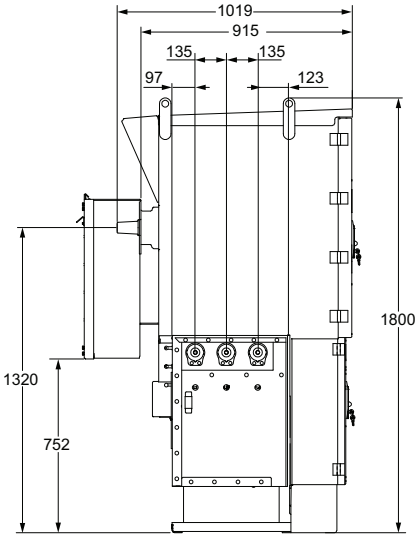

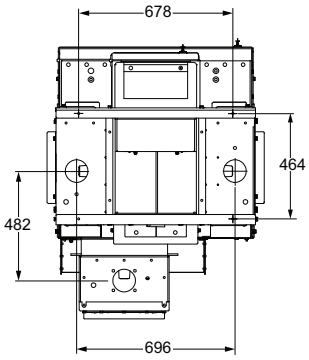

BOTTOM VIEW (DOOR CLOSE)

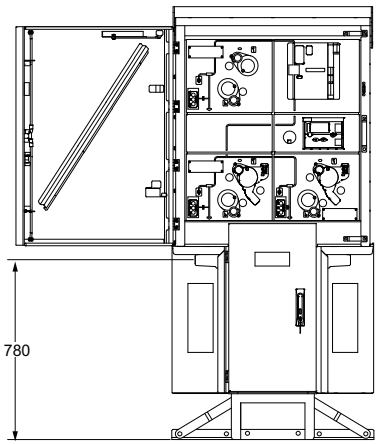

FRONT VIEW (DOOR OPEN)

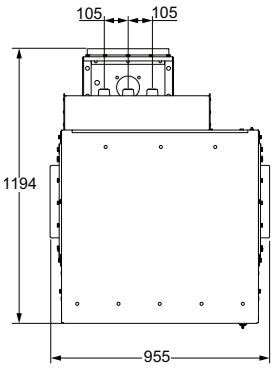

TOP VIEW (DOOR CLOSE)

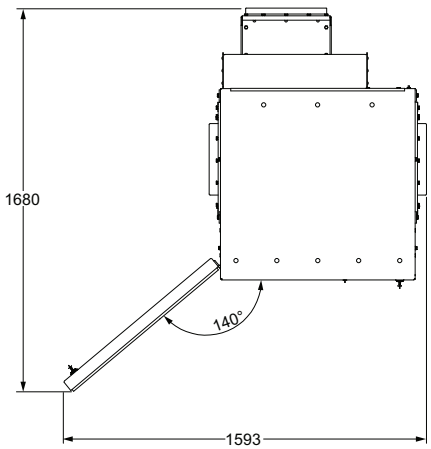

TOP VIEW (DOOR OPEN)

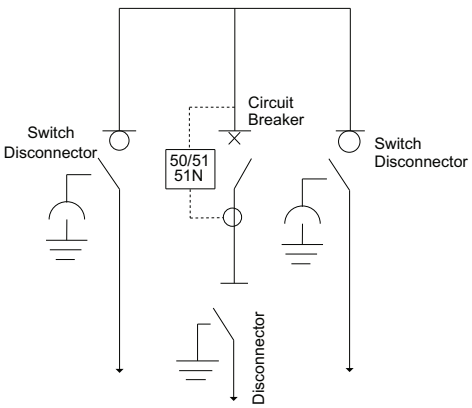

Figure 104 - RN2 AIR TLF/VIP Standalone- AF - T300

FRONT VIEW (DOOR CLOSE)

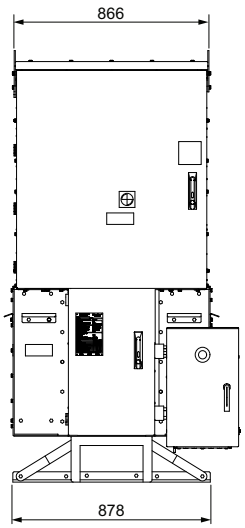

FRONT VIEW (DOOR OPEN)

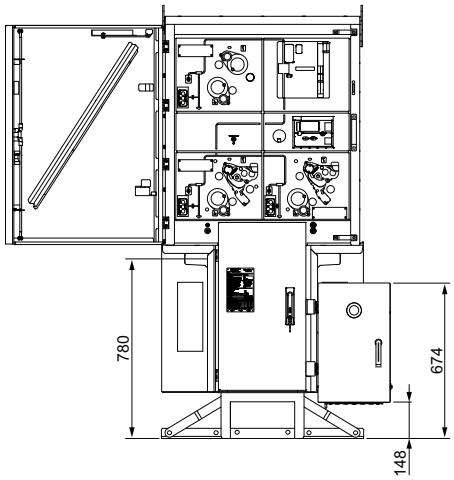

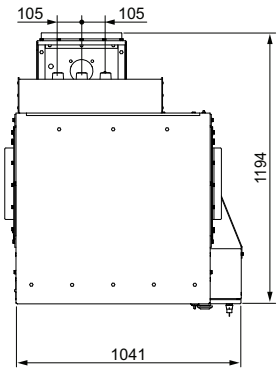

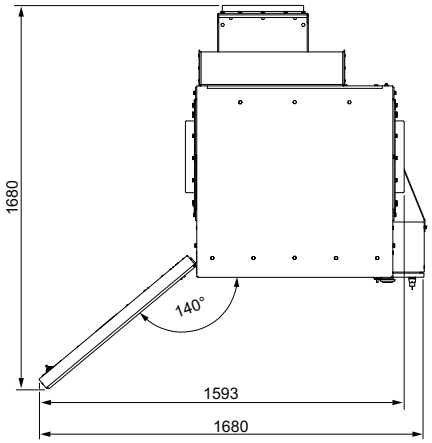

TOP VIEW (DOOR CLOSE)

TOP VIEW (DOOR OPEN)

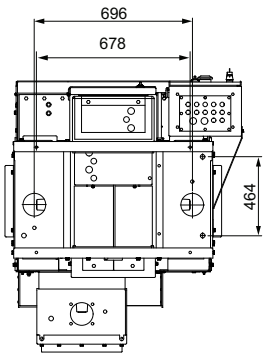

BOTTOM VIEW (DOOR CLOSE)

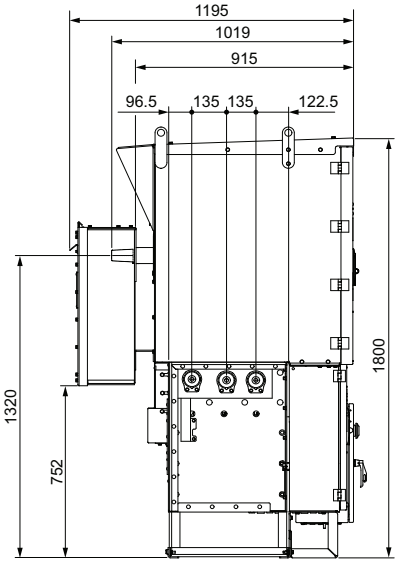

SIDE VIEW (DOOR CLOSE)

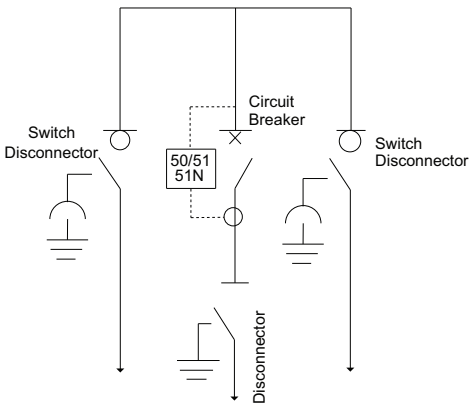

Glossary

C

CT: Current Transformer

D

DAT: Direct Acting Trip

DT: Definite Time

E

E/S: Earthing Switch

F

FRTU: Feeder Remote Terminal Units

H

HV: High Voltage

I

IDMT: Inverse Definite Minimum Time

M

MV: Medium Voltage

R

RMU: Ring Main Unit

RS1: Ring-Switch 1

RS2: Ring-Switch 2

S

SCT: Switch Cable Test

T

TLF: Time Limit Fuse

U

UMI: User-Machine Interface

V

VCB: Vacuum Circuit Breaker

VDIS: Voltage Detecting and Indicating System

VIP: Voltage and Current Protection

VO: Voltage Output

Schneider Electric
35 rue Joseph Monier
92500 Rueil Malmaison
France

+ 33 (0) 1 41 29 70 00

www.se.com

As standards, specifications, and design change from time to time, please ask for confirmation of the information given in this publication.

© 2025 Schneider Electric. All rights reserved.

BRU9950900-00